35FB-R.3012.A

100－36－001

Nikon FE

ニコン FE

REPAIR MANUAL

修 理 指 針

NIPPON KOGAKU K.K.

Tokyo, Japan

6247

Printed in Japan

(78. 2. c) H

Section I. Specifications & Mechanism

Content

(1) 外 観 図 Figure of external

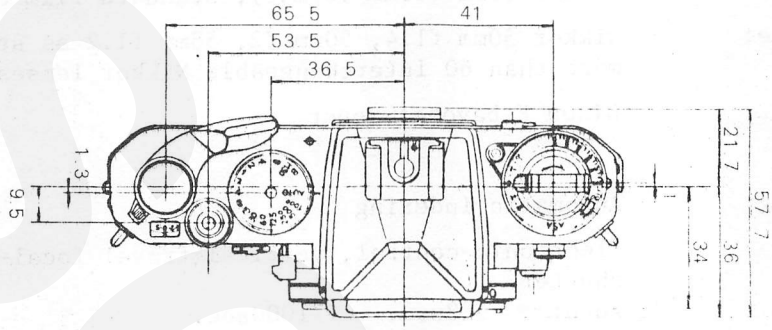

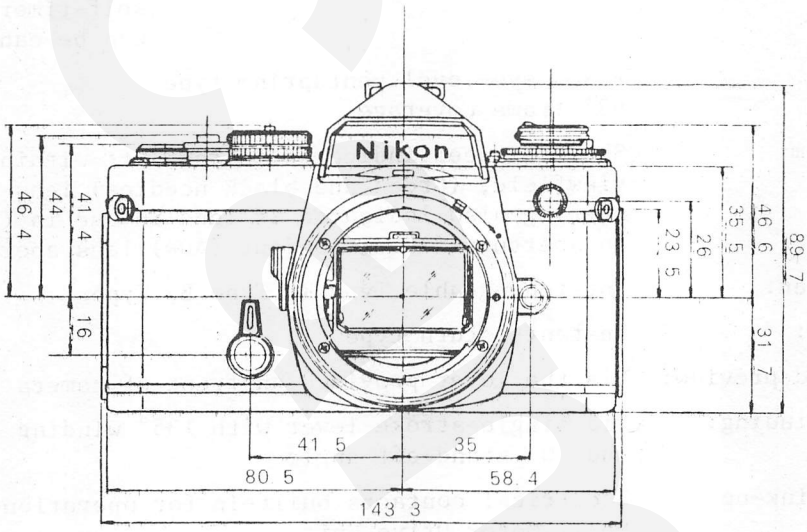

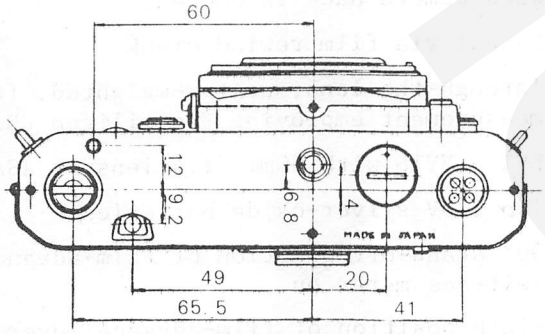

Specifications

Type of camera:	35mm single lens reflex camera
Picture format:	24mm x 36mm (35mm format); standard film cartridge
Lenses available:	Nikkor 50mm f1.4, 50mm f2, 55mm f1.2 as standard; more than 60 interchangeable Nikkor lenses in all
Lens mount:	Nikon F bayonet mount
Lens maximum aperture setting:	Automatic indexing
Shutter:	Electronic-control, vertical-travel focal-plane shutter Auto: 8sec. - 1/1000sec. Manual: B M90 (1/90 second); Mechnically controlled Built-in self-timer (Setting can be cancelled)
Viewfinder:	Fixed eye-level pentaprism type 93% frame coverage
Viewing system:	Shutter speed indicated to the left within the viewfield; (Green and black needles) lens aperture setting also indicated if lens in use is fitted with an aperture-direct-readout (ADR) lens aperture.
Focusing screen:	Interchangeable Type K, Type B, Type E
Reflex mirror:	Instant-return type
Depth-of-field preview:	Via the lever provided on front of camera
Manual film winding:	Via single-stroke lever with 135° winding angle and 30° stand-off angle
Motor drive link-up:	Electrical contacts built-in for operation with MD-11 Motor Drive Unit
Multiple exposures:	Via multi-exposure lever
Frame Counter:	Additive type; automatically resets to "S" when camera back is opened.
Film rewinding:	Manual via film rewind crank
Exposure metering:	Through-the-lens, center-weighted, full-aperture measurement employing two silicon photodiodes
Metering range:	EV1 - EV18 with 50mm f1.4 lens at ASA100
Power Source:	Two 1.5V silver-oxide batteries
Power switch:	30° stand-off position of Film-advance lever switches meter on
MD connecting switch:	Flush position of film-advance lever switches on
Battery checking:	Battery power is sufficient if the checker lamp glows
Film speed scale:	Settings provided for ASA12 - 4000
Exposure compensation range:	+2 - -2EV, Except maximum and minimum aperture settings at ASA12 or ASA4000

Memory Lock:	Via self-timer lever
Flash synchronization:	Built-in ISO-type hot-shoe contact with safety switch and ready light contact for synchronization with electronic flash units at speeds 1/125 - 8, M90, B. Synch terminal provided (JIS-B threaded type)
Ready-light lamp:	SB-10 combination Auto: The lamp lights up when SB-10 fully charged (Shutter speed becomes approx. 1/90sec.) Manual: 1/125 - B, The lamp lights up when SB-10 fully charged Manual: 1/250 - 1/1000, The lamp flickers on and off when SB-10 fully charged
Camera Back:	Hinged, swing-open type; detachable; memo holder provided
Dimensions:	143.3mm x 57.7mm x 89.7mm
Weight:	Approx. 590g (body only)

(2) Meter coupling system

Nikon FE's meter coupling system, same as that of Nikon FM or Nikon EL2, ensures the automatic maximum aperture indexing as soon as an AI-type Nikkor lens is mounted on the camera.

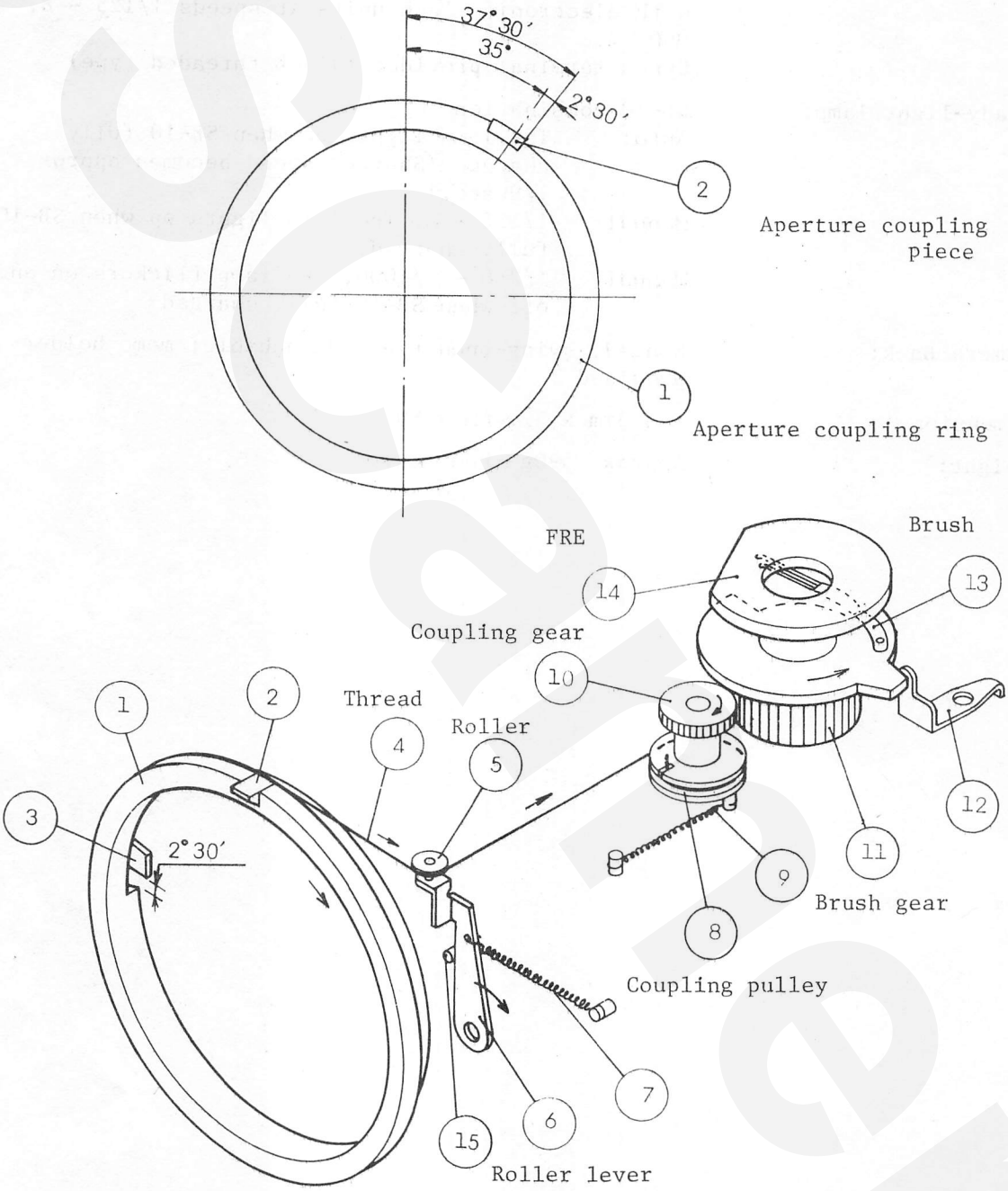

When the lens is mounted onto the camera body without pressing back aperture Coupling piece ②, lens' meter coupling ridge contacts aperture Coupling Piece ②. Thread ④, fixed onto aperture Coupling ring ① at one end and onto Coupling pulley ⑧ incorporated with Coupling gear ⑩ on the other end, is pulled by Spring ⑨ on Coupling pulley ⑧ so as to rotate ① clockwise.

Coupling gear ⑩ engages with Brush gear ⑪ on which Brush A ⑬ is installed, and Brush A ⑬ contacts FRE ⑭.
The rotation of Brush gear ⑪ to the arrow direction is stopped by Brush gear stopper ⑫ where Brush gear ⑪ engages with Brush gear stopper ⑫.
Roller ⑤ is installed free to rotate on Roller lever ⑥ which is pulled by Roller lever spring ⑦ of smaller tension than that of Spring ⑨.

When lens dismounted, Aperture coupling ring ① rotates back to the arrow direction pulled by thread ④ via Spring ⑨ and Coupling pulley ⑧.
When the right end of Aperture coupling piece ② locates at 35 degrees from the camera's vertical center line, Brush gear ⑪ engages with Brush gear stopper ⑫ and stops, simultaneously stopping Coupling gear ⑩ and Coupling pulley ⑧.
At this stage, however, there still remains a clearance of 2°30' (corresponding to 1/3 stop) between Aperture coupling ring ① and Coupling ring stopper ③, and thus Aperture coupling ring ① will further rotate to the arrow direction pulled by Roller lever spring ⑦ via ⑥⑤ and ④.

When the lens is mounted, as soon as ① starts to rotate, ⑥ fitted with ⑦ rotates 2°30' until ⑥ comes in contact with ⑮. Further rotation of ① will rotate ⑪ and ⑬ via ④, ⑧ and ⑩, thus charging the electrical resistance of FRE ⑭.
Aperture coupling piece ② contacts lens' meter coupling ridge at a position of 37°30' in case of f1.2 or f1.4 lens set at maximum aperture, while ② contacts at a position of 35° in case of lenses of wider maximum aperture such as f1.8.

Operational sequences

lens' aperture ring

② — ① — ④ — ⑤ — ⑥ — ⑧ — ⑩ — ⑪ — ⑬

⇓

Compensation of 1/3 stop

(4) Exposure Control Circuitry System

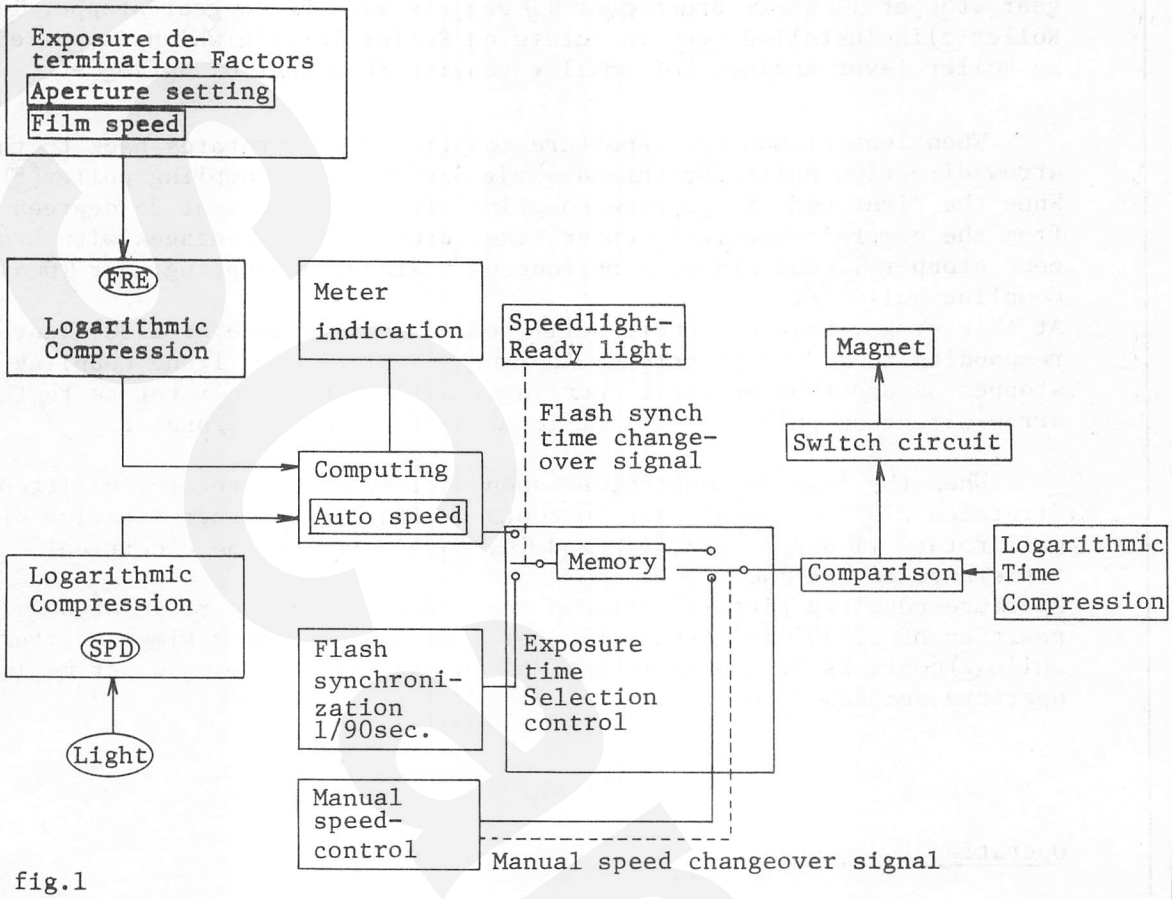

fig.1

First, the informations of film speed and aperture setting in use will be transmitted to FRE and registered as a change of resistance. Then, the resistance will be logarithmically compressed to a voltage change. The other information of light intesity will be registered as photo electric current by silicone photo Diode(SPD) positioned in the optical path in the viewfinder. The photo electric current will be also logarithmically compressed to a voltage change corresponding to the current. The voltages in two logarithmic compression circuits will be transmitted to computing circuit, where the voltage corresponding to the shutter speed for proper exposure will be determined. Consequently, meter needle swings indicating the shutter speed selected inside the viewfinder.

These circuits will be switched on by pulling out film-advance lever to a stand-off position, uncovering a red dot. In case of extremely low brightness out of the measureable range, the voltage, logarithmically compressed from photo electric current, will be detected by "Low-brightness standard voltage" in computing circuit, and the meter needle will swing into the "B" zone, thus warning the brightness to be out of the measurable range.

When the shutter release button is depressed, the mirror starts to rise. While the Mirror rising, the optical path will be cut, thus preventing the light from reaching SPD in the optical path in the viewfinder. Therefore, the information of light intensity immediately before mirror rising, that is, voltage transmitted from computing circuit should be memorized in the memory circuit.

As soon as the mirror starts rising, mirror switch in the shutter speed control circuit switches on. Then, as soon as the first shutter curtain starts to travel, the logarithmic time compression circuit functions, condensing the voltage as long as the shutter opens. Then, when the voltage, transmitted from the logarithmic time compression circuit amounts equal to the voltage determined in the memory circuit, signal will be sent from comparison circuit to switch circuit. Consequently, the magnet current holding the second shutter curtain will be switched off, thus closing the shutter curtains' opening. This is the shutter speed control system to provide proper exposure on the film.

When making flash photography with Nikon speedlight SB-10 setting the shutter dial at Auto, proper shutter speed (1/90sec) to synchronize with SB-10 will be automatically selected as soon as SB-10 powers on. To provide this automatic flash synchronization, exposure time selection control circuit is incorporated, which selects auto-speed voltage in computing circuit, flash-synchronization-speed voltage determined by speedlight power switch signal or manual speed voltage.

Exposure time selection control circuit

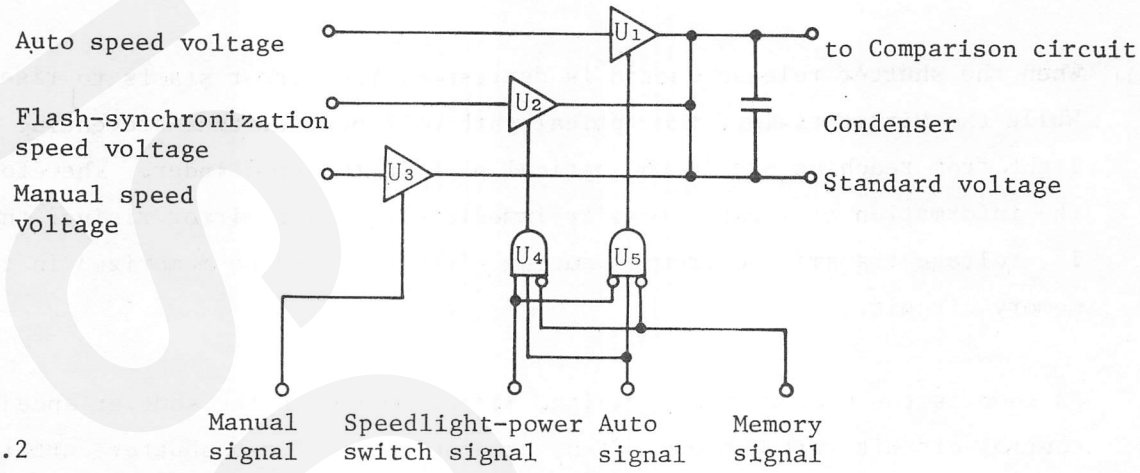

fig.2

U1, U2 and U3, analogue switches, functions as buffer amplifier when control terminal is high, and perform switch functioning to make the output impedance infinity when control terminal is low. U4 and U5 are AND circuits.

Therefore, as illustrated in Figure 2, Auto speed voltage, flash synchronization speed voltage or Manual speed voltage will be selected by auto signal, speedlight power switch signal or manual signal respectively, and transmitted to comparison circuit. Note that Auto speed voltage and flash synchronization speed voltage will be memorized into condenser by memory signal immediately before mirror rising or memory-lock operation.

Further, with this circuit incorporated, ready light LED glows on and off to warn if the shutter dial is set at the non-synchronizing manual speed. This warning system is possible by inputting the manual shutter speed signal of 1/1000 - 1/250sec. which does not synchronize with AND circuit, and the oscillator of 2 Hz. Inputting the both will turn ON and OFF a transistor and let the ready light LED glows on and off. At the slower Manual speed than 1/250sec., transistor turns off, thus turning the LED on to indicate proper synchronization.

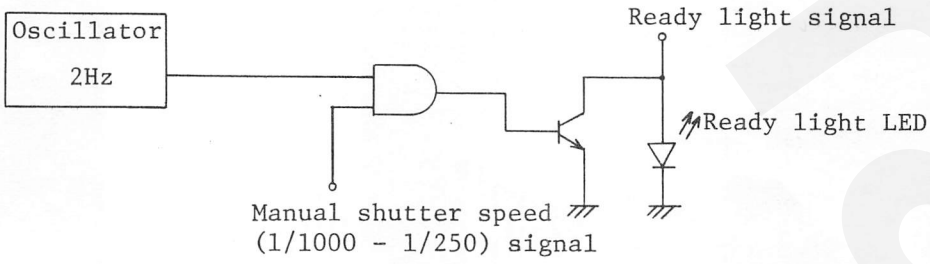

fig.3

Battery check system

To enable the aforementioned exposure control, battery check system is incorporated as illustrated in Figure 4.

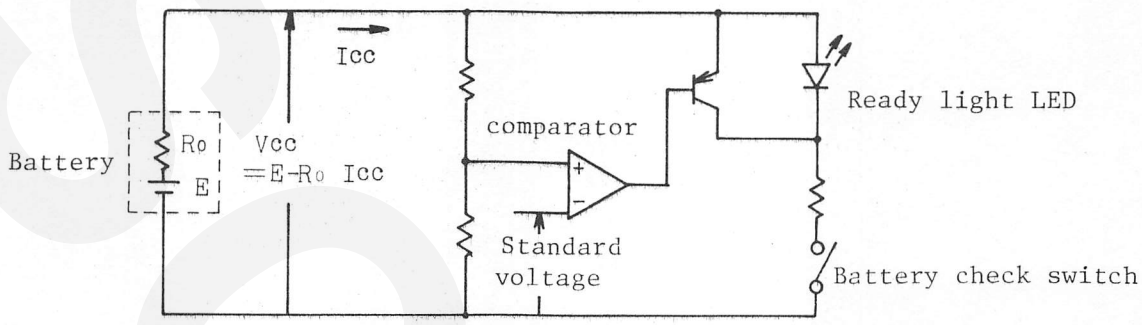

fig. 4

When battery is drained out, battery check switch turns on, thus extinguishing ready light LED. To ensure the LED extinguishment, transistor connected to the LED will be turned on and consumption current (Icc) will be increased. As a result, the voltage determined by Icc and inner resistance of battery (Ro) will be accordingly increased, thus providing hysterisis with Vcc and ensuring the positive extinguishment of ready light LED.

Current consumption	Metering exposure(EV9, ASA100, F5.6)	approx·2mA
	Shutter running (Room temperature 3V)	approx·12mA
Checker-off voltage	2.25 ±0.15V	

Uscamera

Section II. Part List

Content

Note: 1) Nikon FE camera consists of the following two product code
35FB .....Parts exclusively used for Nikon FE
P33FB .....Parts commonly used for Nikon FE and Nikon FM

2) All parts incorporatted in Nikon FE are shown as 35FB parts or P33FB parts in this section.

3) Be sure to fill the part order form clarifying the parts for 35FB or for P33FB. Also, careful attention is required for part control and order quantity because of two different prodcut code available.

Unscanned

正誤表（変更部分は後記の部品表、部組品表に各自後記入下さい）
Errata (Be sure to rewrite the parts list accooding to these lists at your end.)

35FB — R.3012.A

頁 Page	部番 Part No.	訂正箇所 Revised Portion	誤 Error	正 Correction
Ⅱ 50 Ⅲ 26	P33FB #802	部組品No. Subassembly No.	F	削除 to be deleted
		販売区分 Term of Sale	○△	△
Ⅱ 31—1	P33FB#38	個数 Pcs. per Unit	2	1
Ⅱ 32	P33FB#54	販売区分 Term of sale	○	○△
Ⅱ 35	P33FB #285—1	販売区分 Term of sale	△	○△
Ⅱ 35	P33FB #286—1	販売区分 Term of Sale	△	○△
Ⅱ 35	P33FB #291A	名称 Name	ミラー調整座金 Washer, mirror-adjusting	係止レバー調整座金 Latch lever washer
Ⅱ 44	P33FB #497	販売区分 Term of Sale	○△	△
Ⅱ 47	P33FB #661—1	専用部品 Exclusive part	P33FB#661—1	35FB#661—1
Ⅱ 52	P33FB #825A	販売区分 Term of Sale	○△	△
		部組品No. Subassembly No.	B×2	削除 to be deleted
Ⅱ 51 Ⅲ 12, 18	P33FB#822 #829	専用部品 Exclusive part	P33FB#822 P33FB#829	35FB#822 35FB#829
Ⅱ 54	P33FB #857	個数 Pcs. per Unit	1	2
		部組品No. Subassembly No.		B
		販売区分 Term of Sale	○	○△
Ⅱ 54	P33FB #856	販売区分 Term of Sale	○	○△
Ⅱ 25, 26 27, 28, 29 57, 58		訂正 Revision	参照図番 Reference Fig. No.	参照頁 Reference page
Ⅱ 27	35FB F	名称 Name		FRE

訂正表 List of revision

頁 Page	部番 Part No.	変更内容 Reason of revision	現 Former	新 New
Ⅱ 3	35FB #36	廃止 Discontinuation		
Ⅱ 8	35FB #230	廃止 Discontinuation		
Ⅱ 9	35FB #250	販売区分 Term of sale	○△	△
		部組品No. Subassembly No.		B39
Ⅱ 9	35FB #252A	販売区分 Term of Sale	○	△
		部組品No. Subassembly No.		B39

訂 正 表 List of revision

35FB — R.3012.A

頁 Page	部番 Part No.	変更内容 Reason of revision	現 Former	新 New
Ⅱ 25 Ⅲ 6, 7	35FB All	共通化 Common use	35FB All	P33FB All
			#135, #126	削除 to be deleted
Ⅱ 17 Ⅲ 12	35FB #652	図訂 Re-designed	#652	#652—1
Ⅱ 17	35FB #654	共通化 Common use	35FB#654	P33FB#654—1
Ⅱ 17 Ⅲ 12	35FB #655	図訂 Re-designed	#655	#655—1
Ⅱ 18 Ⅲ 12	35FB #665	図訂 Re-designed	#665	#665—1
Ⅱ 19	35FB #685	図訂 Re-designed	#685	#685—1
Ⅱ 23	35FB #948 追加 Addition	名称 Name		F窓遮光テープ, F-scale mask shield tape
		個数 Pcs. per Unit		1
		販売区分 Term of Sale		○△
		部組品No. Subassembly No.		B30
Ⅱ 28	L	廃止 Discontinuation		
Ⅱ 30	P33FB #21	専用化 Exclusive use	P33FB#21	35FB#21
Ⅱ 30	P33FB #23	専用化 Exclusive use	P33FB#23	35FB#23
Ⅱ 33 Ⅲ 2	P33FB #72	廃止 Discontinuation		
Ⅱ 34 Ⅲ 18	P33FB #255	販売区分 Term of Sale	○△	△
Ⅱ 37	P33FB #352—1	販売区分 Term of Sale	△	○△
Ⅲ 24		イラストにNo.を記入 Be sure to add P/N 352—1 as illustrated.	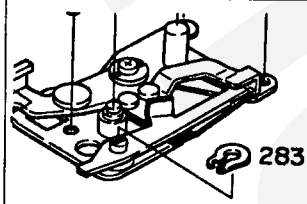	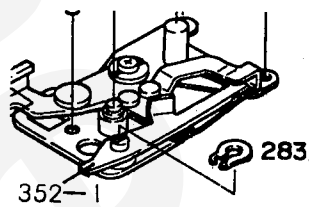
Ⅱ 37	P33FB #375	販売区分 Term of Sale	△	○△
Ⅱ 39	P33FB #401B	廃止 Discontinuation		
Ⅱ 39	P33FB #401	図訂 Re-designed	#401	#401—1
Ⅱ 39 Ⅲ 4	P33FB #405	図訂 Re-designed	#405	#405—1
Ⅱ 38 Ⅲ 2	P33FB #406	図訂 Re-designed	#406	#406—1
Ⅱ 13 Ⅲ 2	35FB #403	共通化 Commom use	35FB#403	P33FB#403—1

IMPORTANT!

INFORMATION FOR THE EFFICIENT PARTS CONTROL AFTER THE MODIFICATION, EFFECTIVE JULY 1979

The parts supply for the Nikon FM/FE has been/will be carried out under the classification of product codes 33FB, 35FB and P33FB. However, since the modification assures no interchangeability between new and old parts, with some exceptions, it increases the number of parts to be ordered and stocked. Additionally, the modification varies the extent of common usage of parts and thus some parts change the product code from 33FB/35FB (P33FB) to P33FB (33FB/35FB).

Under these circumstances, be sure to arrange the parts orders for 33FB, 35FB and P33FB with careful attention to the change of product code and parts number, and verify the inventory of yours for preventing an excessive order.

The change of commonly used parts falls into the following three cases;

i) A part commonly used for the old FM/FE will be used exclusively for the new FE, since since simply the FM has been modified.

P33FB → 35FB

ii) A part commonly used for the old FM/FE will be used exclusively for the new FM, since simply the FE has been modified.

P33FB → 33FB

iii) A part exclusively used for the old FE will be used commonly for the new FM/FE, since the FM has been modified.

35FB → P33FB

As mentioned above, an old part cannot be replaced with a modified one in principle. But there are some exceptins as follows;

30000 + UP NEW FM
35000 + UP NEW FE

33FB	#490-5	Multi-exposure arm A
	B26-6	Mirror holder
35FB	#240-5	Screen lock spring
	#490-1	Multi-exposure lever
	#651-1	Rewind shaft bearing
	B-5	Front plate
P33FB	#202-5	Bayonet
	#496-6	Sprocket stopper spring
	#848-1	Eyelet set screw
	A2-1	Eyelet
	A6-5	Charge lever
	A12-6	Sprocket stopper

These new parts can be used also in the old camera body.

The modification will cause a complex situation for the parts control of the FM/FE, due to the considerable amount of modified parts and the changes of commonly used parts. For preventing troubles of parts order at the initial stage, the following Parts Control Cross Reference List is prepared to show at sight how a part is used in the old and new FM/FE, including the parts which have not been modified.

Also note that there are some UNMODIFIED parts which have been simply changed their part numbers with the modification. Thus, take care to use the new number for every part when placing on order.

Therefore, it is indispensable for the parts control that the part numbers and product codes of spare parts in your stock should be changed as soon as possible, against the cross reference list.

How to read the Parts Control Cross Reference List

A) Unmodified parts

	Parts number	New FE	Old FE	New FM	Old FM
ex. 35FB	653	X	X		
33FB	39			X	X
P33FB	53	X	X	X	X

B) Parts exclusively used in the old body

ex. 35FB	K		X		
33FB	53				X
P33FB	25-1		X		X

C) Parts exclusively used in the new body

ex. 35FB	K-6	X			
33FB	470-6			X	
P33FB	25-2	X		X	

D) Change of commonly used parts: Case i)

ex. 35FB	470-5	X	X	X	

E) Change of commonly used parts: Case ii)

	Parts number	New FE	Old FE	New FM	Old FM
ex. 33FB	217-5		X	X	X

F) Change of commonly used parts: Case iii)

ex. P33FB	283-5	X	X	X	

G) Change Product code or Parts number

ex. 33FB	B16				
	B16-5			X	X

Ucamera

33FB

Parts number	New FE	Old FE	New FM	Old FM	Remarks
39			X	X	
40			X	X	
52			X	X	
53				X	
56			X	X	
57			X	X	
61			X	X	
67-1			X	X	
68(01)			X	X	
68(02)			X	X	
76			X	X	
78			X	X	
79-1			X	X	
80				X	
80-6			X		
81			X	X	
83				X	
87			X	X	
90				X	
151				X	
152			X	X	
155			X	X	
155A			X	X	
160			X	X	
161			X	X	
162				X	

Parts number	New FE	Old FE	New FM	Old FM	Remarks
163			X	X	
164				X	
175			X	X	
176				X	
177			X	X	
178			X	X	
201				X	
201-6			X		
210A-5			X		
217-5		X	X	X	Change Product cord from P33FB-217-1
221-1			X	X	
222-1				X	
222-6			X		
232			X	X	
233			X	X	
237			X	X	
250				X	
251				X	
252				X	
252-6			X		
253			X	X	
262-5			X		
264-5			X		
266-5			X		
267-5			X		
268-5			X		

Parts number	New FE	Old FE	New FM	Old FM	Remarks
282				X	
283-1				X	
284				X	
291-5		X	X	X	Change Product cord from P33FB·291
291A-5		X	X	X	Change Product cord from P33FB·291A
291B-5		X	X	X	Change Product cord from P33FB·291B
302			X	X	
303			X	X	
313				X	
314				X	
314-6			X		
320			X	X	
321A			X	X	
321B			X	X	
321C			X	X	
329			X	X	
331-5		X	X	X	Change Product cord from P33FB·331
334				X	
336				X	
339-5		X	X	X	
342-1				X	
343-1				X	
343-6			X		
348			X	X	
349			X	X	
355A				X	

Parts number	New FE	Old FE	New FM	Old FM	Remarks
357-5		X	X	X	Change Product cord from P33FB·357
361			X	X	
367				X	
368				X	
374				X	
374-6			X		
378				X	
404A			X	X	
406-1		X	X	X	Change Product cord from P33FB·406
468-1(01)				X	
468-1(02)				X	
468-6			X		
468-6 (Black-finished)					Order 35FB-468
470-6			X		
476				X	
478-1				X	
490				X	
490-5			X	X	
490A			X	X	
491(01)			X	X	
491(02)			X	X	
492				X	
492-6			X		
493B			X	X	
494			X	X	
494A				X	

Parts number	New FE	Old FE	New FM	Old FM	Remarks
503			X	X	
518A			X	X	
519			X	X	
527-1			X	X	
535C				X	
535D				X	
540B				X	
541-2			X	X	
541A			X	X	
542-2			X	X	
543-3			X	X	
571			X	X	
575-2(01)			X	X	
575-2(02)			X	X	
576			X	X	
577-2			X	X	
578-1			X	X	
579			X	X	
581			X	X	
588				X	
588-6			X		
589				X	
589-6			X		
590				X	
590-6			X		
594				X	

Parts number	New FE	Old FE	New FM	Old FM	Remarks
596			X	X	
600			X	X	
618-1			X	X	
623			X	X	
624A			X	X	
624B			X	X	
624C			X	X	
624D			X	X	
651			X	X	
652			X	X	
653 (03) (04)			X	X	
655			X	X	
659			X	X	
660			X	X	
661			X	X	
662			X	X	
663			X	X	
664(01)			X	X	
664(02)			X	X	
664A			X	X	
664B			X	X	
664C			X	X	
665			X	X	
706			X	X	
708			X	X	
808			X	X	

Parts number	New FE	Old FE	New FM	Old FM	Remarks
808A			X	X	
811-5		X	X	X	
816				X	
819-5		X	X	X	Change Product cord from P33FB·819
828			X	X	
834			X	X	
837				X	
839			X	X	
846			X	X	
854			X	X	
855				X	
856		X	X	X	Change Product cord from P33FB·856
858-5		X	X	X	Change Product cord from P33FB·858
861			X	X	
867			X	X	
869-2			X	X	
870			X	X	
873			X	X	
874			X	X	
877			X	X	
878A-5		X	X	X	Change Product cord from P33FB·878A
878B-5		X	X	X	Change Product cord from P33FB·878B
880			X	X	
884-5			X		
885				X	
886				X	

Parts number	New FE	Old FE	New FM	Old FM	Remarks
899			X	X	
904				X	
905				X	
G2K			X	X	
G2B			X	X	
A29			X	X	
A30			X	X	
B-2(01)				X	
B-2(02)				X	
B-6(01)			X		
B-6(02)			X		
B2				X	
B2-6			X		
B3-1(01)				X	
B3-1(02)				X	
B4(01)				X	
B4(02)				X	
B4-6(01)			X		
B4-6(02)			X		
B5-5		X	X	X	Change Product cord from P33FB·B5-1
B6-5		X	X	X	Change Product cord from P33FB·B6-1
B11				X	
B12				X	
B12-6			X		
B13-1				X	
B15-1				X	

Parts number	New FE	Old FE	New FM	Old FM	Remarks
B16					
B16-5			X	X	
B17-1					Change Part number to B17-5
B17-5			X	X	
B18-2				X	
B19			X	X	
B21				X	
B26				X	
B26-6			X	X	
B27-1				X	
B28-1				X	
B28-6			X		
B30-1(01)			X	X	
B30-1(02)			X	X	
B32				X	
B32-6			X		
B36-6			X		
B39-5			X		
B40-6			X		
C-1(01)				X	
C-1(02)				X	
C-6(01)			X		
C-6(02)			X		
C1-1			X	X	
C3-1				X	
F-2			X	X	

Parts number	New FE	Old FE	New FM	Old FM	Remarks
F2-1			X	X	
F7-1			X	X	
H1-1			X	X	
K				X	
K-6			X		
K4				X	
M			X	X	
N1			X	X	
N2			X	X	
N4			X	X	
N6-5			X		
P3-1(01)			X	X	
P3-1(02)			X	X	
P4				X	

Parts number	New FE	Old FE	New FM	Old FM	Remarks
14	X	X			
19	X	X			
20	X	X			
36A-1	X	X			
36B-1	X	X			
42	X	X			
52		X			
52-1	X				
56	X	X			
57	X	X			
61		X			
61-1	X				

Parts number	New FE	Old FE	New FM	Old FM	Remarks
67	X	X			
68(01)	X	X			
68(02)	X	X			
78	X	X			
79	X	X			
81	X	X			
84	X	X			
95	X	X			
100	X	X			Refer to Technical Info. FE-790008 #100 is a new shutter.
118A	X	X			
118B	X	X			
122	X	X			
126A		X			
126B		X			
127	X	X			
128A	X	X			
128B	X	X			
129	X	X			
130	X	X			
131	X	X			
132	X	X			
133	X	X			
134	X	X			
135		X			
135-6	X				
136		X			

Parts number	New FE	Old FE	New FM	Old FM	Remarks
137		X			
138	X	X			
139	X	X			
140	X	X			
142	X	X			
143	X	X			
144	X	X			
145	X	X			
146	X	X			
201		X			
214A-6	X				
222		X			
232	X	X			
233	X	X			
236	X	X			
240		X			
240-5	X	X			
250A		X			
250-1	X				
251(03)		X			
251(04)		X			
251-1	X				
252		X			
252-1	X				
253					Change Part number to 253-1
253-1	X	X			

Parts number	New FE	Old FE	New FM	Old FM	Remarks
260	X	X			
266		X			
267		X			
270					Change Product cord to P33FB·270-5
283-1					Change Product cord to P33FB·283-5
284-1		X			
313					Change Product cord to P33FB·313-5
314	X	X			
318					Change Product cord to P33FB·318-6
320		X			
321	X	X			
329		X			
338		X			
339-6	X				
343A	X	X			
343A-6	X	X			
348	X	X			
349		X			
361		X			
363		X			
370-5	X				
378					Change Product cord to P33FB·378-5
404A	X	X			
406-2	X	X			
468	X	X	X		Black finished for the new FM
469					Change Product cord to P33FB·469-6

Parts number	New FE	Old FE	New FM	Old FM	Remarks
470-5	X	X		X	Change Product cord from P33FB·470
476		X			
490		X			
490-1	X	X			
491	X	X			
493A	X	X			
493B	X	X			
493C	X	X			
503-1	X	X			
518A	X	X			
519	X	X			
527	X	X			
540B		X			
540C		X			
540D		X			
541A	X	X			
541D	X	X			
575(01)	X	X			
575(02)	X	X			
577	X	X			
631A	X	X			
639	X	X			
641	X	X			
642	X	X			
651		X			
651-1	X	X			

Parts number	New FE	Old FE	New FM	Old FM	Remarks
652-1	X	X			
653	X	X			
655	X	X			
659	X	X			
660	X	X			
662	X	X			
664-1	X	X			
665-1	X	X			
669	X	X			
670	X	X			
671	X	X			
672	X	X			
676	X	X			
686	X	X			
687	X	X			
688	X	X			
689	X	X			
691	X	X			
692	X	X			
693	X	X			
697	X	X			
698	X	X			
706	X	X			
708	X	X			
806-5	X	X		X	Change Product cord from P33FB·806
807-6	X				

Parts number	New FE	Old FE	New FM	Old FM	Remarks
818	X	X			
822	X	X			
826-1	X	X			
827					Change Product cord to 899
827-1	X	X			
828		X			
829	X	X			
834		X			
834-6	X				
836	X	X			
837		X			
839-1	X	X			
839A	X				
861	X	X			
862	X	X			
863					Change Product cord to P33FB·863-5
873	X	X			
877		X			
880	X	X			
884-5	X				
885-5	X				
886-5	X				
896	X	X			
898	X	X			
899	X	X			Change Product cord from 827
904		X			

Parts number	New FE	Old FE	New FM	Old FM	Remarks
905		X			
930		X			
930-6	X				
934	X	X			
935	X	X			
936	X	X			
937	X	X			
939		X			
943A	X	X			
943B	X	X			
943C	X	X			
943D	X	X			
944A	X	X			
944B	X	X			
945A	X	X			
945B	X	X			
945C	X	X			
946	X	X			
947-1		X			
948		X			
949-5	X				
951	X				
952-5	X				
RA	X	X			
RB	X	X			
RF	X	X			

Parts number	New FE	Old FE	New FM	Old FM	Remarks
G2K	X	X			
G9	X	X			
G10	X	X			
G2B(03)	X	X			
G2E(03)	X	X			
G2K(03)	X	X			
B-1(01)		X			
B-1(02)		X			
B-5(01)	X	X			
B-5(02)	X	X			
B2		X			
B2-6	X				
B4(01)		X			
B4(02)		X			
B4-6(01)	X				
B4-6(02)	X				
B6-6	X				
B7		X			
B7-6	X				
B9-1		X			
B9-6	X				
B11		X			
B12		X			
B12-6	X				
B13-1		X			
B15-6	X				

Parts number	New FE	Old FE	New FM	Old FM	Remarks
B16		X			
B17-1		X			
B19		X			
B19-6	X				
B22-1	X	X			
B25		X			
B25-6	X				
B26		X			
B26-6	X				
B27		X			
B30(01)		X			
B30(02)		X			
B30-6(01)	X				
B30-6(02)	X				
B32	X	X			
B34		X			
B35		X			
B35-6	X				
B36-6	X				
B37-1		X			
B38					Change Product cord to P33FB·B38-5
B39		X			
C(01)		X			
C(02)		X			
C-6(01)	X				
C-6(02)	X				

Parts number	New FE	Old FE	New FM	Old FM	Remarks
C1	X	X			
C5	X	X			
C6	X	X			
F(01)	X	X			
F(02)	X	X			
F1	X	X			
F2	X	X			
F3	X	X			
F4A(01)	X	X			
F4A(02)	X	X			
H1-1	X	X			
J	X	X			
K		X			
K-6	X				
K3		X			
K4		X			
M	X	X			
N1	X	X			
N4	X	X			
P3-1(01)	X	X			
P3-1(02)	X	X			
P4		X			
R	X	X			
R1	X	X			
R2	X	X			

Parts number	New FE	Old FE	New FM	Old FM	Remarks
4A	X	X	X	X	
10	X	X	X	X	
13	X	X	X	X	
15	X	X	X	X	
25-1		X		X	
25-2	X		X		
26-1		X		X	
26-2	X		X		
28-1		X		X	
28-2	X		X		
29		X		X	
29-1	X		X		
30-1(03)		X		X	
30-1(04)		X		X	
31-1(03)		X		X	
31-1(04)		X		X	
31-2	X		X		
45-1	X	X	X	X	
50	X	X	X	X	
51	X	X	X	X	
54(01)	X	X	X	X	
54(02)	X	X	X	X	
55	X	X	X	X	
58-1	X	X	X	X	
58A-1	X	X	X	X	
58B-1	X	X	X	X	

Parts number	New FE	Old FE	New FM	Old FM	Remarks
59	X	X	X	X	
60	X	X	X	X	
63	X	X	X	X	
64	X	X	X	X	
65(01)	X	X	X	X	
65(02)	X	X	X	X	
69	X	X	X	X	
70-1	X	X	X	X	
71-1	X	X	X	X	
73	X	X	X	X	
74	X	X	X	X	
80		X		X	
82-1	X	X	X	X	
85-1	X	X	X	X	
97	X		X		
98-1	X		X		
126-5	X		X		
202		X		X	
202-5	X	X	X	X	
208		X		X	
208-6	X		X		
210		X		X	
217-1					Change Product cord to 33FB·217-5
223		X		X	
261	X	X	X	X	
270-5	X	X	X		Change Product cord from 35FB·270

Parts number	New FE	Old FE	New FM	Old FM	Remarks
281-1	X	X	X	X	
283-5	X	X	X		Change Product cord from 35FB·283-1
284-6	X		X		
288-1	X	X	X	X	
289-1	X	X	X	X	
291					Change Product cord to 33FB·291-5
291A					Change Product cord to 33FB·291A-5
291B					Change Product cord to 33FB·291B-5
313-5	X	X	X		Change Product cord from 33FB·313
318-6	X	X	X		Change Product cord from 35FB·318
320A	X	X	X	X	
326A	X	X	X	X	
328	X	X	X	X	
330	X	X	X	X	
331					Change Product cord to 33FB·331-5
340	X	X	X	X	
341	X	X	X	X	
344					Change Part number to 344-5
344-5	X	X	X	X	
352-2	X	X	X	X	
355-2	X	X	X	X	
357					Change Product cord to 33FB·357-5
363-6	X		X		
372	X	X	X	X	
375					Change Part number to 375-5
375-5	X	X	X	X	

Parts number	New FE	Old FE	New FM	Old FM	Remarks
378-5	X	X	X		Change Product cord from 35FB·378
379-1		X		X	
379-6	X		X		
383		X		X	
383-1	X		X		
394	X	X	X	X	
395	X	X	X	X	
402	X	X	X	X	
403-1(01)	X	X	X	X	
403-1(02)	X	X	X	X	
405-2	X	X	X	X	
406					Change Product cord to 33FB·406-1
408	X	X	X	X	
408A	X	X	X	X	
412		X		X	
412-6	X		X		
413		X		X	
413-6	X		X		
414B-5	X		X		
415-6	X		X		
429	X	X	X	X	
431		X		X	
431-6	X		X		
432		X		X	
432-6	X		X		
433		X		X	

Parts number	New FE	Old FE	New FM	Old FM	Remarks
434		X		X	
434-6	X		X		
435	X	X	X	X	
435A	X	X	X	X	
436-1	X	X	X	X	
437	X	X	X	X	
438		X		X	
438-6	X		X		
439	X	X	X	X	
441		X		X	
441-6	X		X		
450	X	X	X	X	
460	X	X	X	X	
462	X	X	X	X	
464	X	X	X	X	
465	X	X	X	X	
467-1	X	X	X	X	
469-6	X	X	X		Change Product cord from 35FB·469
470					Change Product cord to 35FB·470-5
473		X		X	
483		X		X	
483-6	X		X		
487		X		X	
488		X		X	
489		X		X	
489A	X		X		

Parts number	New FE	Old FE	New FM	Old FM	Remarks
489-6	X		X		
495	X	X	X	X	
496		X		X	
496-6	X	X	X	X	
498	X	X	X	X	
499-1		X		X	
502-1	X	X	X	X	
505		X		X	
505-6	X		X		
506		X		X	
507		X		X	
508		X		X	
508-6	X		X		
509-6	X		X		
510-6	X		X		
511-6	X		X		
512		X		X	
514		X		X	
521		X		X	
521-6	X		X		
522-6	X		X		
522A-5	X		X		
523		X		X	
527A	X	X	X	X	
527B-1	X	X	X	X	
531-1		X		X	

Parts number	New FE	Old FE	New FM	Old FM	Remarks
531-6	X		X		
532-1		X		X	
532-6	X		X		
534		X		X	
533	X	X	X	X	
535A	X	X	X	X	
535B-1	X	X	X	X	
536	X	X	X	X	
537		X		X	
537-6	X		X		
537A		X		X	
537B		X		X	
538	X	X	X	X	
538A	X	X	X	X	
539	X	X	X	X	
540A		X		X	
656	X	X	X	X	
666-1	X	X	X	X	
709	X	X	X	X	
714	X	X	X	X	
722	X	X	X	X	
725	X	X	X	X	
726	X	X	X	X	
727	X	X	X	X	
728	X	X	X	X	
730	X	X	X	X	

Parts number	New FE	Old FE	New FM	Old FM	Remarks
731	X	X	X	X	
732	X	X	X	X	
801	X	X	X	X	
802	X	X	X	X	
803(01)	X	X	X	X	
803(02)	X	X	X	X	
804A(01)	X	X	X	X	
804A(02)	X	X	X	X	
804B	X	X	X	X	
805	X	X	X	X	
806					Change Product cord to 35FB·806-5
810	X	X	X	X	
811		X		X	
812					Change Part number to 812-5
812-5	X	X	X	X	
812A-5	X		X		
813(01)	X	X	X	X	
813(02)	X	X	X	X	
815					Change Part number to 815-5
815	X	X	X	X	
815A-5	X		X		
817	X	X	X	X	
819					Change Product cord to 33FB·819-5
820	X	X	X	X	
821	X	X	X	X	
823A	X	X	X	X	

Parts number	New FE	Old FE	New FM	Old FM	Remarks
823B	X	X	X	X	
823C	X	X	X	X	
823D	X	X	X	X	
824	X	X	X	X	
825A	X	X	X	X	
825					Change Part number to 825-5
825-5	X	X	X	X	
830	X	X	X	X	
831		X		X	
831-6	X		X		
832	X	X	X	X	
833-1	X	X	X	X	
835	X	X	X	X	
840	X	X	X	X	
841	X	X	X	X	
842A	X	X	X	X	
842B	X	X	X	X	
842C	X	X	X	X	
842D	X	X	X	X	
842E	X	X	X	X	
842F	X	X	X	X	
842G	X	X	X	X	
842H	X	X	X	X	
842i	X	X	X	X	
842J	X	X	X	X	
842K					Change Part number to 842K-5

Parts number	New FE	Old FE	New FM	Old FM	Remarks
842K-5	X	X	X	X	
842M	X	X	X	X	
842N	X	X	X	X	
842P	X	X	X	X	
842Q	X	X	X	X	
842R	X	X	X	X	
842S	X	X	X	X	
842T	X	X	X	X	
842U	X	X	X	X	
842V	X	X	X	X	
843					Change Part number to 843-5
843-5	X	X	X	X	
844-5	X		X		
845					Change Part number to 845-5
845-5	X	X	X	X	
845A-5	X		X		
848		X		X	
848-1	X	X	X	X	
850-1	X	X	X	X	
855A	X	X	X	X	
856					Change Product cord to 33FB·856
857					Change Part number to 857-5
857-5	X	X	X	X	
858					Change Product cord to 33FB·858-5
863-5	X	X	X		Change Product cord from 35FB·863
871	X	X	X	X	

Parts number	New FE	Old FE	New FM	Old FM	Remarks
875	X	X	X	X	
878A					Change Product cord to 33FB·878A-5
878B					Change Product cord to 33FB·878B-5
879	X	X	X	X	
882	X	X	X	X	
883	X	X	X	X	
887	X	X	X	X	
888	X	X	X	X	
889	X	X	X	X	
890-1	X	X	X	X	
893		X		X	
897A	X	X	X	X	
897B	X	X	X	X	
897C	X	X	X	X	
897D	X	X	X	X	
897E	X	X	X	X	
897F	X	X	X	X	
910	X	X	X	X	
911	X	X	X	X	
912	X	X	X	X	
913	X	X	X	X	
914	X	X	X	X	
915	X		X		
923	X	X	X	X	
950	X		X		
G1	X	X	X	X	

Parts number	New FE	Old FE	New FM	Old FM	Remarks
G3	X	X	X	X	
G6	X	X	X	X	
A2		X		X	
A2-1	X	X	X	X	
A4		X		X	
A4A(03)		X		X	
A4A(04)		X		X	
A4-1	X		X		
A5-2	X	X	X	X	
A6(03)		X		X	
A6(04)		X		X	
A6-5	X	X	X	X	
A7-1	X	X	X	X	
A8	X	X	X	X	
A9	X	X	X	X	
A10A-1		X		X	
A10B-2	X	X	X	X	
A11		X		X	
A11-6	X		X		
A12		X		X	
A12-6	X	X	X	X	
A13-6	X		X		
A14	X	X	X	X	
A17-1	X	X	X	X	
A18		X		X	
B1(01)	X	X	X	X	

Parts number	New FE	Old FE	New FM	Old FM	Remarks
B1(02)	X	X	X	X	
B5-1					Change Product cord to 33FB·B5-5
B6-1					Change Product cord to 33FB·B6-5
B10	X	X	X	X	
B11-6	X		X		
B13-6	X		X		
B14	X	X	X	X	
B20		X		X	
B20-1	X		X		
B27-6	X		X		
B33-2	X	X	X	X	
B38-5	X	X	X		Change Product cord from 35FB·B38
C4	X	X	X	X	
C7	X	X	X	X	
D-1(01)	X	X	X	X	
D-1(02)	X	X	X	X	
E1	X	X	X	X	
E2	X	X	X	X	
K5		X		X	
K6		X		X	
P5	X	X	X	X	

MARKS IN THE PARTS LIST 記号説明

(1) Standard mechanical elements 標準機械要素

Mark 記号	Shape 形状	Name 名称	Mark 記号	Shape 形状	Name 名称
JCIS ⊕ PM		JCIS Pan Head Machine Screw JCIS十字穴付きなべ小ねじ	HS		Hexagon Socket Head Set Screw 六角穴付き止めねじ
JCIS ⊕ CM		JCIS Countersunk Head Machine Screw JCIS十字穴付きさら小ねじ	HSB		Hexagon Socket Head Bolt 六角穴付きボルト
JCIS ⊕ OCM		JCIS Oval Countersunk Head Machine Screw JCIS十字穴付き丸さら小ねじ	(45°)P		Oval Countersunk Head Special Machine Screw すりわり付き特殊丸さら小ねじ
⊕ PM		Pan Head Machine Screw 十字穴付きなべ小ねじ	(45°)Q		Countersunk Head Special Machine Screw すりわり付き特殊さら小ねじ
⊕ CM		Countersunk Head Machine Screw 十字穴付きさら小ねじ	⊕ PTB		Pan Head Tapping Screw Type B 十字穴付きなべタッピンねじB
⊕ OCM		Oval Countersunk Head Machine Screw 十字穴付き丸さら小ねじ	⊕ CTB		Countersunk Head Tapping Screw Type B 十字穴付きさらタッピンねじB
⊕ RM		Round Head Machine Screw 十字穴付き丸小ねじ	⊕OCTB		Oval Countersunk Head Tapping Screw Type B 十字穴付き丸さらタッピンねじB
⊕ TM		Truss Head Machine Screw 十字穴付きトラス小ねじ	⊕ PT		Pan Head Tapping Screw 十字穴付きなべタッピンねじ
SR		Set Screw Round Point すりわり付き止めねじ丸さき	⊕ CT		Countersunk Head Tapping Screw 十字穴付きさらタッピンねじ
SC		Set Screw Cone Point すりわり付き止めねじとがりさき	⊕ OCT		Oval Countersunk Head Tapping Screw 十字穴付き丸さらタッピンねじ
SH		Set Screw Half Point すりわり付き止めねじくぼみさき	N		Hexagon Nut 六角ナット
TP		Taper Pin テーパピン	SPP		Spring Pin スプリングピン
STP		Straight Pin 平行ピン	E		E-ring E型止め輪

Expression 表 示 法

☆ **Standard screw 標準ねじ**

Mark, Diameter × Pitch × Length, Type or Mark, Diameter × Length, Type
記号 ねじの呼び径 ピッチ 長さ 種別 又は 記号 ねじの呼び径 長さ 種別

Ex. ⊕ RM 3×0.5×4 JCIS ⊕ PM 2×2.5 Type (3)

☆ **Pin ピ ン**

Mark, Diameter × Length
記号 呼び径 長さ

Ex. TP 2×12

☆ **Nut ナ ッ ト**

Diameter of internal thread, Mark-Type
ねじの呼び径 記号 種別

Ex. 8 N-Type (3)

☆ **E-ring E型止め輪**

Mark-Diameter
記号 呼び径

Ex. E-8

(2) The term of sale column 販売区分欄

Mark 記号	Explanation 説明	
○	Can be supplied individually	単独部品として販売するもの
△	Not supplied individually but only as subassembly	部組品でなければ販売しないもの
○△	Supplied either as part or subassembly	単独部品でも部組品でも販売するもの
×	Not considered as repair part	修理部品とは考えないもの
※	Should be sent to the factory if the repair is needed	単体では交換できないので、組む場合に工場での加工が必要なもの
◘	Delivered as a product from the sales department (i.e., not supplied as repair part)	商品として販売店で販売しているもの（修理部品扱いはしない）

(3) The remarks column 備 考 欄

32FB1#664	Part number used in common	共通部品番号
(Blue×125mn)	Lead wire (color×length)	コードの色と長さ
53F1001	Technical data sheet number	製品技術資料番号
(2.1×3.8×0.007)	Washer (internal diameter ×external diameter×thickness)	ワッシャーの（内径×外径×厚さ）
(Black)	Black-finished parts	黒部品
(d=0.2)	Diameter of wire.	線径=0.2
(t=1)	Thickness	厚さ=1
Rev.	Revision	訂正
Add.	Addition	追加
Dis.	Discontinuation	廃止

部品表 Parts List

35FB-R-3012-A

部品番号 Part No.	名称 Name	1台個数 Pcs. per Unit	部組品No. Sub-assembly No.	参照図番 Reference Fig. No.	販売区分 Term of Sale	備考 Remarks
1	ボディダイカスト Body die-casting	1			×	
1-5	ボディダイカスト Body die-casting	1			×	
2 (01) (02)	前カバー（銘板） Front cover (Name plate)	1	B30		Δ	
2-6 (01) (02)	前カバー（銘板） Front cover (Name plate)	1	B30-6		Δ	
3-1 (01) (02)	上カバー Top cover	1	C		Δ	
3-6 (01) (02)	上カバー Top cover	1	C-6		Δ	
4	底蓋 Bottom plate	1	D-1		Δ	
6	前板 Front plate	1	B-1		Δ	
6-6	前板 Front plate	1	B-5		Δ	
7 (01) (02)	接眼窓受 Eyepiece mount	1	C		Δ	
14	ターミナルアース板 Terminal earth plate	1		6 6-1	○	
17	セルフレバー軸 Self-timer lever axle	1	B2		Δ	

部品表 Parts List

35FB-R-3012-A

部品番号 Part No.	名称 Name	1台個数 Pcs. per Unit	部組品No. Sub-assembly No.	参照図番 Reference Fig. No.	販売区分 Term of Sale	備考 Remarks
17-6	セルフレバー軸 Self-timer lever axle	1	B-5 B2-6		△	
18	セルフ連動ギアA Self-timer gear A	1	B-1 B2		△	
19	セルフ連動ギアB Self-timer gear B	1	B-1 B-5	10 10-1	○△	
20	セルフ連動軸 Self-timer coupler	1	B-1 B-5	10 10-1	○△	
21	チャージレバー Charge lever	1	A-6		△	
36A-1	Mスイッチバネ A Memory switch spring A	1	B-1 B-5	10 10-1	○△	
36B-1	Mスイッチバネ B Memory switch spring B	1	B-1 B-5	10 10-1	○△	
41	Mスイッチ偏心ピン Mirror switch eccentric pin	1	B2 B-5		△	
42	セルフギア制限 Self-timer gear stopper	1	B-1 B-5	10 10-1	○△	
52	コード溝カバー Cord groove cover	1		13	○	
52-1	コード溝カバー Cord groove cover	1		13-1	○	
56	ボディ擬革A Vinyl leatherette A	1		16-1	○	
57	ボディ擬革B Vinyl leatherette B	1		16-1	○	
61	ミラーアップ受けモールド Mirror-up buffer	1	B-1	9	○△	

部品表 Parts List

35FB-R-3012-A

部品番号 Part No.	名称 Name	1台個数 Pcs. per Unit	部組品No. Sub-assembly No.	参照図番 Reference Fig. No.	販売区分 Term of Sale	備考 Remarks
61-1	ミラーアップ受けモールド Mirror groove cover	1	B-5	9-1	○△	
66	シュー座モールド Hot-shoe mould	1	C C1		△	
67	Hシュー Hot shoe contact	1	C C1	1 1-1	○△	
68 (01) (02)	シューバネ Shoe contact	1	C	1 1-1	○△	
76-1	シンクロ接点ナット Nut	1	C		△	
77	埋金接点 Signal contact	1	C C1		△	
78	ペンタ革 Penta cover leatherette	1	C	1 1-1	○△	
79-1	緩衝板 Shock absorb plate	1		14 14-1	○	
81	前板貼板 Front plate hole-cover	1		9 9-1	○	
84	アースラグ板 Earth lug plate	1	C	1 1-1	○△	
94	レディライト Ready-light	1	C C6		△	
95	LED遮光板 LED light baffle	1	C	1 1-1	○△	
100	シャッター Shutter	1		13 13-1	○	再成可能部品
101-2	ICプリント板 IC printed circuit	1	M		△	

部品表 Parts List

35FB-R-3012-A

部品番号 Part No.	名称 Name	1台個数 Pcs. per Unit	部組品No. Sub-assembly No.	参照図番 Reference Fig. No.	販売区分 Term of Sale	備考 Remarks
102	IC, A IC, A	1	M		Δ	
103-1	SBCプリント板 BC printed circuit	1	M		Δ	
106	IC, B IC, B	1	M		Δ	
107	抵抗ブロックA Resistor block A	1	M		Δ	
108	抵抗ブロックB Resistor block B	1	M		Δ	
109	レディライトプリント板 Printed circuit, ready-light	1	C C6		Δ	
111	スイッチングトランジスター Switch transistor	1	J		Δ	
112	電解コンデンサー（6 V, 4.7 μF） Capacitor	1	J		Δ	
113	メモリーコンデンサー（20 V, 6.8 μF） Memory capacitor	1	M		Δ	
114	タイマーコンデンサー（10 V, 1 μF） Self-timer capacitor	1	M		Δ	
115	発振防止コンデンサー（35 V, 0.1 μF） Anti-oscillation capacitor	1	M		Δ	
116	点滅コンデンサー（10V, 1 μF） Capacitor	1	M		Δ	
117	点滅抵抗（330 KΩ） Resistor	1	M		Δ	
118A	トリガ抵抗A（330 Ω） Trigger resistor A	1	M		○Δ	

部品表 Parts List

35FB-R-3012-A

部品番号 Part No.	名称 Name	1台個数 Pcs. per Unit	部組品No. Sub-assembly No.	参照図番 Reference Fig. No.	販売区分 Term of Sale	備考 Remarks
118B	トリガ抵抗B（100 Ω） Trigger resistor B	1	M		○△	
120	ラッチ防止トリガ抵抗C（10 KΩ） Latch-prevention resistor C	1	M		△	
121	チェッカー抵抗A（0.12 KΩ） Checker resistor A	1	J		△	
122	チェッカー抵抗B（1 KΩ） Checker resistor B	1	J		○△	
123	チェッカー抵抗C（0.22 KΩ） Checker resistor C	1	J		△	
124	チェッカーLEDチェッカー抵抗 Checker LED	1	J		△	
126A	レバースイッチコード Lead wire, lever switch	1		3	○	
126B	レバースイッチコード Lead wire, lever switch	1		3	○	
127	電源コード Lead wire, power source	1	B-1 B9-1 B-5 B9-6	14 14-1	○	
128A	シャッタースイッチコード Lead wire, shutter switch	1	B-1 B9-1 B-5 B9-6	10 10-1	○△	(Orange x 155mm)
128B	シャッタースイッチコード Lead wire, shutter switch	1	B-1 B9-1 B-5 B9-6	10 10-1	○△	(Pink x 155mm)
129	トリガースイッチコード Lead wire, trigger switch	1		13 13-1	○	(Blue, Yellow x 70mm)
130	FRE コード Lead wire, FRE	1	J	6 6-1	○△	(Orange, Yellow, Green, Black x 55mm)
131	管制部コードA Lead wire A, Shutter speed control	1	R	5 5-1	○△	(Brown, Yellow, Purple, Blue x 40mm)

部品表 Parts List

35FB-R-3012-A

部品番号 Part No.	名称 Name	1台個数 Pcs. per Unit	部組品No. Sub-assembly No.	参照図番 Reference Fig. No.	販売区分 Term of Sale	備考 Remarks
132	管制部コードA Lead wire A, Shutter speed control	1	R	5 5-1	○△	(White x 25mm)
133	プラスコードA Lead wire A	1	J	6 6-1	○△	(Red x 70mm)
134	プラスコードB Lead wire B	1		14 14-1	○	(Red x 50mm)
135	マグネットプラスコード Lead wire, magnet ⊕	1		3	○	(Orange x 50mm)
135-6	マグネットプラスコード Lead wire, magnet ⊕	1	K-6	2-1	○△	(Orange x 75mm)
136	MDスイッチコード Lead wire, MD switch	1	K	2, 14	○△	(Blue x 185mm)
137	後幕シグナルコードB Lead wire B, second curtain signal	1	K	13 2 14	○△	(Purple x 210mm)
138	後幕シグナルコードA Lead wire A, second curtain	1			○	(Green x 40mm)
139	メモリロックコード Lead wire, memory lock	1	B-1,B-5 B9-1 B9-6		○△	(Black x 40mm)
140	ミラースイッチコード Lead wire, mirror switch	1	B-1,B-5 B9 B9-6		○△	(Gray x 125mm)
142	シンクロコードA Lead wire A, synch.	1		9,9-1 13,13-1	○	(Blue x 45mm)
143	シンクロコードB Lead wire B, synch.	1		6, 6-1 9, 9-1	○	(Blue x 115mm)
144	チェッカーコード Lead wire, checker	1	J	6 6-1	○△	(Purple x 40mm)
145	ジャンピングワイヤA Lead wire A	1	M	9-1	○△	(Purple x 68mm)

部品表 Parts List

35FB-R-3012-A

部品番号 Part No.	名称 Name	1台個数 Pcs. per Unit	部組品No. Sub-assembly No.	参照図番 Reference Fig. No.	販売区分 Term of Sale	備考 Remarks
146	ジャンピングワイヤB Lead wire B	1	M	9-1	○△	(Yellow x 63mm)
201	マウント台 Bayonet mount	1	B-1	8	○△	
206	糸掛けピン Thread supporting pin	1	B25		△	
206-6	糸掛けピン Thread supporting pin	1	B25-6		△	
207 (01) (02)	絞り連動環 Aperture coupling ring	1	B4		△	
207-6 (01) (02)	絞り連動環 Aperture coupling ring	1	B4-6		△	
212-6	着脱ピン Lens release pin	1	B-5 B4-6		△	
214-6	着脱ピン受け Lens release pin holder	1	B-5 B6-6		△	
214A-6	着脱ピン押えばね（d－0.3） Lens release spring	1	B-5 B6-6	10-1	○△	
215-6	着脱釦軸 Lens release button shaft	1	B-5 B6-6		△	
217-6	着脱釦 Lens release button	1	B-5 B6-6		△	
222	連動環回転制限 Coupling ring stopper	1	B-1	8	○△	
224	ブラシ連動ギヤ Brush coupling gear	1	B-1 B-5 B25 B25-5		△	
225	ブラシ連動プーリー Brush coupling pulley	1	B-1 B25		△	

部品番号 Part No.	名称 Name	1台個数 Pcs. per Unit	部組品No. Sub-assembly No.	参照図番 Reference Fig. No.	販売区分 Term of Sale	備考 Remarks
225-6	ブラシ連動プーリー Brush coupling pulley	1	B-5 B25-6		Δ	
226	ブラシ連動ギヤ軸 Brush-gear axle	1	B-1 B-5 B25 B25-6		Δ	
229	プーリー制限B Pulley stopper B	1	B-1 B-5 B25 B25-6		Δ	
231-1	ペンタ押え板 Prism-retaining plate	1	M		Δ	
232	プリズム押えシート Prism retainer	1		9 9-1	○	
233	プリズム押えばね Prism retainer spring	2		9 9-1	○	
235	ミラー保持基板 Mirror retaining base plate	1	N1		Δ	
236	ミラー調整板 Mirror adjusting plate	1	N1		Δ	
237-2	F目盛マスクA F-scale mask A	1	B-1 B-5 B30 B30-6		Δ	
238	F目盛マスクB F-scale mask B	1	N1		Δ	
239	ミラー調整板カシメピン Rivet, mirror adjusting plate	1	N1		Δ	
240	スクリーンロックばね Screen lock rivet	1	B-1	9	○Δ	
240-5	スクリーンロックばね Screen lock rivet	1	B-5	9-1	○Δ	
243	スクリーンばね鋲 Screen lock rivet	4	B-1 B-5 B22-1		Δ	

部品表 Parts List

35FB-R-3012-A

部品番号 Part No.	名称 Name	1台個数 Pcs. per Unit	部組品No. Sub-assembly No.	参照図番 Reference Fig. No.	販売区分 Term of Sale	備考 Remarks
244-2	スクリーンばね Screen frame spring	2	B-1 B-5 B22-1		△	
245	スクリーン枠 Screen frame	1	B-1 B-5 B22-1		△	
246-5	巻上げ側スクリーン軸受 Screen frame shaft	1	B-5 B15-7		△	
247-5	巻上げ側チリトリ回転軸 Mirror holder shaft	1	B-5 B15-7		△	
248	スクリーン枠軸 Screen frame shaft	2	B-1 B34 B35		△	
248-6	巻戻側スクリーン軸受 Screen frame shaft	1	B-5 B35-6		△	
250	プリズムボックス Prism box	1	B39		△	
250-1	プリズムボックス Prism box	1	B-5	9-1	○△	
250A	プリズムボックス内ルミラー Prism box light baffle	1		9	○	
251 (03)	視野枠 Finder field frame	1		9	○	
251 (04)	視野枠 Finder field frame	1		9	○	
251-1	視野枠 Finder field frame	1		9-1	○	
252-1	間隔枠 Spacer	1		9-1	○	
252A	メーター部視野枠 Meter view frame	1	B39		△	
252	間隔枠 Spacer	1		9	○	

部品表 Parts List

35FB-R-3012-A

部品番号 Part No.	名称 Name	1台個数 Pcs. per Unit	部組品No. Sub-assembly No.	参照図番 Reference Fig. No.	販売区分 Term of Sale	備考 Remarks
253-1	プリズム絞り板 Prism mask	1		9 9-1	○	
254	接眼横遮光板 Light baffle	2	N4		△	
258	フォトダイオード Photo diode (SPD)	2	M		△	
259	接眼モールド Eyepiece mold	1	N4		△	
260	SBCプリント板押え SBC printed board retainer	1		9 9-1	○	
262	コロ Roller	1	B-1 B7		△	
262-6	コロ Roller	1	B-5 B7-6		△	
263-6	コロ軸 Roller axle	1	B-1 B7		△	
252	間隔枠 Spacer	1		9		
264	糸はずれ防止板B Thread retaining plate	1	B-1 B7		△	
265	コロレバー Roller lever	1	B-1 B7		△	
265-6	連動コロばね Spring plate	1	B-5 B7-6		△	
266	コロレバー軸 Roller lever axle	1	B-1	10	○△	

部品番号 Part No.	名称 Name	1台個数 Pcs. per Unit	部組品No. Sub-assembly No.	参照図番 Reference Fig. No.	販売区分 Term of Sale	備考 Remarks
267	コロレバーばね（d＝0.35） Roller lever spring	1	B-1	10	○△	
268	ブラシ連動ギヤ基板 Brush-coupling gear base plate	1	B-1 B-5 B25 B25-6		△	
269	糸 Thread	1	B-1 B25		△	
269-6	糸 Thread	1	B-5 B25-6		△	
284-1	Gリング G-ring	1	B37-1 B-1	12	○△	
291-6	係止レバー軸 Latch lever axle	1	B-5 B15-7		△	
300-5	側面基板 Mirror box side plate	1	B-5 B15-7		△	
302	巻上側チリトリ回転軸 Mirror holder shaft	2	B-1 B34 B35		△	
302-6	巻上側チリトリ回転軸 Mirror holder shaft	1	B-5 B35-6		△	
304	ミラーチリトリ駆動板 Mirror holder actuating plate	1	B-1 B-5 B26 B26-6		△	
305	エアダンパー駆動板 Air damper actuating plate	1	B-1 B-5 B26 B26-5		△	
308	チリトリピンB Mirror holder pin B	1	B-1 B-5 B26 B26-6		△	
309	絞り込みレバー Diaphragm set lever	1	B-1 B-5 B32		△	
311A	インサート板 Insert plate	1	B-1 B-5 B32 B32-5		△	

部品表 Parts List

35FB-R-3012-A

部品番号 Part No.	名称 Name	1台個数 Pcs. per Unit	部組品No. Sub-assembly No.	参照図番 Reference Fig. No.	販売区分 Term of Sale	備考 Remarks
314	絞りレバービス Diaphragm actuating lever screw	1	B-1 B-5	11 11-1	○△	
317-6	45°ストッパー 45° stopper	1	B-5 B15-7		△	
320	シャッターレリーズカラー Shutter release	1	B-1	11	○△	
320-6	シャッターレリーズ軸 Shutter release axle	1	B-5 B15-7		△	
321	シャッターレリーズレバー Shutter release lever	1	B-1 B-5 B15-7	11 11-1	○△	
322	ミラーアップレバー Mirror-up lever	1	B-1,B-5 B12 B12-6		△	
323	ミラーダウンレバー Mirror-down lever	1	B-1 B13		△	
326-6	ミラーレバー軸 Mirror lever axle	1	B-5 B15-7		△	
327	ミラースイッチ絶縁カラー Mirror switch insulator	1	B-1,B-5 B12 B12-6		△	
329	ミラーアップ押えレバー Mirror-up stop lever	1	B-1	11	○△	
329-6	ミラーアップ押えレバー Mirror-up stop lever	1	B-5 B15-7	11-1	△	
331-6	ミラーアップ押えレバー軸 Mirror-up stop lever axle	1	B-5 B15-7		△	
332-5	ミラー軸止め板 Mirror shaft stopper	1	B-1,B-5 B34 B35 B35-6		△	
337	45°ストッパー座 45° stopper base	1	B-1 B16		△	

部品番号 Part No.	名称 Name	1台個数 Pcs. per Unit	部組品No. Sub-assembly No.	参照図番 Reference Fig. No.	販売区分 Term of Sale	備考 Remarks
338	45°ストッパー座止めビス 45° stopper base screw	1	B-1	9	○△	
339-6	45°ストッパーばね (d=0.32) 45° stopper spring	1	B-5 B15-7	11-1	○△	
342	保持レバー制限 Lever stopper	1	B-1 B37-1		△	
343A	ダウンばね (d=0.8) Mirror-down spring	1	B-1 B37-1	12	○△	
343A-6	ダウンばね (d=0.8) Mirror-down spring	1	B-5 B36-6	12-1	○△	
348	シャッターレリーズばね (d=0.23) Shutter release spring	1	B-1 B-5 B15-7	11 11-1	○△	
349	ミラーアップばね (d=0.26) Mirror-up spring	1	B-1	11	○△	
349-6	ミラーアップ押えレバーばね (d=0.26) Mirror-up lever spring	1	B-5 B15-7		△	
355A	保持レバーばね軸 Lever spring shaft	1	B-1 B37-1		△	
357-6	シグナルレバー軸 Signal lever axle	1	B-5 B15-7		△	
358	ダウンレバー連結軸 Down lever connecting shaft	1	B-1 B13		△	
361	ミラーアップ押えレバーばね掛け Spring stud	1	B-1	11	○△	
362	ダウンレバー調整レバー Down lever adjusting lever	1	B-1 B37-1		△	
353-1	MD巻上げ中間レバー軸 MD take-up signal middle lever axle	1	B-1 B37-1		△	

部品表 Parts List

35FB-R-3012-A

部品番号 Part No.	名称 Name	1台個数 Pcs. per Unit	部組品No. Sub-assembly No.	参照図番 Reference Fig. No.	販売区分 Term of Sale	備考 Remarks
363	ダウンレバー緩衝ゴム Shock absorb rubber	1	B-1 B37-1	12	○△	
370-6	遮光紙 Light baffle	1	B-5 B15-7	11-1	○△	
377	ミラーレバー軸取付板 Mirror lever shaft base	1	B-1 B17		△	
404A	枚数計押え板 Counter retaining ring	1	K K-6	2 2-1	○△	
406-2	レバー戻しばね (d＝0.35) Film-advance lever retaining spring	1		1 1-1	○	
451	上地板 Upper base plate	1	K		△	
468	レリーズ釦飾り環 Release button ring	1	C	1 1-1	○△	
401A-1	巻上げレバーブッシュ Film-advance lever bush	1	P3-1		△	
469	かぶせレリーズ環 Release ring	1	C	1	○△	
470-5	レリーズ内筒 Release inner tube	1	C	1 1-1	○△	
475	スイッチ絶縁パイプ Switch insulating tube	1	P4		△	
476	スイッチ制限ばね (d＝0.23) Switch stopper spring	1		2	○	
478-2	絶縁モールド Mold insulator	1	K K4		△	
484	スイッチレバー Lever switch	1	K K4		△	

部品番号 Part No.	名称 Name	1台個数 Pcs. per Unit	部組品No. Sub-assembly No.	参照図番 Reference Fig. No.	販売区分 Term of Sale	備考 Remarks
486	スイッチ絶縁ピン Switch insulating pin	1	K K4		△	
490	多重撮り連結レバー Multi-exposure lever	1	K	2	○△	
490-1	多重撮り連結レバー Multi-exposure lever	1	K-6	2-1	○△	
491	多重撮りツマミ Multi-exposure knob	1		1 1-1	○	
493A	多重撮りシートA t = 0.1 Multi-exposure sheet A t=0.1	1		1 1-1	○	
493B	多重撮りシートB t = 0.188 Multi-exposure sheet B t=0.188	1		1 1-1	○	
493C	多重撮りシートC t = 0.25 Multi-exposure sheet C t=0.25	1		1 1-1	○	
503-1	枚数計窓 Frame-counter window	1	C	1 1-1	○△	
518	レリーズレバー Release lever	1	B-1 B19		△	
518-6	レリーズレバー Release lever	1	B-5 B19-6		△	
518A	シーソーレバー See-saw lever	1	B-1 B-5	10 10-1	○△	
519	レリーズレバー軸 Release lever shaft	2	B-1 B-5	10 10-1	○△	
519A	偏心調整ピン Eccentric pin	1	B-1 B-5 B19 B19-6		△	
527-1	レリーズ軸 Shutter release shaft	1		13 13-1	○	

部品表 Parts List

35FB-R-3012-A

部品番号 Part No.	名称 Name	1台個数 Pcs. per Unit	部組品No. Sub-assembly No.	参照図番 Reference Fig. No.	販売区分 Term of Sale	備考 Remarks
540B	MDスイッチ絶縁板B MD-switch insulation plate B	1	K K3	2	○△	
540C	MDスイッチ絶縁板C MD-switch insulation plate C	1	K K3	2	○△	
540D	MDスイッチ絶縁板D MD-switch insulation plate D	1	K K3	2	○△	
541	管制部 Shutter speed control	1	R		△	
541A	シャッターダイヤル管 Shutter dial tube	1	R R1	5 5-1	○△	
541B	シャッター目盛板 Shutter speed scale	1	R R1 R2		△	
541C	ボタン飾り座 Washer	1	R R1 R2		△	
541D	セットビス Set screw	3	R	5 5-1	○△	
541E	ロック解除ボタン Rewind lock release button	1	R		△	
541F	ロック解除板 Rewind lock release plate	1	R		△	
558	FRE絶縁板 FRE insulator	1	F2		△	
570	マニュアル抵抗体 Manual-setting resistor	1	R		△	
575 (01)	飾り環 Cover ring	1	C	1 1-1	○△	
575 (02)	飾り環 Cover ring	1	C	1 1-1	○△	

部品番号 Part No.	名称 Name	1台個数 Pcs. per Unit	部組品No. Sub-assembly No.	参照図番 Reference Fig. No.	販売区分 Term of Sale	備考 Remarks
577	飾り環座金 Cover ring washer	1	C	1 1-1	○△	
630	FREプリント板 FRE printed circuit	1	J		△	
631	ブラシギア制限 Brush gear stopper	1	J		△	
631A	Jプリント板座板 J print plate holder	1		6-1	○	
632	ブラシギア制限ピン Brush gear stopper pin	1	J		△	
633	チェッカーばね Checker spring	1	J		△	
634	チェッカーばねカラー Checker spring collar	1	J		△	
635	チェッカーばねピン Checker spring pin	1	J		△	
636	チェッカーばね座金（1×3.5×0.4） Checker spring washer	1	J		△	
637	チェッカーレバー Checker lever	1	C C5		△	
638	チェッカーレバー軸 Checker lever axle	1	C C5		△	
639	止め輪 Snap ring	1	C	1 1-1	○△	
641	止め輪 Snap ring	1	F	6 6-1	○△	
642	E－リング（E－10） E-ring	2	B-1,B7 B25 B-5 B25-6	10 10-1	○△	

部品表 Parts List

35FB-R-3012-A

部品番号 Part No.	名称 Name	1台個数 Pcs. per Unit	部組品No. Sub-assembly No.	参照図番 Reference Fig. No.	販売区分 Term of Sale	備考 Remarks
643	チェッカー窓 Checker window	1	C C5		△	
651	巻戻し軸受 Rewind shaft bearing	1		6	○	
651-1	巻戻し軸受 Rewind shaft bearing	1		6-1	○	
652-1	巻戻し軸 Rewind shaft	1		7 7-1	○	
653	巻戻ノブ Rewind knob	1		7 7-1	○	
655	巻戻軸受板用ばね（d＝0.26） Spring	1		7 7-1	○	32FB1 #605
657	巻戻ツマミ Rewind crank knob	1	H1-1		△	32FB1 #607
658	巻戻ツマミ軸 Rewind crank knob shaft	1	H1-1		△	32FB1 #608
659	開閉ノブ押えクリップ Cover latch retaining clip	1		7 7-1	○	32FB1 #692
660	巻戻軸座金（3×6×0.5） Rewind shaft washer	1		7 7-1	○	32FB1 #610-1
662	フリクションばね（d＝0.32） Friction spring	1		7 7-1	○	
664-1	開閉ノブ O.C. knob	1		7 7-1	○	32FB1 #664
665-1	巻戻軸ガイド Rewind shaft guide	1		7 7-1	○	
667	ASAダイヤル基板 ASA dial mount	1	F1		△	

部品表 Parts List

35FB-R-3012-A

部品番号 Part No.	名称 Name	1台個数 Pcs. per Unit	部組品No. Sub-assembly No.	参照図番 Reference Fig. No.	販売区分 Term of Sale	備考 Remarks
668 (01) (02)	ASAダイヤル ASA dial	1	F4A		△	
669	ASAクリックボタン ASA click button	1		7 7-1	○	
670	ASAクリックばね ASA click spring	1		7 7-1	○	
671	ASA目盛貼付環 ASA dial base disk	1	F	7 7-1	○△	
672	ASA目盛板 ASA dial	1	F	7 7-1	○△	
676	ASAクリック板 ASA click plate	1	F	7 7-1	○△	
677	FRE回転軸 FRE shaft	1	F		△	
678	FRE環 FRE ring	1	F2		△	
679-1	FRE絶縁板 FRE insulating plate	1	F2		△	
682	ブラシA Brush A	1	F3		△	
683	ブラシ板 Brush mount	1	F3		△	
684-1	FRE導電盤 FRE conducting plate	1	F2		△	
685-1	摺動ブラシA Sliding brush A	1	J		△	
686	ブラシギヤー Brush gear	1	F	6 6-1	○△	

部品表 Parts List

35FB-R-3012-A

部品番号 Part No.	名称 Name	1台個数 Pcs. per Unit	部組品No. Sub-assembly No.	参照図番 Reference Fig. No.	販売区分 Term of Sale	備考 Remarks
687	目盛貼付環押え板 ASA dial base disk retainer	1	F	7 7-1	○△	32FB1 #641-1
688	開閉ロックレバー Rewind knob lock lever	1		7 7-1	○	
689	ロックレバー軸 Knob lock lever shaft	1		7 7-1	○	32FB1 #660
691	ASAダイヤル受座 ASA dial mount	1		7 7-1	○	
692	露出補正ばね Exposure correction spring	1	F	7 7-1	○△	
693	ASA連動環 ASA coupler	1	F	7 7-1	○△	
694	ブラシ用ゼンマイ Brush spring	1	B25 B25-6		△	
695	露出補正クリックピン Exposure correction click pin	1	F4A		△	32FB1 #691
697	ブラシナット Brush nut	1	F	6 6-1	○△	
698	摺動ブラシB Sliding brush B	1	F	6 6-1	○△	
706	裏蓋蝶番A Camera back hinge A	1		16-1	○	
708	止め爪B Latch B	1		16-1	○	
806-5	小ねじ JCIS ⊕ PM 1.7x1.8 Type (1) Screw	1	B-1 B-5	14 14-1	○△	
807	小ねじ JCIS ⊕ PM 1.7x2.2 Type (3) Screw	1	B-1	11	○△	

部品表 Parts List

35FB-R-3012-A

部品番号 Part No.	名称 Name	1台個数 Pcs. per Unit	部組品No. Sub-assembly No.	参照図番 Reference Fig. No.	販売区分 Term of Sale	備考 Remarks
807-6	小ねじ JCIS ⊕ PM 1.7 x 2 Type (3) Screw	1	B-5	11-1	○△	
818	小ねじ JCIS ⊕ PM 1.7 x 3.0 Type (3) Screw	1	B-1 B-5	10 10-1	○△	
822	ASA目盛貼付環制限 ASA-dial base dish stopper	2		7 7-1	○	
826-1	ブラシ板ビス Brush	8	F	6, 6-1 7, 7-1	○△	
827-1	小ねじ JCIS ⊕ PM 1.4 x 2.0 Type (1) Screw	3	B-1 B25 N1	9, 10 9-1	○△	
828	小ねじ JCIS ⊕ CM 2 x 2.5 Type (1) Screw	1	B-1	9	○△	
829	小ねじ ⊕ PTB 2 x 2.8 Screw	1		9 9-1	○	
834	小ねじ JCIS ⊕ PM 2 x 2 Type (1) Screw	1	B-1	11	○△	
834-6	小ねじ JCIS ⊕ PM 2 x 2.2 Type (1) Screw	1	B-5	11-1	○△	
836	小ねじ JCIS ⊕ PM 2 x 2.8 Type (1) Screw	5	B-1 B-5	6 10 10-1	○△	
837	MDスイッチ取付ビス ⊖ 1.4 x 2 MD switch screw	1	K	2	○△	
839-1	ミラースイッチ止めビス ⊕ 1.7 x 5 Mirror switch screw	2	B-1 B-5	10 10-1	○△	
839A	小ねじ JCIS ⊕ PM 1.7 x 5 Type (3) Screw	1		9 9-1	○	
861-1	FREプリント板ビス ⊕1.7 x 3 FRE printed screw	5		6, 6-1 7, 7-1	○	S-0127B

部品表 Parts List

35FB-R-3012-A

部品番号 Part No.	名称 Name	1台個数 Pcs. per Unit	部組品No. Sub-assembly No.	参照図番 Reference Fig. No.	販売区分 Term of Sale	備考 Remarks
862	小ねじ JCIS ⊕ PM 1.7 x 1.5 Type (1) Screw	2	B-1 B-5	9 9-1	○△	
873	小ねじ JCIS ⊕ PM 1.7 x 3.5 Type (3) Screw	4	C	1 1-1	○△	
877	シャッターレリーズレバー軸ビス Shutter release lever axle screw	1	B-1	11	○△	
878-6	ダウン係止レバーストッパー Down-stopper lever stopper	1	B-5 B15-6		△	
880	Bレバー解除ビス B-lever release screw	1		13 13-1	○	
884-5	小ねじ JCIS ⊕ CM 1.7 x 2.5 Type (1) Screw	1	B-5	11-1	○△	
885-5	小ねじ JCIS ⊕ PM 1.7 x 2.5 Type (3) Screw	1	B-5	11-1	○△	
886-5	側面基板止めビス Side plate set screw	1	B-5	11-1	○△	
896	連動板取付ビス ⊖ 1.4 x 2.2 Aperture coupling plate screw	2	F	7 7-1	○△	32FB #846
898-1	Sダイヤル基板ビス Shutter dial screw	3	B-5 B25-6	5 5-1	○	
899	ブラシ連動ギヤビス Brush gear screw	2	B-5 B25-6	10-1	○△	
904	MDスイッチ接片A MD switch contact A	1	K K3	2	○△	
905	MDスイッチ接片B MD switch contact B	1	K K3	2	○△	
925	シャッタースイッチA Shutter switch A	1	B-1 B-5 B9 B9-6		△	

部品表 Parts List

35FB-R-3012-A

部品番号 Part No.	名称 Name	1台個数 Pcs. per Unit	部組品No. Sub-assembly No.	参照図番 Reference Fig. No.	販売区分 Term of Sale	備考 Remarks
926	シャッタースイッチB Shutter switch B	1	B-1 B-5 B9 B9-6		Δ	
927	ミラースイッチA Mirror switch A	1	B-1 B-5 B9 B9-6		Δ	
928	ミラースイッチB Mirror switch B	1	B-1 B-5 B9 B9-6		Δ	
930	ミラースイッチ調整ビス SR 1.4 x 2.5 Mirror switch adjusting screw	1	B-1	9	○Δ	
930-6	ミラースイッチ調整ビス Mirror switch adjusting screw	1	B-5	9-1	○Δ	
931	ミラースイッチ絶縁板A Mirror switch insulator A	1	B-1 B-5 B9 B9-6		Δ	
932	ミラースイッチ絶縁板B Mirror switch insulator B	1	B-1 B9		Δ	
932-6	ミラースイッチ絶縁板B Mirror switch insulator B	1	B-5 B9-5		Δ	
933	ミラースイッチ絶縁板C Mirror switch insulator C	1	B-1 B-5 B9 B9-6		Δ	
934	メモリースイッチA Memory lock switch A	1	B-1 B-5	10 10-1	○Δ	
935	メモリースイッチB Memory lock switch B	1	B-1 B-5	10 10-1	○Δ	
936	Mスイッチ絶縁板C Memory switch insulator C	1	B-1 B-5	10 10-1	○Δ	
937	Mスイッチ絶縁板B Memory switch insulator B	1	B-1 B-5	10 10-1	○Δ	
939	絶縁ルミラー Front plate insulator	1	B-1	10	○Δ	

部品表 Parts List

35FB-R-3012-A

部品番号 Part No.	名称 Name	1台個数 Pcs. per Unit	部組品No. Sub-assembly No.	参照図番 Reference Fig. No.	販売区分 Term of Sale	備考 Remarks
941	シュー連結接点A Shoe connecting contact A	1	M4		△	
942	シュー連結接点B Shoe connecting contact B	1	M4		△	
943A	Fミラー調整座金(1.6×2.8×0.2) Washer	1	N1	9 9-1	○△	
943B	Fミラー調整座金(1.6×2.8×0.4) Washer	1	N1	9 9-1	○△	
943C	Fミラー調整座金(1.6×2.8×0.6) Washer	1	M	9 9-1	○△	
943D	Fミラー調整座金(1.6×2.8×0.8) Washer	1	N1	9 9-1	○△	
944A	グンカン貼付ゴム Rubber	1	C	1 1-1	○△	
944B	Jプリント板ゴム J print rubber	1		6 6-1	○	
945A	FRギヤ調整ワッシャー(6×10×0.05) Washer	1		6 6-1	○	
945B	FRギヤ調整ワッシャー(6×10×0.1) Washer	1		6 6-1	○	
945C	FRギヤ調整ワッシャー(6×10×0.07) Washer	1		6 6-1	○	
946	シャッタースイッチ押え板 Shutter switch retainer	1	B-1 B9 B-5 B9-5	10 10-1	○△	
947-1	シャッター後遮光ゴム Light tight	1		13	○	
948	F窓遮光テープ Light-baffle tape	1	B30	8 8-1	○△	

部品表 Parts List

35FB-R-3012-A

部品番号 Part No.	名称 Name	1台個数 Pcs. per Unit	部組品No. Sub-assembly No.	参照図番 Reference Fig. No.	販売区分 Term of Sale	備考 Remarks
949-5	側面飾りモールド Side plate mould	1			○	Dis.
951	ダンパーワッシャー（1.5×5×0.3） Washer	1	B-5	10-1	○△	
952-5	グリップリング Grip ring	4	B-5 B15-7	11-1	○△	
RA	F-フィルム F-Film	1	R	5-1	○△	
RB	F-フィルム止めビス F-Film screw	1	R	5-1	○△	
RF	F-フィルムワッシャー F-Film washer	1	R	5-1	○△	

部品表 Parts List

35FB-R-3012-A

部品番号 Part No.	名称 Name	1台個数 Pcs. per Unit	部組品No. Sub-assembly No.	参照図番 Reference Fig. No.	販売区分 Term of Sale	備考 Remarks
G2B (03)	フレネルBタイプ Fresnel screen B type	1			○	
G2E (03)	フレネルEタイプ Fresnel screen E type	1			○	
G2K	フレネルKタイプ Fresnel screen K type	1		9 9-1	○ ◎	
G2K (03)	フレネルKタイプ Fresnel screen K type	1		9 9-1	○	
G4	接眼レンズ Eyepiece lens	1	N4		△	
G5	接眼レンズ Eyepiece lens	1	N4		△	
G8	集光レンズ Condenser lens	2	N4		△	
G9	レンズ Lens	1	B-1 B-5 B30 B30-6		△	
G10	レンズ Lens	1	N1	9 9-1	○△	

部組品一覧表 Subassembly list

35FB-R-3012-A

部組品番号 No. of Sub-assembly	名称 Name	1台個数 Pcs. per Unit	構成部品番号 No. of Constituent Parts	参照図番 Reference Fig. No.	備考 Remarks
A11	下地板 Lower base plate	1	126A,B, 135, 416-1, 417-2 418, 419, 422, 423, 425 426x3, 427, 440, 443, 444 445, 446A-5, 448, 450, 452 457, 487, 488, 496, 497x24 516-1, 517, 534, 540Ax2 819x2 A12	3	
B-1 (01) (02)	前板 Front plate	1	6, 19, 20, 36A-1, 36B-1, 42 54, 59, 61-1, 65-1, 201, 202 208x3, 214-6, 214A-6 215-6, 217-6, 218, 222 240, 261, 266, 267, 291-6 313-5, 314, 318-6, 320, 321 328, 329, 330, 331-6, 338 340, 341, 344-5, 348, 349 357-6, 361, 375-5, 383-1 394, 395, 518A, 519x2 805x4, 806-5x6, 807-6 810x2, 812x2, 813, 818 823A-D, 825-5x2, 828, 834 836x2, 839-1x2, 842Mx1 842Px4, 862x2, 863-5, 877 878-6, 930, 934, 935, 936 937, 939, 946, B1, B2, B4, B7, B9-1, B10 B12, B13-1, B14, B16, B17-1 B19, B20, B22-1, B25, B26 B27, B30, B32, B33-2, B35 B37-1, B38-5, B39	8 9 11 12	
B-5	前板 Front plate	1	19, 20, 36A-1, 36B-1, 42 54, 65-1, 202-5, 208-6 216, 218, 240-5, 250, 261 313-5, 314, 318-6, 375-5 383-1, 394, 395, 518A 519x2, 805x4, 807-6 810x2, 812-5x2, 813, 818 825-5x2, 834-6, 836x2 839-1x2, 842M, 842Px4 862x2, 863-5x3, 884-5 885-5, 886-5, 930-6, 934 935, 936, 937, 951 B1, B2-6, B4-6, B6-6, B7-6 B9-6, B15-7, B19-6, B20-1 B22, B25-6, B26-6, B27-5 B30-6, B32, B35-6, B36-6 B38-5 810x2 (工具用)	8-1 9-1 11-1 12-1	

部組品一覧表 Subassembly list

35FB-R-3012-A

部組品番号 No. of Sub-assembly	名称 Name	1台個数 Pcs. per Unit	構成部品番号 No. of Constituent Parts	参照図番 Reference Fig. No.	備考 Remarks
B2	セルフ連動レバー Self-timer lever	1	17, 18, 41	9	
B2-6 (01) (02)	セルフ連動レバー Self-timer lever	1	18, 41, 17-6	9-1	
B4 (01) (02)	絞り連動環 Aperture coupling ring	1	206, 207, 209, 210, 211 223, 893x2	8	
B4-6 (01) (02)	絞り連動環 Aperture coupling ring	1	209-6, 210-6, 211-6, 223-6	8-1	
B6-6	着脱釦 Lens release button	1	217-6, 212-6, 214-6, 214A-6 215-6, 642	10-1	
B7	連動コロ Roller lever	1	262, 263, 264, 265	10	
B7-6	連動コロ Roller lever	1	265-6, 262-6, 263-6	11-1	
B9-1	ミラースイッチ Mirror switch	1	128A,B, 139, 140, 925, 926 927, 928, 931x3, 932, 933 946	10	
B9-6	ミラースイッチ Mirror switch	1	933, 925, 926, 927, 928 931x3, 946, 932-6, 128 139, 140	10-1	
B11-6	大レバー Large lever	1	333-6, 335-5	12-1	
B12	ミラーアップレバー Mirror-up lever	1	322, 327, 356x2, 378-5 379-1, 380, 381	11	
B12-6	ミラーアップレバー Mirror-up lever	1	322, 327, 356x2, 378-5 379-6, 380-6	11-1	
B13-1	ミラーダウンレバー Mirror-down lever	1	323, 325-1, 350-5, 358 359, 372, 375-5	11	

部組品一覧表 Subassembly list

35FB-R-3012-A

部組品番号 No. of Sub-assembly	名称 Name	1台個数 Pcs. per Unit	構成部品番号 No. of Constituent Parts	参照図番 Reference Fig. No.	備考 Remarks
B15-7	横基板 Mirror box side plate	1	300-5, 246-5, 247-5, 291-6 317-6, 320-6, 321, 326-6 326A, 328, 329-6, 330 331-6, 339-6, 340, 341, 344-5, 348, 349-6, 357-6 370-6, 389, 391, 823A ~ D 878-6, 952-5x4, B10, B12-6 B13-6, B14, B33-2	11-1	
B16	45° ストッパー 45° stopper	1	317, 337, 339, 389, 391	9	
B17-1	ミラーレバー軸取付板 Mirror lever shaft base	1	324, 377	11	
B19	レリーズレバー Release lever	1	518, 519A	10	
B19-6	レリーズレバー Release lever	1	518-6, 519A	10-1	
B22-1	スクリーン枠 Screen frame	1	245, 243x4, 244-2	11-1	
B25	ブラシ連動ギアー Brush coupling gear	1	224, 225, 226, 229, 268 269, 642, 694, 827-1x2	10	
B25-6	ブラシ連動ギアー Brush coupling gear	1	224, 642, 694, 899x2, B23, B24-6	10-1	
B26	ミラーチリトリ Mirror holder	1	301-1, 304, 305, 306x4 307, 308, 345, 346 373-1x2, G1	11	
B26-6	ミラーチリトリ Mirror holder	1	301-1, 304, 305, 306x4 307-6, 308, 345, 346 373-1x2, G1	11-1	
B27	手動絞りレバー Stop-down lever	1	310-1, 311-6	11	
B30 (01)(02)	前カバー銘板 Front cover	1	2, 237-2, G9	8	
B30-6 (01)(02)	前カバー銘板 Front cover	1	2-6, 237-2, G9	8-1	

部組品一覧表 Subassembly list

35FB-R-3012-A

部組品番号 No. of Sub-assembly	名称 Name	1台個数 Pcs. per Unit	構成部品番号 No. of Constituent Parts	参照図番 Reference Fig. No.	備考 Remarks
B32	絞り込みレバー Diaphragm set lever	1	309, 311A	11 11-1	
B34	巻上側ミラー軸止め板 Mirror shaft stopper, advance-lever side	1	248, 302, 332-5	11	
B35	巻戻側ミラー軸止め板 Mirror shaft stopper, rewind-knob side	1	248, 302, 332-5	11	
B35-6	巻戻側ミラー軸上地板 Mirror shaft stopper, rewind-knob side	1	332-5, 248-6, 302-6	11-1	
B36-6	底基板 Bottom base plate	1	287-6, 270-5, 281-1, 282-6 283-5, 284-6, 334-5, 343A-6 352-2, 353-6, 355-2, 367-5 368-5, 362-6, 363-6, B11-6	12-1	
B37-1	ブレーキ部組 Shutter brake	1	270-5, 281-1, 282, 283-5 284-1, 287-1, 334-5, 343A 352-2, 353-1, 355-2, 362, 363 367-5, 368-5, 342, 355A B11	12	
B39	プリズムボックス Prism box	1	250, 252A	9	

部組品一覧表 Subassembly list

35FB-R-3012-A

部組品番号 No. of Sub-assembly	名称 Name	1台個数 Pcs. per Unit	構成部品番号 No. of Constituent Parts	参照図番 Reference Fig. No.	備考 Remarks
C (01)(02)	上蓋部 Top cover	1	3, 7, 67,68, 69, 73, 74A,B 76-1, 84, 468, 469-6, 470-5 491, 493A ~ C, 535A, 535B 503-1, 575, 577, 639 873x4, 78, 95, 944A C1, C5, C6, C7	1	
C-6 (01)(02)	上蓋部 Top cover	1	3-6, 7, 67, 68, 69, 73, 74A, B 76-1, 84, 468, 469-6, 470-5 491, 493A ~ C, 535A, 535B 503-1, 575, 577, 639, 873x4 78, 95, 944A, C1, C5, C6, C7	1-1	
C1	シュー座モールド Hot-shoe mould	1	66, 75, 77	1 1-1	
C5	チェッカーレバー Checker lever	1	637, 638, 643	1 1-1	
C6	レディライトプリント板 Ready-light printed circuit	1	109, 94	1 1-1	
F (01)(02)	FRE 部 FRE	1	641, 669, 670, 687, 698 686, 687, 671, 672, 676 692, 693, 822x2, 896x2 826-1x3, 945A, B, C F1, F2, F3	6, 6-1 7, 7-1	
F1	ASA ダイヤル基板 ASA dial mount plate	1	667, 677	6, 6-1 7, 7-1	
F2	FRE 環 FRE ring	1	678, 680, 684-1, 679-1	6 6-1	
F3	ブラシA Brush A	1	682, 683	6 6-1	
F4A (01)(02)	ASA ダイヤル ASA dial	1	668, 695	7 7-1	
H1-1	巻戻しレバー Rewind crank	1	654-1, 657, 658	7, 7-1	
J	FRE プリント板 Printed circuit	1	630, 631, 632, 633, 634 635, 636, 685-1, 111, 112 121, 122, 123, 124, 130 133, 144	6 6-1	

部組品一覧表 Subassembly list

35FB-R-3012-A

部組品番号 No. of Sub-assembly	名称 Name	1台個数 Pcs. per Unit	構成部品番号 No. of Constituent Parts	参照図番 Reference Fig. No.	備考 Remarks
K	上地板 Upper base plate	1	136, 137, 404A, 405-2, 409 411, 451, 477, 482x2 483x5, 483A-1, 482x2 483x5, 483A-1, 484A-1x2 485, 490, 502-1, 505, 506 507, 508, 509, 512, 514 520, 521, 523, 526 532-1, 533, 812-5x2, 831 837, K3, K4, K5, K6	2	
K-6	上地板 Upper base plate	1	451-6, 126-5, 404A, 405-2 409-6, 411, 473-6, 476-6 477, 482-6x2, 483-6x5 484-6, 485-6, 488-6, 488A-5 490-1, 502-1, 505-6, 508-6 509-6, 510-6, 511-6, 521-6 522-6, 522A-5, 526, 532-6 533, 534-6, 487-6, 540A-6 812A-5, 831-6, 844-5	2-1	
K3	MDスイッチ MD switch	1	540B, 540C, 540D, 904, 905	2	
K4	スイッチレバー Lever switch	1	478-2, 484, 486-1	2	
M	ICプリント板 IC printed circuit	1	101-2, 102, 103-1, 106, 107 108, 113, 114, 115, 116, 117, 118A,B, 120, 231-1 258x2, 145, 146	9, 9-1	
N1	ミラー保持基板 Mirror retaining base plate	1	235, 236, 238, 239, 827-1 875x2, 943A,B,C,D, G6x2 G10	9, 9-1	
N4	接眼モールドメガネ Eyepiece mold	1	259, 254x2, 255, 257x2 941, 942, G8x2, G4, G5	9, 9-1	
P3-1 (01)(02)	巻上レバー Wind-up lever	1	401-1, 401A-1, 495, 832x2	1 1-1	
P4	スイッチ制限 Switch lock lever	1	472, 474-1, 475	2	
R	管制部 Shutter speed control	1	541, 131, 132, 541Dx3 570, 541E, 541F, R1	5 5-1	
R1	シャッターダイヤル Shutter dial	1	541A, R2	5 5-1	
R2	シャッター目盛板 Shutter speed scale	1	541B, 541C	5 5-1	

P33FB

部　品　表

Parts List

dscamera

部品表 Parts List

P33FB-R-3012-A

部品番号 Part No.	名称 Name	1台個数 Pcs. per Unit	部組品No. Sub-assembly No.	参照図番 Reference Fig. No.	販売区分 Term of Sale	備考 Remarks
4 (01) (02)	底蓋 Bottom plate	1	B-1		Δ	
4A	底蓋遮光シート Bottom light baffle	1	D-1	14 14-1	○Δ	
8-1	接眼窓 Eyepiece ring	1	C C4		Δ	
8A	接眼ゴム Eyepiece rubber	1	C C4		Δ	
9	接眼ガラス押えばね Eyepiece glass clip	1	C C4		Δ	31F3B #392
10	三脚座 Tripod socket	1		14 14-1	○	
11-1	吊環 Eyelet	2	A2-1		Δ	
12	耳スプリング Eyelet bush	2	A2 A2-1		Δ	32FB1 #12
13	ターミナルキャップ Terminal cap	1		6 6-1	○	32FB1 #15A S-3071
15	シンクロソケット Synch. socket	1		6 6-1	○	S-8504
16	セルフ指あて Self-timer lever knob	1	B-1 B-5 B1		Δ	
16A	セルフ作動レバー Self-timer lever	1	B-1 B-5 B1		Δ	
21-5	チャージレバー Charge lever	1	A6-5		Δ	
22	チャージレバーピン Charge lever pin	1	A6 A6-5		Δ	
11	吊環 Eyelet	2	A2		Δ	

部品表 Parts List

P33FB-R-3012-A

部品番号 Part No.	名称 Name	1台個数 Pcs. per Unit	部組品No. Sub-assembly No.	参照図番 Reference Fig. No.	販売区分 Term of Sale	備考 Remarks
23-5	チャージレバーローラ Charge lever roller	1	A6 A6-5		△	
24	抜け止め座板 Washer	2	A4 A4-1 A6 A6-1		△	
25-1	MD・SW連動レバー Motor switch coupling lever	1		13	○	
25-3	MD・SW連動レバー MD switch coupling lever	1		13-1	○	
26-1	空撮り防止レバー Blank exposure preventer lever	1		13	○	
26-2	空撮り防止レバー Blank exposure preventer lever	1		14-1	○	
28-1	MD信号レバー軸 MD signal lever axle	1		13	○	
28-2	MD信号レバー軸 MD signal lever axle	1		13-1	○	
29	空撮り防止レバー軸カラー Blank exposure preventer lever collar	1		13	○	
29-1	MD信号レバー座金 MD signal lever washer	1		13-1	○	
30-1(03)(04)	MD信号レバーばね MD signal lever spring	1		13	○	
31-1(03)(04)	底部押え板 Retaining plate, bottom	1		14	○	
31-2	底部押え板 Retaining plate, bottom	1		14-1	○	
32	シャッターチャージレバー Shutter charge lever	1	A4		△	

部品番号 Part No.	名称 Name	1台個数 Pcs. per Unit	部組品No. Sub-assembly No.	参照図番 Reference Fig. No.	販売区分 Term of Sale	備考 Remarks
32-1	シャッターチャージレバー Shutter charge lever	1	A4-1		Δ	
33	ミラーチャージピン Mirror charge pin	1	A4		Δ	
33-1	ミラーチャージピン Mirror charge pin	1	A4-1		Δ	
35	ミラーチャージピンカラー Mirror charge pin collar	1	A4 A4-1		Δ	
37-1	シャッターチャージ爪 Shutter charge claw	1	A4 A4-1		Δ	
38-1	チャージ爪かしめピン Rivet shutter charge pin	1	A4 A4-1		Δ	
43-2	電池ケース Battery chamber	1	A5-2		Δ	
44	電池キャップ Battery chamber cap	1	P5		Δ	S-3726A
45-1	電池アース接片 Battery chamber earth contact	1		14 14-1	○	
46	電池ホルダー Battery holder	1	P5		Δ	S-3104
47	電池⊕接片A Battery contact A ⊕	1	A5 A5-2		Δ	
48	電池接片かしめ鋲 Battery contact rivet	1	A5 A5-2		Δ	
49	電池⊕接片B Battery contact B ⊕	1	A5 A5-2		Δ	
50	ローラー Roller	1		16-1	○	

部品表 Parts List

P33FB-R-3012-A

部品番号 Part No.	名称 Name	1台個数 Pcs. per Unit	部組品No. Sub-assembly No.	参照図番 Reference Fig. No.	販売区分 Term of Sale	備考 Remarks
51	ローラー軸 Roller shaft	1		16-1	○	
54 (01) (02)	セルフレバービス Self-timer lever screw	1	B-1 B-5	9 9-1	○△	
55	セルフレバー用革 Leatherette	1		9 9-1	○	
58-1	溝用モルトプレン Light-tight (for groove)	1		16-1	○	
58A-1	上溝用モルトA Light-tight A	1		16-1	○	
58B-1	上溝用モルトB Light-tight B	1		16-1	○	
59	ミラーボックス下部モルト Mirror box bottom buffer	1	B-1 B-5	10 10-1	○△	
60	接眼下部遮光モルト Light-tight (for eyepiece)	1	B-1 B-5	13 13-1	○△	
63	シャッター羽根受けゴム Shutter curtain rubber	1	B-1 B-5	13 13-1	○	
64	緩衝ゴムA Shock absorb rubber A	1		14 14-1	○	
65-1 (01) (02)	小ねじ JCIS ⊕ PM 1.7 x 2.2 Type (1) Screw	1	B-1 B-5	8 8-1	○△	
69	押え接点 Upper shoe switch contact	1	C	1 1-1	○△	
70-1	受け接点 Lower shoe switch contact	1	C C7		△	
71-1	接点モールド Contact mold	1	C C7		△	

部品番号 Part No.	名称 Name	1台個数 Pcs. per Unit	部組品No. Sub-assembly No.	参照図番 Reference Fig. No.	販売区分 Term of Sale	備考 Remarks
73	押棒 Switch plunger	1	C	1 1-1	○△	31F3B #575
74A	シュー座金（1.8×3×0.15） Shoe washer	3	C	1 1-1	○△	
74B	シュー座金（1.8×3×0.3） Shoe washer	3	C	1 1-1	○△	
75	シンクロ接点 Synch. contact	1	C C-1		△	
82-1	シャッター上遮光モルト Light-tight, shutter top	1		13 13-1	○	
83-5	ミラーボックス後部遮光ゴム Mirror box rear light rubber	1	B-1 B38		△	
85-1	シャッターチャージレバー受ゴム Charge lever base rubber	1		14 14-1	○	
86-5	M. BOX後部遮光板 Mirror box rear light-baffle	1	B-1 B-5 B38 B38-5		△	
97-1	空撮り防止作動ばね Blank exposure preventer spring	1		14-1	○	
98-1	空撮り防止レバー軸 Blank exposure preventer lever axle	1		14-1	○	
126-5	上地スィッチコード Switch cord	1	K-6	14-1	○△	Orange, Purple, Red x 220mm
202	バイヨネット環 Bayonet	1	B-1	8	○△	
202-5	バイヨネット環 Bayonet	1	B-5	8-1	○△	
208	バイヨネットばね Bayonet spring	1	B-1	8	○△	32FB1 #208 S-1531

部品表 Parts List

P33FB-R-3012-A

部品番号 Part No.	名称 Name	1台個数 Pcs. per Unit	部組品No. Sub-assembly No.	参照図番 Reference Fig. No.	販売区分 Term of Sale	備考 Remarks
208-6	バイヨネットばね Bayonet spring	1	B-5	8-1	○△	
209	絞り連動片 Aperture coupling piece	1	B-1 B4		△	
209-6	絞り連動片 Aperture coupling piece	1	B-5 B4		△	
210	絞り連動片ばね Coupling piece spring	1	B B4	8	○△	
210-6	絞り連動片ばね Coupling piece spring	1	B-5 B4-6		△	
211	絞り連動片軸 Coupling piece shaft	1	B-1 B4		△	
211-6	絞り連動片軸 Coupling piece shaft	1	B-5 B4-6		△	
216	着脱ボタンばね Lens release button spring	1	B-5		△	32FB1 #216
218	着脱ボタン軸受 Lens release button sleeve	1	B-5		△	
223	連動片ばねボタン Coupling piece spring button	1	B-1 B4	8	○△	
223-6	連動片ばねボタン Coupling piece spring button	1	B-5 B4-6		△	
255	接眼レンズ押え板 Eyepiece retainer	1	N4		△	
257	絞り板 Diaphragm plate	2	N4		△	32FB #257 32FB1 #257
261	レンズ着脱ボタン飾 Lens release button pad	1	B-1 B-5	10 10-1	○△	32FB1 #269

部品表 Parts List

P33FB-R-3012-A

部品番号 Part No.	名称 Name	1台個数 Pcs. per Unit	部組品No. Sub-assembly No.	参照図番 Reference Fig. No.	販売区分 Term of Sale	備考 Remarks
270-5	グリップリング Grip ring	1	B-1 B-5 B37-1 B36-6	12 12-1	○△	
281-1	保持レバー Retaining lever	1	B-1 B-5 B36-6 B37-1	12 12-1	○△	
282	ブレーキ解除軸 Brake release axle	1	B-1 B37-1		△	
282-6	ブレーキ解除軸 Brake release axle	1	B-5 B36-6		△	
283-5	グリップリング Grip ring	1	B-1 B37-1 B-5 B36-6	12 10 12-1	○△	
284-6	ブレーキ解除軸ビス Brake release shaft screw	1	B-5 B36-6	12-1	○△	
287-1	M. BOX下部基板 Mirror box bottom base plate	1	B-1 B37-1		△	
287-6	M. BOX下部基板 Mirror box bottom base plate	1	B-5 B36-6		△	
288	ミラーダウン信号レバー Mirror-down signal lever	1	B-1 B14		△	
288-1	ミラーダウン信号レバー Mirror-down signal lever	1	B-1 B-5	11-1	○△	
289-1	ミラー係止レバーばね Mirror-holder lever spring (d=0.26)	1	B B-5 B14	11 11-1	○△	
290	係止レバーばねかけピン Spring retaining pin	1	B B14		△	

部品表 Parts List

P33FB-R-3012-A

部品番号 Part No.	名称 Name	1台個数 Pcs. per Unit	部組品No. Sub-assembly No.	参照図番 Reference Fig. No.	販売区分 Term of Sale	備考 Remarks
301-1	ミラーチリトリ Mirror holder	1	B B-5 B26 B26-6		△	
306	チリトリ駆動板カシメピン Caulking pin	4	B B-5 B26 B26-6		△	
307	チリトリピンA Mirror holder pin A	1	B B26		△	
307-6	チリトリピンA Mirror holder pin A	1	B-5 B36-6		△	
310-1	手動絞りレバー Manual stop-down lever	1	B B-5 B27 B27-5		△	
311-6	手動絞りレバー軸 Manual stop-down lever axle	1	B B-5 B27 B27-5		△	
312	手動絞りレバーピン Manual stop-down lever pin	1	B B-5 B10		△	
313-5	手動絞りレバーばね Manual stop-down lever spring	1	B-1 B-5	11 11-1	○△	
315	絞りレバー Diaphragm actuating lever	1	B-1 B-5 B10 B15-7		△	
316	絞りレバーばね掛け Diaphragm actuating lever spring mount	1	B-1 B-5 B10 B15-7		△	
317	45°ストッパー 45° stopper	1	B-1 B16		△	
318-6	手動絞りレバー座 Manual stop-down lever plate	1	B-1 B-5	11 11-1	○△	
320A	チャージレバー軸 Charge lever axle	1		13 13-1	○	
323-6	ミラーダウンレバー Mirror-down lever	1	B-5 B13-6 B15-7		△	

部品番号 Part No.	名称 Name	1台個数 Pcs. per Unit	部組品No. Sub-assembly No.	参照図番 Reference Fig. No.	販売区分 Term of Sale	備考 Remarks
324-1	アップレバー軸筒 Mirror-up lever tube	1	B-5 B33-2		Δ	
325-1	ダウンレバー軸筒 Mirror-down lever tube	1	B-1 B-5 B13 B13-6		Δ	
326A	ミラーレバー軸ワッシャー(4.6×7×0.05) Mirror lever shaft washer	1	B-1 B-5 B15-7	11 11-1	○Δ	
328	シグナルレバー Signal lever	1	B-1 B-5 B15-7	11 11-1	○Δ	
330	ミラーダウン係止レバー Mirror-down latch lever	1	B-1 B-5 B15-7	11 11-1	○Δ	
333-1	大レバー Mirror charge lever	1	B-1 B11		Δ	
333-6	大レバー Mirror charge lever	1	B-5 B11-6 B36-6		Δ	
334-5	大レバー軸 Mirror charge level axle	1	B-1 B-5 B37-1 B36-6		Δ	
335-5	大レバー軸ブッシュ Bush	1	B-1,B-5 B11 B11-6 B36-6		Δ	
340	絞りレバーばね Diaphragm actuating lever spring	1	B-1 B-5 B15-7	11 11-1	○Δ	
341	ミラーアップばね Mirror-up spring	1	B-1 B-5 B15-7	11 11-1	○Δ	
344-5	レバー押えビス Mirror holder screw	1	B-1 B-5 B15-7	11 11-1	○Δ	
345	ミラー押えA Mirror holder A	1	B-1 B-5 B26 B26-6		Δ	
346	ミラー押えB Mirror holder B	1	B-1 B-5 B26 B26-6		Δ	

部品表 Parts List

P33FB-R-3012-A

部品番号 Part No.	名称 Name	1台個数 Pcs. per Unit	部組品No. Sub-assembly No.	参照図番 Reference Fig. No.	販売区分 Term of Sale	備考 Remarks
350-5	ミラーアップレバー止めピン Mirror-up lever pin	1	B-1 B-5 B13 B13-6		Δ	
352-2	MD巻き上げ信号中間レバー MD take-up signal middle lever	1	B-1 B-5 B37-1 B36-6	12 12-1	○Δ	
353-6	MD巻上げ中間レバー軸 MD take-up middle lever axle	1	B-5 B36-6		Δ	
355-2	保持レバーばね(d = 0.4) Spring	1	B-1 B-5 B37-1 B36-6	12 12-1	○Δ	
356	調整ピン Adjusting pin	2	B-5 B12-6 B15-7		Δ	
358-6	ダウンレバー連結軸 Down lever connecting shaft	1	B-5 B13-6 B15-7		Δ	
359	連結軸ブッシュ Connecting shaft bush	1	B-1 B13		Δ	
362-6	ダウンレバー調整レバー Down lever adjusting lever	1	B-5 B21-6 B36-6		Δ	
363-6	ダウンレバー緩衝ゴム Shock absorb rubber	1	B-5 B36-6	12-1	○Δ	
367-5	ダウンレバー調整軸 Down lever adjusting axle	1	B-1 B-5 B36-6 B37-1		Δ	
368-5	ダウンレバー調整レバー軸 Down lever adjusting axle	1	B-1 B-5 B36-6 B37-1		Δ	
369	ダウンばね掛ピン Spring retaining pin	1	B-1 B11		Δ	
372	防振用ゴム Cushion rubber	1	B-1 B13-1 B-5 B13-6	11 11-1	○Δ	
373-1	ミラー押えかしめピン Mirror retainer rivet	2	B-1 B-5 B26 B26-6		Δ	

部品番号 Part No.	名称 Name	1台個数 Pcs. per Unit	部組品No. Sub-assembly No.	参照図番 Reference Fig. No.	販売区分 Term of Sale	備考 Remarks
375-5	ミラー巻上側ワッシャ Washer	1	B-1 B-5	11 11-1	○△	
376-1	絞りレバーばね掛 Diaphragm actuating lever spring stud	1	B-1 B-5 B32-2		△	
378-5	ミラースプリング(大) (d = 0.45) Mirror spring (L)	1	B-1 B-5 B12 B12-6	11 11-1	○△	
379-1	ミラースプリング(小) (d = 0.28) Mirror spring (S)	1	B-1 B12	11	○△	
379-6	ミラースプリング小 Mirror spring (S)	1	B-5 B12-6	11-1	○△	
380	ミラースプリング大軸 Mirror spring axle (L)	1	B-1 B12		△	
380-6	ミラースプリング軸 Mirror spring axle	1	B-5 B12-6		△	
381	ミラースプリング小軸 Mirror spring axle (S)	1	B-1 B12		△	
383	エアーダンパー駆動レバー Air damper lever	1	B-1	10	○△	
383-1	エアーダンパー駆動レバー Air damper lever	1	B-5	10-1	○△	
385-1	エアーダンパー駆動レバー受ピン Air damper lever pin	1	B-1 B20		△	
386-2	エアーダンパー連接棒 Air damper connecting shaft	1	B-1 B20		△	
386-3	エアーダンパー連接棒 Air damper connecting shaft	1	B-5 B20-1		△	
387	エアーダンパーピストン Air damper piston	1	B-1 B-5 B20 B20-1		△	

部品表 Parts List

P33FB-R-3012-A

部品番号 Part No.	名称 Name	1台個数 Pcs. per Unit	部組品No. Sub-assembly No.	参照図番 Reference Fig. No.	販売区分 Term of Sale	備考 Remarks
388	エアーダンパーシリンダー Air damper cylinder	1	B B-5 B20 B20-1		Δ	
389	45°出しレバー軸 45° adjusting pin	1	B B-5 B16 B15-7		Δ	
391	45° 出し調整ピン 45° adjusting pin	1	B B-5 B16 B15-7		Δ	
392	エアーダンパーシリンダー蓋（A） Air damper cylinder cover (A)	1	B B-5 B20 B20-1		Δ	
393-2	エアーダンパーシリンダー蓋（B） Air damper cylinder cover (B)	1	B B-5 B20 B20-1		Δ	
394	エアーダンパーホルダー Air damper holder	1	B-1 B-5	10 10-1	○Δ	
395	エアーダンパー駆動レバー止ビス Air damper lever screw	1	B-1 B-5	10 10-1	○Δ	
397-1	エアーダンパーゴム Air damper rubber	1	B B-5 B20 B20-1		Δ	
401-1 (01)(02)	巻上レバー Film-advance lever	1	P3-1		Δ	
402	巻上レバー用皮 Wind-up lever leatherette	1		1 1-1	○	
403-1 (01)(02)	レバー押えねじ Wind-up lever screw	1		1 1-1	○	
405-2	レバー軸ナット Lever axle nut	1	K K-6	2-1	○Δ	
408	巻上軸 Film-advance shaft	1		2 2-1	○	
408A	スプロ制限除板 Sprocket stopper release plate	1		2 2-1	○	

部品表 Parts List

P33FB-R-3012-A

部品番号 Part No.	名称 Name	1台個数 Pcs. per Unit	部組品No. Sub-assembly No.	参照図番 Reference Fig. No.	販売区分 Term of Sale	備考 Remarks
409	レバー軸受 Lever shaft bearing	1	K		△	
409-6	レバー軸受 Lever shaft bearing	1	K-6		△	
411	クリックレバー Click lever	1	K K-6		△	
412	三羽根爪押えばね Charge cam claw retaining spring	3	A18	3	○△	
412-6	面カム板ばね Clutch cam spring	1		3-1	○	
412B	三羽根爪軸 Charge cam claw shaft	6	A18		△	
413	巻上げカム Film advance cam	1		3	○	
413-6	巻上げカム Film advance cam	1		3-1	○	
414	三羽根爪 Charge cam claw	3	A18		△	
414A-5	面カムピン Clutch pin	1	A13-6		△	
414B-5	面カムねじりばね(d 0.2) Clutch spring	1		3-1	○	
414-6	面カム板 Clutch cam	1	A13-6		△	
415	巻上ギア Advance gear	1	A18		△	
415-6	巻上ギア Advance gear	1		3-1	○	

部品表 Parts List

P33FB-R-3012-A

部品番号 Part No.	名称 Name	1台個数 Pcs. per Unit	部組品No. Sub-assembly No.	参照図番 Reference Fig. No.	販売区分 Term of Sale	備考 Remarks
416-1	アイドルギアA Idle gear A	1	A11 A11-6		Δ	
417-2	アイドルギアB Idle gear B	1	A11		Δ	
417-6	アイドルギアB Idle gear B	1	A11-6		Δ	
418	アイドルギアC Idle gear C	1	A11		Δ	
419	アイドルギアC軸 Idle gear C shaft	1	A11		Δ	
420-1	スプール上ギア Spool top gear	1	A7		Δ	
421	スプール上ギアナット Spool top gear nut	1	A7		Δ	32FB1 #429A (~ 8)
422	巻上軸受ケース Film advance bearing case	1	A11		Δ	
422-6	巻上軸受ケース Film advance bearing case	1	A11-6		Δ	
423	ボール保持筒 Steel ball holding tube	2	A14 A11 A11-6		Δ	
424-1	スプールギア内筒 Spool gear inner tube	1	A7		Δ	
425	アイドルギア軸受ケース Idle gear bearing case	1	A11 A11-6		Δ	
426	軸受ケースカシメピン Bearing case caulking pin	3	A11 A11-6		Δ	
427	アイドルギアAワッシャ Idle gear A washer	1	A11 A11-6		Δ	

部品番号 Part No.	名称 Name	1台個数 Pcs. per Unit	部組品No. Sub-assembly No.	参照図番 Reference Fig. No.	販売区分 Term of Sale	備考 Remarks
429	スプロケット制限カム Sprocket stopper cam	1		4 4-1	○	
431	スプロ上ギア Sprocket upper gear	1		4	○	
431-6	スプロ上ギア Sprocket upper gear	1		4-1	○	
432	スプロケット上軸受 Sprocket shaft bearing	1		4	○	
432-6	スプロケット上軸受 Sprocket shaft bearing	1		4-1	○	
433	スプロケットカラー Sprocket collar	1		4	○	
434	スプロケット軸 Sprocket shaft	1		4	○	
434-6	スプロケット軸 Sprocket shaft	1		4-1	○	
435	スプロケットビス Sprocket screw	1		4 4-1	○	
435A	スプロケットビスA Sprocket screw A	1		4 4-1	○	
436-1	スプロケットローラーA Sprocket roller A	1		4 4-1	○	
437	スプロカラーAナット Sprocket collar A nut	1		4 4-1	○	
438	スプロ軸受 Sprocket shaft bearing	1		4	○	
438-6	スプロド軸受 Sprocket shaft bearing	1		4-1	○	

部品表 Parts List

P33FB-R-3012-A

部品番号 Part No.	名称 Name	1台個数 Pcs. per Unit	部組品No. Sub-assembly No.	参照図番 Reference Fig. No.	販売区分 Term of Sale	備考 Remarks
439	巻戻釦 Rewind button	1	D-1	4 14-1	○△	
440	逆点止爪軸 Anti-reversing claw shaft	1	A11 A11-6		△	
441	三羽根爪外しレバー軸 Charge cam claw release lever axle	1		13	○	
441-6	面カム外しレバー軸 Clutch cam release lever axle	1		13-1	○	
443	逆転止爪A Anti-reversing claw A	1	A11 A11-6		△	
444	逆転止爪B Anti-reversing claw B	1	A11 A11-6		△	
445	逆転防止爪ばね Anti-reversing claw spring	1	A11 A11-6		△	
446A-5	逆転防止爪ばねカシメピン Caulking pin	1	A11 A11-6		△	
447	スプロストッパー Sprocket stopper	1	A12		△	
447-6	スプロストッパー Sprocket stopper	1	A12-6		△	
448	スプロストッパー軸 Sprocket stopper axle	1	A11 A11-6		△	
449	ストッパーブッシュ Sprocket stopper bush	1	A12 A12-6		△	
450	スプロストッパー戻しばね（d＝0.3） Sprocket stopper returning spring	1	A11 A11-6	3 3-1	○△	
451-6	上地板 Upper base plate	1	K-6		△	

部品表 Parts List

P33FB-R-3012-A

部品番号 Part No.	名称 Name	1台個数 Pcs. per Unit	部組品No. Sub-assembly No.	参照図番 Reference Fig. No.	販売区分 Term of Sale	備考 Remarks
452	下地板 Lower base plate	1	A11		Δ	
452-6	下地板 Lower base plate	1	A11-6		Δ	
453	スプール軸 Spool shaft	1	A9		Δ	
454	スプール軸受ケース Spool shaft bearing shaft	1	A11		Δ	
455	スプール内筒 Spool inner tube	1	A8		Δ	
455A	スプール座金 Spool washer	1	A8		Δ	32FB1 #436-2
456-1	フリクション板 Friction plate	1	A7		Δ	
456A	フリクションばね Friction spring	1	A7		Δ	
456B-1	ばね受け皿 Spring tray	1	A7		Δ	
456C	ばね押え筒 Spring retaining tube	1	A9		Δ	32FB1 #499
457	ボールケース Ball case	2	A11 A11-6 A14		Δ	
458	セットカムピン Set cam pin	1	A10A-1 A10B-2		Δ	
459-1	セットカム Set cam	1	A10A-1 A10B-2		Δ	
460	セットカムカラー Set cam collar	1		4 4-1	○	32FB1 #491-1

部品表 Parts List

P33FB-R-3012-A

部品番号 Part No.	名称 Name	1台個数 Pcs. per Unit	部組品No. Sub-assembly No.	参照図番 Reference Fig. No.	販売区分 Term of Sale	備考 Remarks
461	カップリング支柱 Coupling strut	1	A10A-1 A10B-2		△	
462	振り子 Pendulum	1		14 14-1	○	
464	ロックレバー Lock lever	1		14 14-1	○	
465	ロックレバーばね Lock lever spring	1		14 14-1	○	
467-1	ゆるみ止めカラー Collar	1		4 4-1	○	
469	かぶせレリーズ環 Release ring	1	C	1	○△	
469-6	かぶせレリーズ環 Release ring	1	C	1-1	○△	
472	スィッチ制限軸 MD switch stopper axle	1	P4		△	
472-6	スィッチ制限軸 MD switch stopper axle	1	K-6		△	
473	スィッチ制限軸 Switch stopper axle	1		2	○	
477	スィッチ制限ストッパー Switch stopper	1	K		△	
473-6	スィッチ制限軸 Switch stopper axle	1	K-6		△	
476-6	スィッチばね（d＝0.35） Switch spring	1	K-6		△	
477-6	スィッチばね軸 Switch spring axle	1	K-6		△	

部品番号 Part No.	名称 Name	1台個数 Pcs. per Unit	部組品No. Sub-assembly No.	参照図番 Reference Fig. No.	販売区分 Term of Sale	備考 Remarks
482	巻上制限ピン Film advance stopper pin	2	K		△	
482-6	巻上制限ピン Film advance stopper pin	2	K-6		△	
483	クリックレバーばね Click lever spring	5	K	2	○△	
483-6	クリックレバーばね Click lever spring	5	K-6	2-1	○△	
483A-1	クリップレバーばね座板 Click lever spring washer	1	K		△	
484	スィッチレバー Switch lever	1	K		△	
484-6	スィッチレバー Switch lever	1	K-6		△	
484A-1	座板カシメピン Caulking pin	2	K		△	
485	スィッチレバーカラー Lever switch collar	1	K		△	
485-6	スィッチレバー軸 Switch lever axle	1	K-6		△	
487	主スィッチ切片A Lever switch contact A	1	A11	3	○△	
487A-5	ブラシ当板 Brush plate	1	K-6		△	
487-6	スィッチブラシ Switch brush	1	K-6		△	
488	主スィッチ切片B Lever switch contact B	1	A11	3	○△	

部品表 Parts List

P33FB-R-3012-A

部品番号 Part No.	名称 Name	1台個数 Pcs. per Unit	部組品No. Sub-assembly No.	参照図番 Reference Fig. No.	販売区分 Term of Sale	備考 Remarks
488-6	スィッチプリントシート Switch printed sheet	1	K-6		△	
488A-5	プリントシートカシメピン Printed sheet pin	1	K-6		△	
489	三羽根爪外レバー Charge cam claw release lever	1		13	○	
489-6	面カム外しレバー Clutch cam release lever	1		13-1	○	
489A	面カム外しレバー座金 Washer	1		13-1	○	
495	指あて Wind-up lever knob	1	P3-1	1 1-1	○△	32FB1#416
496	スプロ制限板ばね Sprocket stopper spring	1	A11	3	○△	
496-6	スプロ制限板ばね Sprocket stopper spring	1	A11-6	3-1	○△	
497	鋼球 Steel ball	48	A7 A11-6 A14		△	32FB1 #493
498	スプロケットばね（d = 0.35） Sprocket spring	1		4 4-1	○	32FB1 #444
499-1	スプロケット軸カラー Sprocket shaft collar	1		4	○	
502-1	枚数計 Frame-counter dial	1	K K-6	2 2-1	○△	
505	カウンターばね（d = 0.26） Counter spring	1	K	2	○△	
505-6	カウンターばね（d = 0.26） Counter spring	1	K-6	2-1	○△	

部品番号 Part No.	名称 Name	1台個数 Pcs. per Unit	部組品No. Sub-assembly No.	参照図番 Reference Fig. No.	販売区分 Term of Sale	備考 Remarks
506	止爪 Ratchet claw	1	K	2	○△	
507	止爪ナット Ratchet claw nut	1	K	2	○△	
508	止爪カラー Ratchet claw collar	1	K	2	○△	
508-6	零戻しレバーナット Counter reverse lever nut	1	K-6	2-1	○△	
509	クリックレバー軸 Click lever axle	1	K		△	
509-6	クリックレバーカラー Click lever collar	1	K-6	2-1	○△	
510-1	送り爪ギア Advance claw gear	1	K K-5		△	
510-6	送り爪ギア Advance claw gear	1	K-6	2-1	○△	
511-1	送り爪レバー Advance claw lever	1	K K5		△	
511-6	カウンタ連動ギア Counter gear	1	K-6	2-1	○△	
512	送り爪レバー軸 Advance claw lever axle	1	K	2	○△	
513-1	送り爪軸 Advance claw axle	1	K K5		△	
514	送り爪レバー軸カラー Advance claw lever axle collar	1	K	2	○△	
515-1	ばね掛けピン Spring retaining pin	1	K K5		△	

部品表 Parts List

P33FB-R·3012·A

部品番号 Part No.	名称 Name	1台個数 Pcs. per Unit	部組品No. Sub-assembly No.	参照図番 Reference Fig. No.	販売区分 Term of Sale	備考 Remarks
516-1	カウンター送り偏心軸 Counter advance eccentric shaft	1	A11		Δ	
517	偏心軸軸受 Eccentric shaft bearing	1	A11		Δ	
520	零戻しばねワッシャ Resetting spring washer	1	K		Δ	
521	零戻しばね（d＝0.26） Resetting spring	1	K	2	○Δ	
521-6	送り爪ばね Claw spring	1	K-6	2-1	○Δ	
522	零戻しレバー Counter reset lever	1	K K6		Δ	
522-6	零戻しレバー Counter reset lever	1	K-6	2-1	○Δ	
522A-5	零戻しレバーばね（d＝0.3） Counter reset lever spring	1	K-6	2-1	○Δ	
523	零戻しレバー軸 Counter reset lever axle	1	K	2	○Δ	
524	爪外しピン Claw release pin	1	K K6		○Δ	
526	クリックレバーあおり止め Click lever stopper	1	K		Δ	
527A	レリーズ軸補助 Release shaft supporter	1		13 13-1	○	
527B-1	レリーズ釦補助ばね（d＝0.14） Spring (d=0.14)	1		13 13-1	○	
528	スプール Spool	1	A8		Δ	

部品番号 Part No.	名称 Name	1台個数 Pcs. per Unit	部組品No. Sub-assembly No.	参照図番 Reference Fig. No.	販売区分 Term of Sale	備考 Remarks
529	スプール軸ばね Spool shaft spring (d=0.4)	1	A9		Δ	
530A	ラチェットカム Ratchet cam	1	A10A-1		Δ	
530B-1	ラチェットカム Ratchet cam	1	A10B-2		Δ	
531	スプロケット Sprocket	1		4	○	
531-6	スプロケット Sprocket	1		4-1	○	
532-1	ラチェット Ratchet	1	K	2	○Δ	
532-6	ラチェット Ratchet	1	K-6	2-1	○Δ	
533	指標板 Frame-counter index	1	K	2 2-1	○Δ	
534	スイッチ押え板 MD switch cover	1	A11	3	○Δ	
534-6	スイッチ押え板 MD switch cover	1	K-6		Δ	
535A	レリーズ釦 Release button	1	C	1 1-1	○Δ	32FB1 #459-2
535B	レリーズガイドビス Release guide screw	1	C	1 1-1	○Δ	
536	レリーズ軸ばね Release shaft spring (d=0.35)	1		13 13-1	○	
537	ARレバー AR lever	1		14	○	

部品表 Parts List

P33FB-R-3012-A

部品番号 Part No.	名称 Name	1台個数 Pcs. per Unit	部組品No. Sub-assembly No.	参照図番 Reference Fig. No.	販売区分 Term of Sale	備考 Remarks
537-6	ARレバー AR lever	1		14-1	○	
537A	ARレバー軸 AR lever axle	1		14	○	32FB1 #480
537B	ARレバーばね AR lever spring (d=0.18)	1		14	○	
538	振り子偏心軸 Pendulum eccentric axle	1		14 14-1	○	
538A	振り子ばね Pendulum spring (d=0.16)	1		14 14-1	○	32FB1 #484
539	ロックレバー軸 Lock lever axle	1		14 14-1	○	32FB1 #487
540	R釦スリーブ Rewind button sleeve	1	D D-1		△	
540A	MDスイッチ絶縁板 MD switch insulation plate	2	A11	3	○△	
540A-6	スイッチ絶縁板 Switch insulation plate	1	K-6		△	
654-1	巻戻レバー Rewind crank	1	A1-1		△	
656	レバー受ばね Rewind crank spring	1		7 7-1	○	
666-1	巻戻しレバー軸 Rewind crank shaft	1		7 7-1	○	
680	FRE FRE	1	F2		△	
701-1	裏蓋 Camera back	1	E1		△	

部品表 Parts List

P33FB-R-3012-A

部品番号 Part No.	名称 Name	1台個数 Pcs. per Unit	部組品No. Sub-assembly No.	参照図番 Reference Fig. No.	販売区分 Term of Sale	備考 Remarks
702-2	圧板 Pressure plate	1	E2		△	
703	圧板ばね Spring	1	E2		△	32FB1 #703
704-2	圧板鋲 Rivet	2	E2		△	S-1128A
705	圧板ばね支え鋲 Pressure plate spring stud	4	E1		△	
707	止め爪A Latch A	1	E1		△	32FB1 #707
709	止め爪カバー Latch cover	1		16-1	○	
710	蝶板芯金A Hinge shaft	1	E1		△	
711	止め爪用鋲 Latch rivet	2	E1		△	
712	パトローネ押えカシメピン Rivet	3	E1		△	
714	止め爪ばね (d = 0.35) Latch spring	1		16-1	○	
715	パトローネ押え Cartridge press spring	1	E1		△	
716	ローラ受け板 Roller bracket	1	E1		△	
717	ローラ受け板鋲 Roller bracket rivet	2	E1		△	
718	ローラー Roller	1	E1		△	

部品表 Parts List

P33FB-R-3012-A

部品番号 Part No.	名称 Name	1台個数 Pcs. per Unit	部組品No. Sub-assembly No.	参照図番 Reference Fig. No.	販売区分 Term of Sale	備考 Remarks
719	裏蓋遮光板 Camera back light baffle	1	E1		Δ	32FB1 #719
720	裏蓋蝶番B Camera back hinge B	1	E1		Δ	
721	裏蓋蝶番Bカシメピン Camera back hinge B rivet	7	E1		Δ	
722	蝶番芯金B Hinge shaft B	1	E1	15-1	○Δ	
723-1	メモホルダー枠 Memo holder frame	1	E1		Δ	
725	裏蓋用貼革 Back cover leatherette	1	E1	15-1	○Δ	
726	遮光モルトA Light-tight A	1	E1	15-1	○Δ	
727	遮光モルトB Light-tight B	1	E1	15-1	○Δ	
728	遮光モルトC Light-tight C	1	E1	15-1	○Δ	
730	遮光別珍B Light-baffle cloth B	2	E1	15-1	○Δ	
731	裏蓋着脱ピン Camera back release pin	1	E1	15-1	○Δ	
732	裏蓋着脱ばね（d＝0.26） Camera back release spring	1	E1	15-1	○Δ	30FB #629 S-1589
801	小ねじ JCIS ⊕ PM 2.0 x 3.0 Type (3) Screw	3		14 14-1	○	
802	小ねじ JCIS ⊕ PM 2.0 x 7.0 Type (1) Screw	1		13 13-1	○	

部品表 Parts List

P33FB-R-3012-A

部品番号 Part No.	名称 Name	1台個数 Pcs. per Unit	部組品No. Sub-assembly No.	参照図番 Reference Fig. No.	販売区分 Term of Sale	備考 Remarks
803(01)(02)	小ねじ JCIS ⊕ PM 1.7 x 3.0 Type (1) Screw	5		1 1-1	○	
804A(01)(02)	小ねじ JCIS ⊕ CM 1.7 x 2.5 Type (1) Screw	3		14 14-1	○	
804B	小ねじ JCIS ⊕ CM 1.7 x 2.5 Type (1) Screw	3		16-1	○	
805	バイヨネット止ビス Bayonet set screw	4	B-1 B-5	8 8-1	○△	32FB #805
810	前板取付ビス Front plate screw	8	B-5	9,9-1 14,14-1	○△	32FB #810
812-5	小ねじ JCIS ⊕ PM 1.7 x 2.5 Type (1) Screw	2	K B-1,B-5	2 10,10-1	○△	
812A-5	小ねじ JCIS ⊕ PM 1.7 x 2.0 Type (3) Screw	1	K-6	2-1	○△	
813(01)(02)	前カバービス ⊕ PM 1.7 x 3 Screw	1	B-5 B-1	8 8-1	○△	
815-5	巻上軸ビス（左ねじ） ⊖ PM 2 x 3 Film-advance shaft screw (left-handed)	1		3 4,4-1	○	S-0206A
815A-5	巻上軸ビス Film-advance shaft screw	1		3-1	○	
817	小ねじ JCIS ⊕ PM 2.0 x 5.0 Type (3) Screw	2		9 9-1	○	
820	カップリングビス Coupling screw	1		4 4-1	○	32FB1 #932
821	小ねじ JCIS ⊕ PM 2.0 x 4.0 Type (3) Screw	2		14 14-1	○	
823A	ミラーレバー軸調整用座金 Washer	1	B-5 B15-6	11-1	○△	

部品表 Parts List

P33FB-R·3012·A

部品番号 Part No.	名称 Name	1台個数 Pcs. per Unit	部組品No. Sub-assembly No.	参照図番 Reference Fig. No.	販売区分 Term of Sale	備考 Remarks
823B	ミラーレバー軸調整用座金 Washer	1	B-5 B15-6	11-1	○△	
823C	ミラーレバー軸調整用座金 Washer	1	B-5 B15-6	11-1	○△	
823D	ミラーレバー軸調整用座金 Washer	1	B-5 B15-6	11-1	○△	
824	ギアセットビス Gear set screw	7	A7	4,4-1	○△	32FB #824
825-5	小ねじ JCIS ⊕ PM 2.0 x 2.5 Type (1) Screw	6	B-1 B-5	4,4-1 10,10-1 14,14-1	○△	
825A	小ねじ JCIS ⊕ PM 2.0 x 2.5 Type (3) Screw	1		14-1	○	
830	小ねじ JCIS ⊕ PM 1.4 x 2.0 Type (3) Screw	2		9 9-1	○	
831	小ねじ JCIS ⊕ CM 1.4 x 4 Type (1) Screw	1	K	2	○△	
831-6	スイッチ制限Gリング Switch stopper G-ring	1	K-6	2-1	○△	
832	巻上レバービス（タップタイトネジ） ⊕ PM 2 x 4.5 Screw	2	P3-1	1 1-1	○△	
833-1	ゆるみ止めビス Set screw	1		4 4-1	○	
835	下地板ビスB ⊕ PM 2.0 x 3.5 Screw	3		3 3-1	○	
840	小ねじ JCIS ⊕ CM 2.0 x 3.0 Type (3) Screw	2		13 13-1	○	32FB #840
841	レリーズ軸用Eリング Release shaft E-ring	1		13 13-1	○	31F3B #836

部品番号 Part No.	名称 Name	1台個数 Pcs. per Unit	部組品No. Sub-assembly No.	参照図番 Reference Fig. No.	販売区分 Term of Sale	備考 Remarks
842A	調整座金（2.1×3.8×0.05） Washer		B-1 B-5	9 9-1	○△	
842B	調整座金（2.1×3.8×0.06） Washer		B-1 B-5	9 9-1	○△	
842C	調整座金（2.1×3.8×0.07） Washer		B-1 B-5	9 9-1	○△	
842D	調整座金（2.1×3.8×0.08） Washer		B-1 B-5	9 9-1	○△	
842E	調整座金（2.1×3.8×0.09） Washer		B-1 B-5	9 9-1	○△	
842F	調整座金（2.1×3.8×0.1） Washer		B-1 B-5	9 9-1	○△	
842G	調整座金（2.1×3.8×0.11） Washer		B-1 B-5	9 9-1	○△	
842H	調整座金（2.1×3.8×0.12） Washer		B-1 B-5	9 9-1	○△	
842I	調整座金（2.1×3.8×0.2） Washer		B-1 B-5	9 9-1	○△	
842J	調整座金（2.1×3.8×0.3） Washer		B-1 B-5	9 9-1	○△	
842K-5	調整座金（2.1×3.8×0.4） Washer		B-5	9-1	○△	
842M	調整座金（2.1×3.8×0.5） Washer		B-1 B-5	10 10-1	○△	
842N	調整座金（2.1×3.8×0.6） Washer		B-1 B-5	9 9-1	○△	
842P	調整座金（2.1×3.8×0.7） Washer		B-1 B-5	9 9-1	○△	

部品表 Parts List

P33FB-R-3012-A

部品番号 Part No.	名称 Name	1台個数 Pcs. per Unit	部組品No. Sub-assembly No.	参照図番 Reference Fig. No.	販売区分 Term of Sale	備考 Remarks
842Q	調整座金（2.1 × 3.8 × 0.8） Washer		B-1 B-5	9 9-1	○△	
842R	調整座金（2.1 × 3.8 × 0.9） Washer		B-1 B-5	9 9-1	○△	
842S	調整座金（2.1 × 3.8 × 1.0） Washer		B-1 B-5	9 9-1	○△	
842T	調整座金（2.1 × 3.8 × 1.1） Washer		B-1 B-5	9 9-1	○△	
842U	調整座金（2.1 × 3.8 × 1.2） Washer		B-1 B-5	9 9-1	○△	
842V	調整座金（2.1 × 3.8 × 0.0 3） Washer		B-1 B-5	9 9-1	○△	
843-5	スプロケットばね受座金 Washer	2		4 4-1	○	32FB #843
844-5	小ねじ JCIS ⊕ CM 2.0 x 5.0 Type (3) Screw	1	K-6	2-1	○△	
845-5	小ねじ JCIS ⊕ CM 2.0 x 3.0 Type (1) Screw	5		14,14-1	○	
845A-5	小ねじ JCIS ⊕ PM 1.7 x 3.0 Type (1) Screw	1		2-1	○	
848	吊環ビス Eyelet set screw	2		13	○	32FB #848
848-1	スプリングピン（1.6 × 7） Spring pin	2		13-1	○	
850-1	エアーダンパーピストンピン Air damper piston pin	1	B-1 B20	10	○△	
855A	小ねじ JCIS ⊕ CM 2.0 x 4.5 Type (3) Screw	2		13 13-1	○	

部品番号 Part No.	名称 Name	1台個数 Pcs. per Unit	部組品No. Sub-assembly No.	参照図番 Reference Fig. No.	販売区分 Term of Sale	備考 Remarks
863-5	M. BOX下基板ビス Screw	3	B-5	12-1	○△	
857-5	大レバー座金 Washer	1		13 13-1	○	
871	振り子偏心軸ビス Eccentric screw	1		14 14-1	○	
875	止めねじUS 1.4 × 2.5 Set screw	2	N1	9 9-1	○△	
879	レリーズレバーガイド軸 Release lever guide pin	1		13 13-1	○	
882	小ねじ JCIS ⊕ CM 1.7 x 3.0 Type (1) Screw	2		16-1	○	32FB #882
883	Rボタン用Eリング Rewind button E-ring	1	D-1	14 14-1	○△	32FB #883
887	スプロケット左ねじ Sprocket screw (left handed)	1		4 4-1	○	
888	スプロストッパービス Sprocket stopper screw	1	A11 A11-6	3 3-1	○△	
889	三角環 Neck-strap ring	2		13 13-1	○	S-8219
890-1	三角環保護カバー Neck-strap ring cover	2		13 13-1	○	
893	絞り連動片バネビス Aperture coupling piece screw	2	B-1 B4	8	○△	32FB1 #893 (~8)
897A	巻上ギアワッシャー Washer (6.5 x 9.5 x 0.05)	1		3 3-1	○	
897B	巻上ギアワッシャー Washer (6.5 x 9.5 x 0.1)	1		3 3-1	○	

部品表 Parts List

P33FB-R-3012-A

部品番号 Part No.	名称 Name	1台個数 Pcs. per Unit	部組品No. Sub-assembly No.	参照図番 Reference Fig. No.	販売区分 Term of Sale	備考 Remarks
897C	巻上ギアワッシャー（6.5×9.5×0.2） Washer	1		3 3-1	○	
897D	巻上ギアワッシャー（6.5×9.5×0.3） Washer	1		3-1	○	
897E	巻上ギアワッシャー（6.5×9.5×0.25） Washer	1		3-1	○	
897F	巻上ギアワッシャー（6.5×9.5×0.15） Washer	1		3-1	○	
906-2	MD巻上スイッチA MD take-up switch A	1	A5-2		△	
907-2	MD巻上スイッチB MD take-up switch B	1	A5-2		△	
910	MD軸受 MD shaft bearing	1		14 14-1	○	
911	MD軸 MD shaft	1		14 14-1	○	
912	MDシーソーレバー MD see-saw lever	1		14 14-1	○	
913	レリーズ連結ねじ Release shaft connecting screw	1		13 13-1	○	
914	MDシーソーレバー軸 See-saw lever axle	1		14 14-1	○	
915	小ねじ JCIS ⊕ CM 2.0 x 4.5 Type (1) Screw	1		14-1	○	
916-1	MD外部接点受け MD electrical contact socket	1	A17-1		△	
919-1	外部接点ラグ板 MD external contact lug	4	A17-1		△	

部品表 Parts List

P33FB-R-3012-A

部品番号 Part No.	名称 Name	1台個数 Pcs. per Unit	部組品No. Sub-assembly No.	参照図番 Reference Fig. No.	販売区分 Term of Sale	備考 Remarks
922	カップリング飾り環 Coupling cover ring	1	D1		Δ	
923	モーターカップリング Motor coupling	1		4 4-1	○	
924-1	絶縁シート Insulating seat	1	A17-1	14 14-1	Δ	
950	MDアースコード MD Earth code (Blue x 20mm)	1			○	

部品表 Parts List

P33FB-R-3012-A

部品番号 Part No.	名称 Name	1台個数 Pcs. per Unit	部組品No. Sub-assembly No.	参照図番 Reference Fig. No.	販売区分 Term of Sale	備考 Remarks
G1	ミラー Mirror	1	B-1 B-5 B26 B26-5	11 11-1	○△	
G3	プリズム Prism	1		9 9-1	○	
G6	反射ミラー Aperture readout reflex mirror	2	N1	9 9-1	○△	
G7	接眼ガラス Eyepiece glass	1	C		△	

部組品一覧表 Subassembly list

P33FB-R-3012-A

部組品番号 No. of Sub-assembly	名称 Name	1台個数 Pcs. per Unit	構成部品番号 No. of Constituent Parts	参照図番 Reference Fig. No.	備考 Remarks
A2	耳環 Eyelet	2	11, 12	13	
A2-1	耳環 Eyelet	2	11-1, 12	13-1	
A4	シャッターチャージレバー Shutter charge lever	1	24, 32, 33, 35, 37-1, 38x2	4	
A4A(03)	シャッターチャージレバー Shutter charge lever	1	24, 32, 33, 35, 37-1, 38x2	4	特寸 −0.15
A4A(04)	シャッターチャージレバー Shutter charge lever	1	24, 32, 33, 35, 37-1, 38x2	4	特寸 +0.15
A4-1	シャッターチャージレバー Shutter charge lever	1	32-1, 24, 33-1, 35, 37-1, 38-1	4-1	
A5-2	電池ケース Battery chamber	1	43-2, 47, 48, 49, 906-2 907-2	13 13-1	
A6(03)(04)	チャージレバー Charge lever	1	22, 23-5, 24	13	
A6-5	チャージレバー Charge lever	1	21-5, 22, 23-5, 24	13-1	
A7-1	スプール上ギア Spool upper gear	1	420-1, 421, 424-1, 456-1 456A, 456B-1, 497x16 824x3	4 4-1	
A8	スプール Spool	1	528, 455, 455A	4 4-1	
A9	スプール軸 Spool shaft	1	453, 456C, 529	4 4-1	
A10A-1	セットカムA Set cam A	1	459-1, 458, 461, 530A	4	
A10B-2	セットカムB Set cam B	1	459-1, 458, 461, 530B-1	4-1	

部組品一覧表 Subassembly list

P33FB-R-3012-A

部組品番号 No. of Sub-assembly	名称 Name	1台個数 Pcs. per Unit	構成部品番号 No. of Constituent Parts	参照図番 Reference Fig. No.	備考 Remarks
A11	下地板 Lower base plate	1	416-1, 417-2, 418, 419 422, 423, 425, 426x3, 427 440, 443, 444, 445, 446A-5 448, 450, 452, 457, 516-1 517, 534, 540Ax2, 819x2 A12	3	
A11-6	下地板 Lower base plate	1	452-6, 416-1, 417-6, 418 419, 422-6, 423, 425 426x3, 427, 440, 443, 444 445, 446A-5, 448, 450, 457 496-6, 497x24, 888 A12-6	3-1	
A12	スプロストッパー Sprocket stopper	1	447, 449	3	
A12-6	スプロストッパー Sprocket stopper	1	447-6, 449	3-1	
A13-6	面カム Clutch cam	1	414-6, 414A-5	3-1	
A14	スプール軸受ケース Spool shaft bearing cause	1	454, 423, 457, 497x8	4 4-1	
A17-1	MD外部接点 MD electrical contact	1	916-1, 919-1x4, 924-1	14 14-1	
A18	巻上ギア Wind-up gear		412x3, 412Bx6, 414x3, 415	3	
B1(01)(02)	セルフレバー Self-timer lever	1	16, 16A	9 9-1	
B10	絞りレバー Diaphragm actuating lever	1	315, 312, 316	11 11-1	
B11-6	大レバー Mirror charge lever	1	333-6, 335-5	12-1	
B13-6	ミラーダウンレバー Mirror-down lever	1	323-6, 325-1, 350-5, 358-6 372	11-1	
B11	大レバー Mirror charge lever	1	333-1, 335, 369	12	

部組品一覧表 Subassembly list

P33FB-R-3012-A

部組品番号 No. of Sub-assembly	名称 Name	1台個数 Pcs. per Unit	構成部品番号 No. of Constituent Parts	参照図番 Reference Fig. No.	備考 Remarks
B14	ミラーダウン信号レバー Mirror-down signal lever	1	288-1, 289-1	11	
B20	エアダンパー Air damper	1	385-1, 386-2, 387, 388, 392 393-3, 397, 397-1, 850-1,856	10	
B20-1	エアダンパー Air damper	1	388, 386-3, 387, 392, 393-3, 397-1	10-1	
B33-2	絞りレバーばね掛け Diaphragm spring stub	1	376-1, 324-1	11-1	
B27-6	手動絞りレバー Manual stop-down lever	1	310-1, 311-6	11-1	
B38-5	ミラーボックス後部遮光板 Mirror box rear light-tight plate	1	86-5, 83-5	10 10-1	
C4	接眼窓 Eyepiece ring	1	8-1, 8A, 9, G7	1 1-1	
C7	接点モールド Contact mold	1	71-1, 70-1	1 1-1	
D-1(01)	底蓋 Bottom plate	1	4, 439, 540, 883, 922 A4	14 14-1	
D-1(02)	底蓋 Bottom plate	1	4, 439, 540, 883, 922	14 14-1	
E1	裏蓋 Camera back	1	701-1, 705x4, 707, 710 711x2, 712x3, 715, 716 717x2, 718, 719, 720 721x7, 722, 723-1, 725 726, 727, 728, 730x2, 731 732	15-1	
E2	圧板 Pressure plate	1	702-2, 703, 704-2x2	15-1	
K5	送り爪レバー Advance lever	1	510-1, 511-1, 513-1, 515-1	2	

部組品一覧表 Subassembly list

P33FB-R-3012-A

部組品番号 No. of Sub-assembly	名称 Name	1台個数 Pcs. per Unit	構成部品番号 No. of Constituent Parts	参照図番 Reference Fig. No.	備考 Remarks
K6	零戻しレバー Counter release lever	1	522, 524	2	
P5	電池キャップ Battery chamber cap	1	44, 46	14 14-1	

iscamera

部品表 Parts List

33FB-R-3012-A

部品番号 Part No.	名称 Name	1台個数 Pcs. per Unit	部組品No. Sub-assembly No.	参照図番 Reference Fig. No.	販売区分 Term of Sale	備考 Remarks
212-5	着脱ピン Lens release pin	1	B-1 B5-5		Δ	
213-5	着脱レバー Lens release lever	1	B-1 B5-5		Δ	
214-5	着脱レバー受 Lens release lever coupling	1	B-1 B6-1		Δ	
214A-5	着脱レバー押えばね Lens release lever spring	1	B-1 B6-1		Δ	
215-5	着脱ボタン軸 Lens release button shaft	1	B-1 B6-1		Δ	
217-5	着脱ボタン Lens release button	1	B-1 B6-1	10	○Δ	
291-5	係止レバー軸 Latch lever axle	1	B-1	11	○Δ	
291A-5	係止レバー調整座金（3×5×0.05） Washer	1	B-1	11	○Δ	
291B-5	供止レバー調整座金（3×5×0.08） Washer	1	B-1	11	○Δ	
326-5	ミラーレバー軸 Mirror lever axle	1	B-1 B17-5		Δ	
331-5	ミラーアップ押えレバー軸 Mirror-up lever axle	1	B-1	11	○Δ	
339-5	45°ストッパーバネ（d＝0.32） 45° stopper spring	1	B-1 B16-5		Δ	
357-5	シグナルレバー止めビス Signal lever screw	1	B-1	11	○Δ	
819-5	小ねじ JCIS ⊕ PM 1.4 x 3 Type (3) Screw	1	B-1	8	○Δ	

部品表 Parts List

33FB-R-3012-A

部品番号 Part No.	名称 Name	1台個数 Pcs. per Unit	部組品No. Sub-assembly No.	参照図番 Reference Fig. No.	販売区分 Term of Sale	備考 Remarks
856	Eリング E-ring	1	B-1 B20	10	○△	
858-5	座金 Washer	1	B-1	11	○△	
878A-5	ダウン係止レバーストッパー Down-stopper lever stopper	1	B-1	11	○△	
878B-5	ダウン係止レバーストッパー Down-stopper lever stopper	1	B-1	11	○△	

部組品一覧表 Subassembly list

部組品番号 No. of Sub-assembly	名称 Name	1台個数 Pcs. per Unit	構成部品番号 No. of Constituent Parts	参照図番 Reference Fig. No.	備考 Remarks
B5-5	着脱レバー Lens release lever	1	213-5, 212-5	8	
B17-5	ミラーレバー軸取付板 Mirror lever base plate	1	377, 326-5	11	

Section III. Explosion Drawing

Content

Note: 1) Parts in the explosion drawings are shown in the facing page as 35FB parts or as P33FB parts.
2) Be sure to fill the part order form, respectively for 35FB parts and for P33FB parts.
3) Parts in the Part List of this section are avaliable as indiviaul parts or as assembly.

How to use explosion drawings:

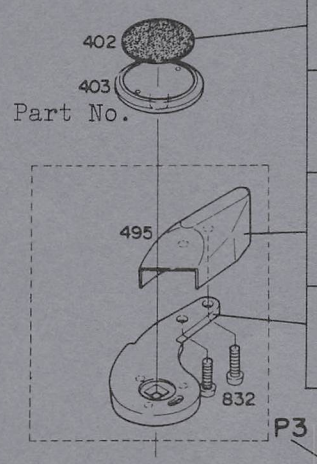

Part Classification	Term of Supply	Mark
Part with Part No., shown outside the broken line	Available as individual part	○
Part without Part No, shown outside the broken line	Not available as repair part	×
Part with Part No., shown inside the broken line	Available as assembly or individually	○△
Part without Part No, shown inside the broken line	Available only as assembly	△

Assembly No.(component parts shown inside the broken line)

上カバー　Top Cover

35FB-R.3012.A

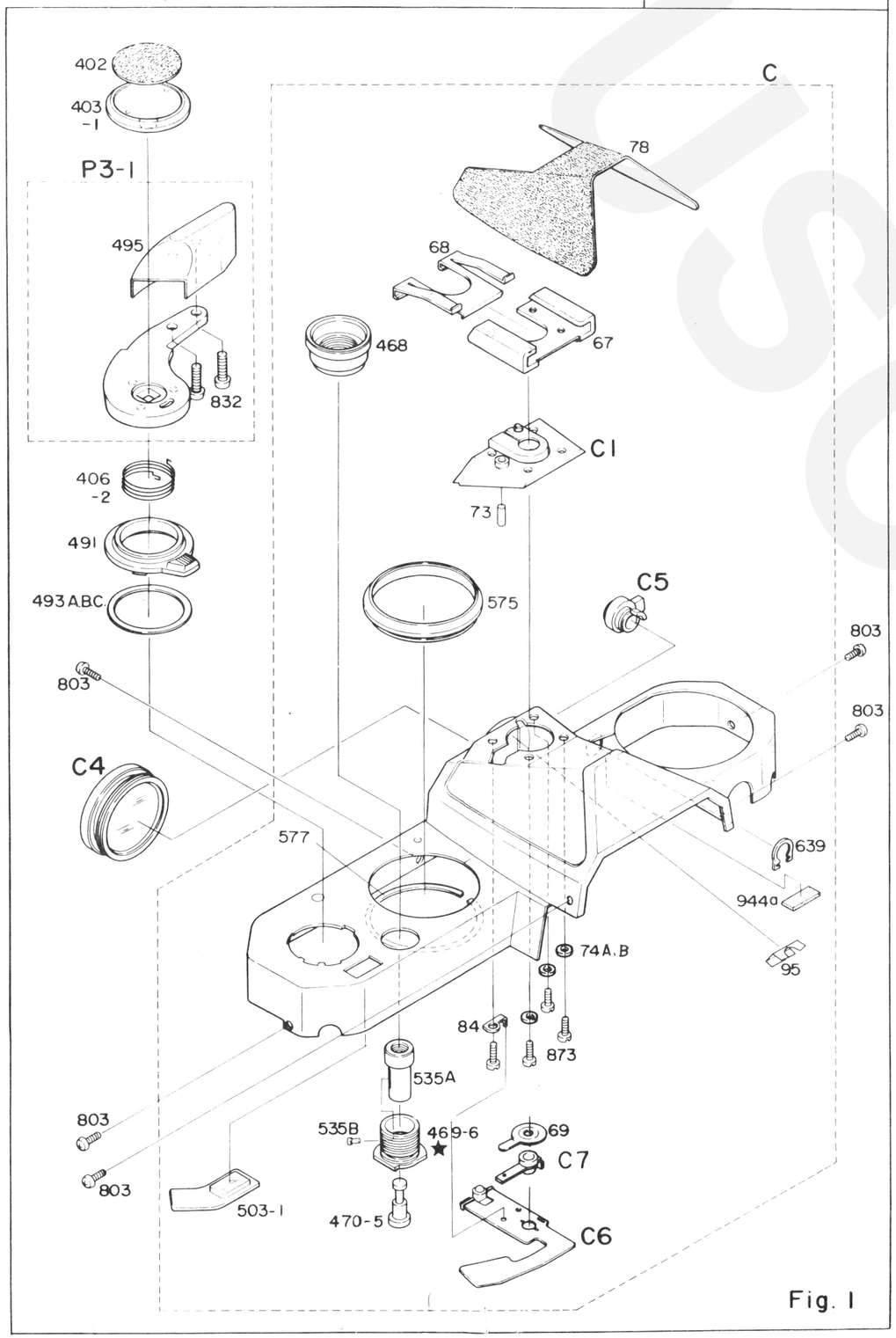

Fig. 1

上カバー　Top Cover

35FB-R.3012.A

NEW

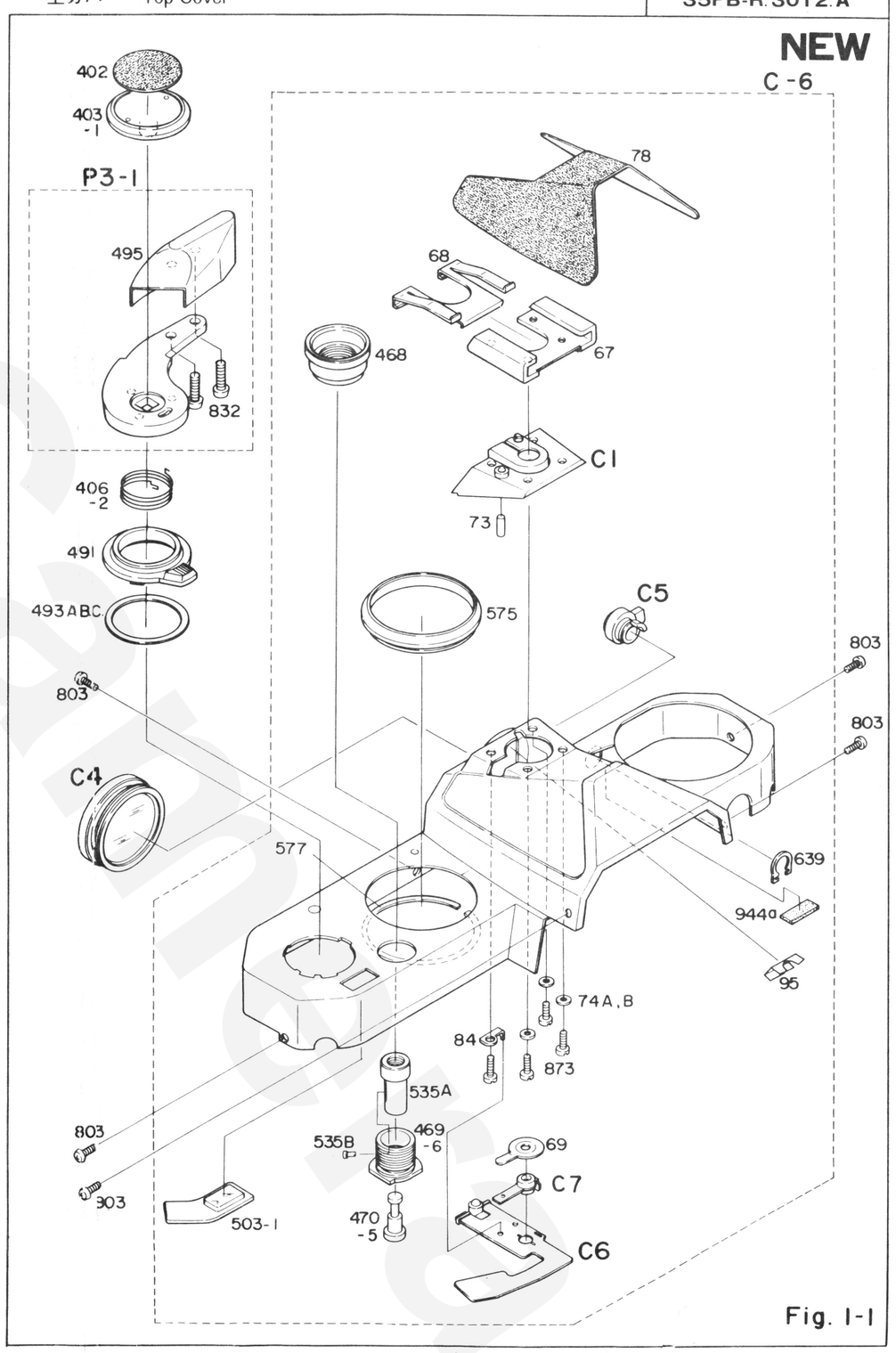

Fig. 1-1

★印は，NEWボデーへの機構改造により，従来のボデー専用となった部品を示す。
Marks (★) show the parts used exclusively in the old type.

35FB-R-3012-A

部品番号 Part No.	名称 Name	備考 Remarks	部品番号 Part No.	名称 Name	備考 Remarks
35FB 67	Hシュー Hot shoe contact		C1	シュー座モールド Hot-shoe mould	
68 (01) (02)	シューバネ Shoe contact		C5	チェッカーレバー Checker lever	
78	ペンタ革 Penta cover leatherette		C6	レディライトプリント板 Ready-light printed circuit	
84	アースラグ板 Earth lug plate		P3-1 (01)(02)	巻上レバー Wind-up lever	
95	LED遮光板 LED light baffle				
406-2	レバー戻しばね Film-advance lever retaining spring		**P33FB**		
468	レリーズ釦飾り環 Release button ring		P33FB 69	押え接点 Upper shoe switch contact	
★ 469	かぶせレリーズ環 Release ring		73	押棒 Switch plunger	
470-5	レリーズ内筒 Release inner tube		74 A, B	シュー座金 Shoe washer	
491	多重撮りツマミ Multi-exposure knob		402	巻上レバー用皮 Wind-up lever leatherette	
493 A,B,C	多重撮りシート Multi-exposure sheet A		403-1 (01)(02)	レバー押えねじ Wind-up lever screw	
503-1	枚数計窓 Frame-counter window		469-6	かぶせレリーズ環 Release ring	
575 (01)(02)	飾り環 Cover ring		495	指当て Wind-up lever knob	
577	飾り環座金 Cover ring washer		535A	レリーズ釦 Release button	
639	止め輪 Snap ring		535B	レリーズガイドビス Release guide screw	
873	小ねじ JCIS ⊕ PM 1.7x3.5 Type (3) Screw		803 (01)(02)	小ねじ JCIS ⊕ PM 1.7x3.0 Type (1) Screw	
944A	グンカン貼付ゴム Rubber		832	巻上レバービス Screw	
C	上蓋部 Top cover		C4	接眼窓 Eyepiece ring	
C-6	上蓋部 Top cover		C7	接点モールド Contact mold	

上地板 Upper Base Plate

35FB-R.3012.A

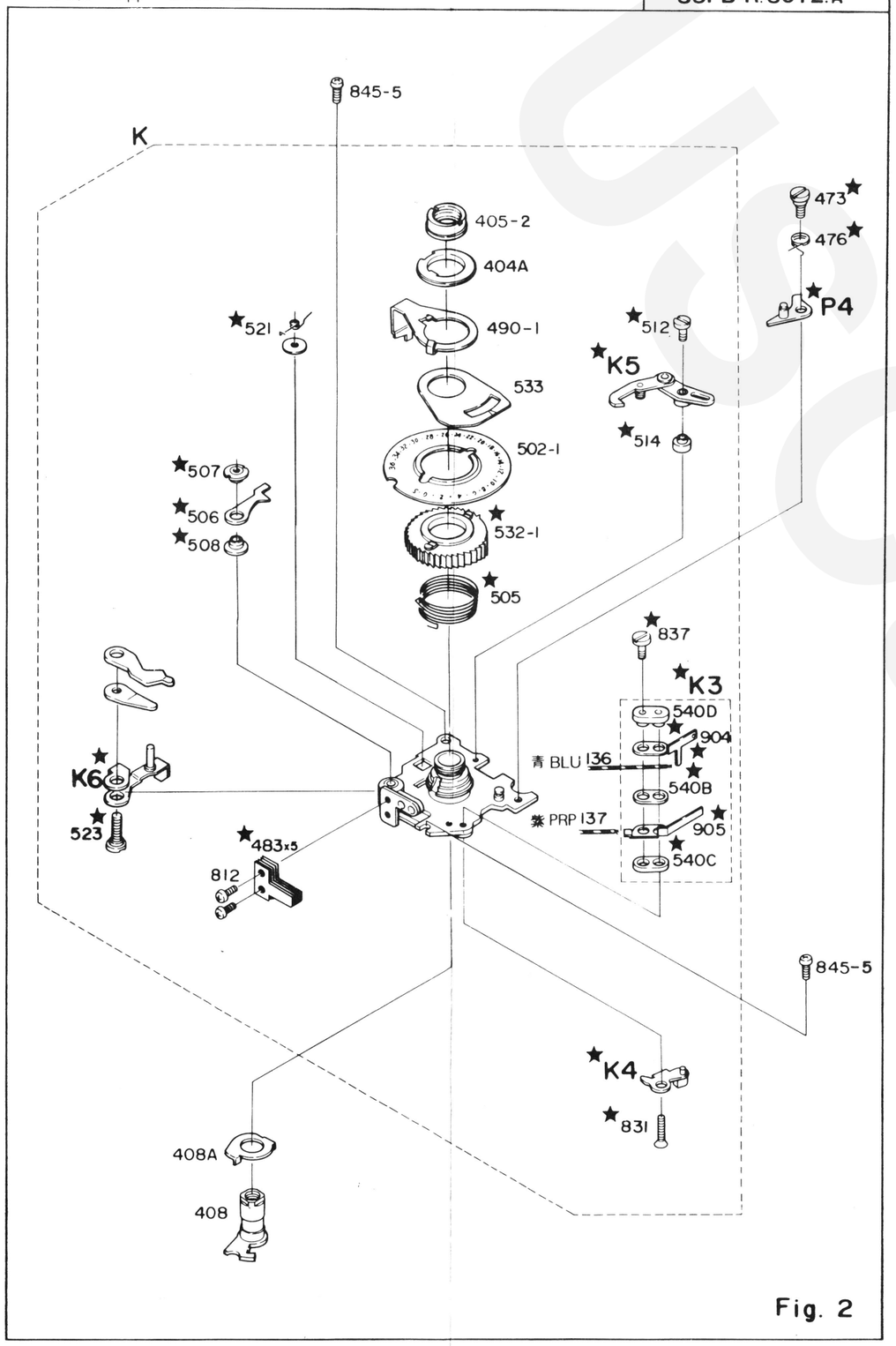

Fig. 2

上地板 Upper Base Plate

35FB-R.3012.A

NEW

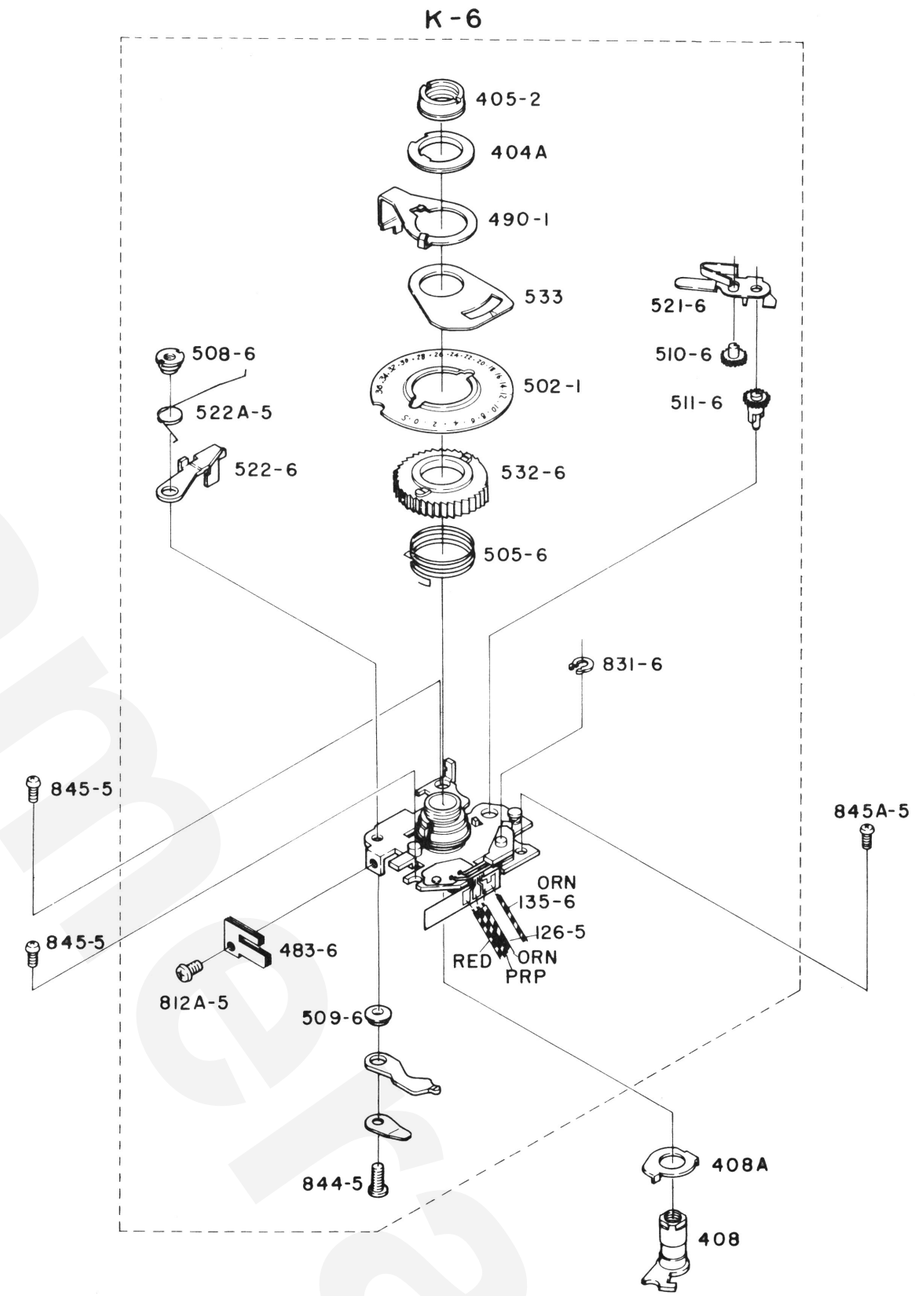

Fig.2-1

★印は，NEWボデーへの機構改造により，従来のボデー専用となった部品を示す。
Marks (★) show the parts used exclusively in the old type.

35FB-R-3012-A

部品番号 Part No.	名称 Name	備考 Remarks	部品番号 Part No.	名称 Name	備考 Remarks
35FB 67	Hシュー Hot shoe contact		C1	シュー座モールド Hot-shoe mould	
68 (01) (02)	シューバネ Shoe contact		C5	チェッカーレバー Checker lever	
78	ペンタ革 Penta cover leatherette		C6	レディライトプリント板 Ready-light printed circuit	
84	アースラグ板 Earth lug plate		P3-1 (01)(02)	巻上レバー Wind-up lever	
95	LED遮光板 LED light baffle				
406-2	レバー戻しばね Film-advance lever retaining spring		**P33FB**		
468	レリーズ釦飾り環 Release button ring		P33FB 69	押え接点 Upper shoe switch contact	
★ 469	かぶせレリーズ環 Release ring		73	押棒 Switch plunger	
470-5	レリーズ内筒 Release inner tube		74 A, B	シュー座金 Shoe washer	
491	多重撮りツマミ Multi-exposure knob		402	巻上レバー用皮 Wind-up lever leatherette	
493 A,B,C	多重撮りシート Multi-exposure sheet A		403-1 (01)(02)	レバー押えねじ Wind-up lever screw	
503-1	枚数計窓 Frame-counter window		469-6	かぶせレリーズ環 Release ring	
575 (01)(02)	飾り環 Cover ring		495	指当て Wind-up lever knob	
577	飾り環座金 Cover ring washer		535A	レリーズ釦 Release button	
639	止め輪 Snap ring		535B	レリーズガイドビス Release guide screw	
873	小ねじ JCIS ⊕ PM 1.7x3.5 Type (3) Screw		803 (01)(02)	小ねじ JCIS ⊕ PM 1.7x3.0 Type (1) Screw	
944A	グンカン貼付ゴム Rubber		832	巻上レバービス Screw	
C	上蓋部 Top cover		C4	接眼窓 Eyepiece ring	
C-6	上蓋部 Top cover		C7	接点モールド Contact mold	

上地板 Upper Base Plate

35FB-R.3012.A

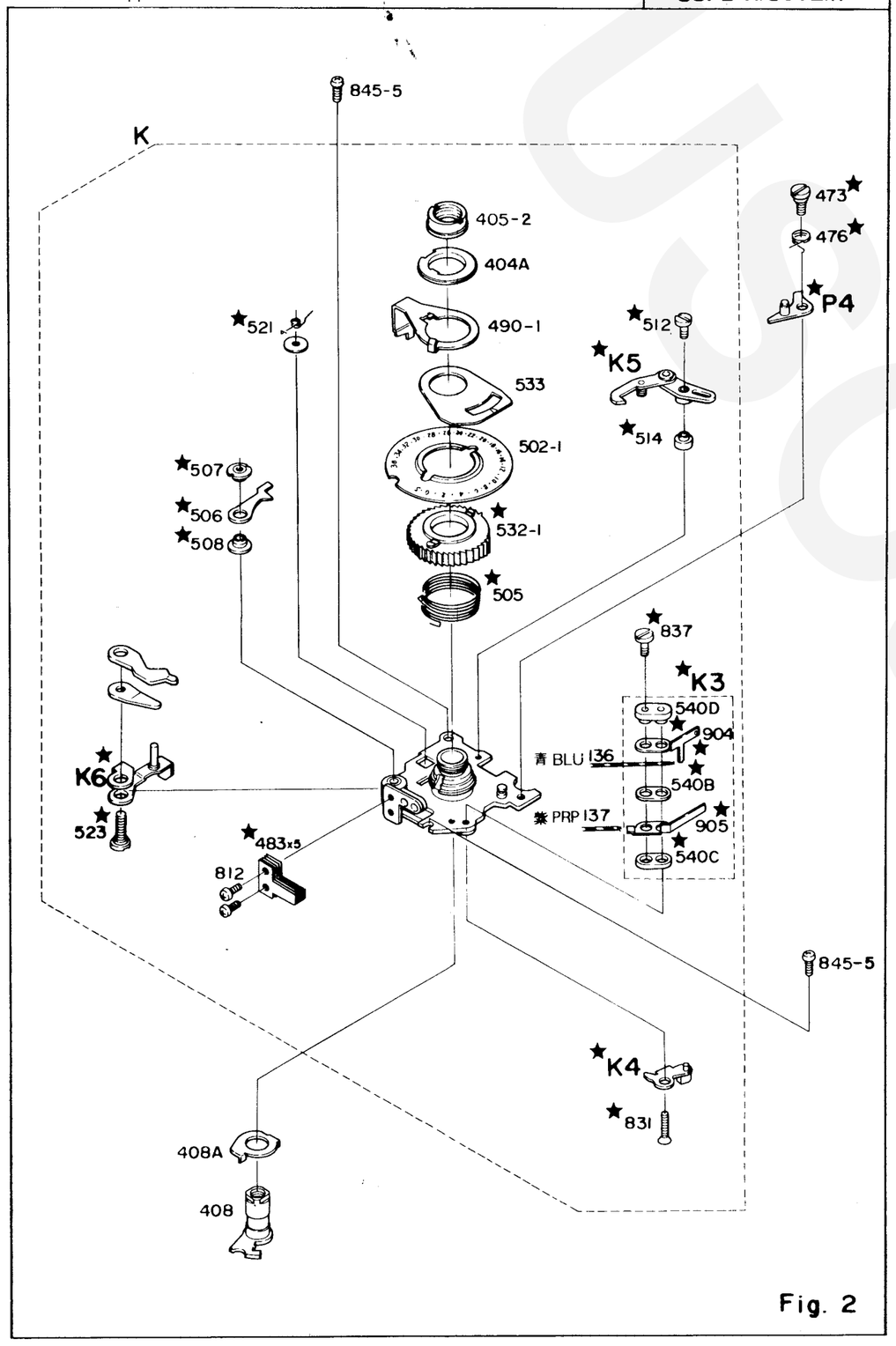

Fig. 2

上地板 Upper Base Plate

35FB-R.3012.A

NEW

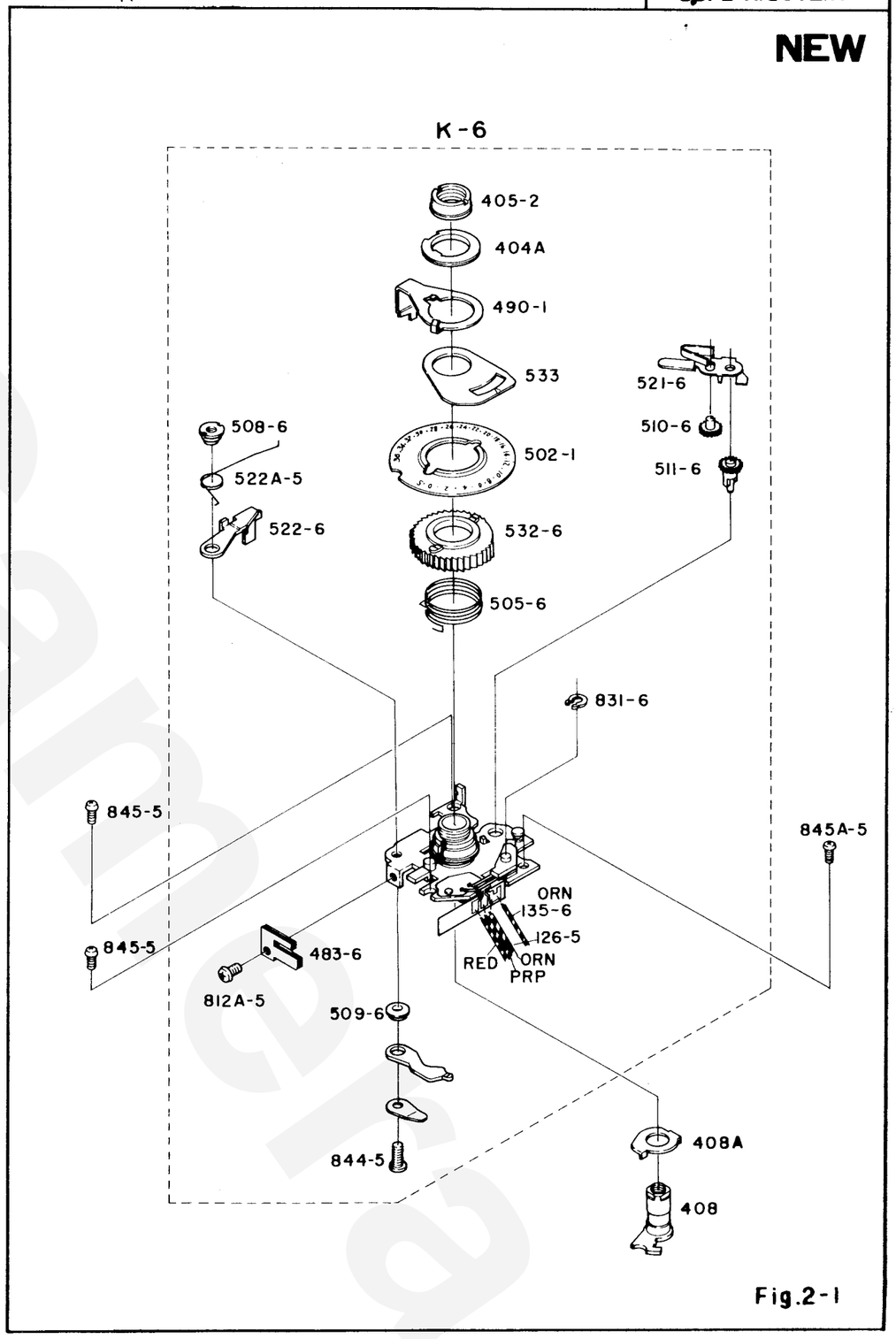

Fig.2-1

上カバー　Top Cover

35FB-R.3012.A

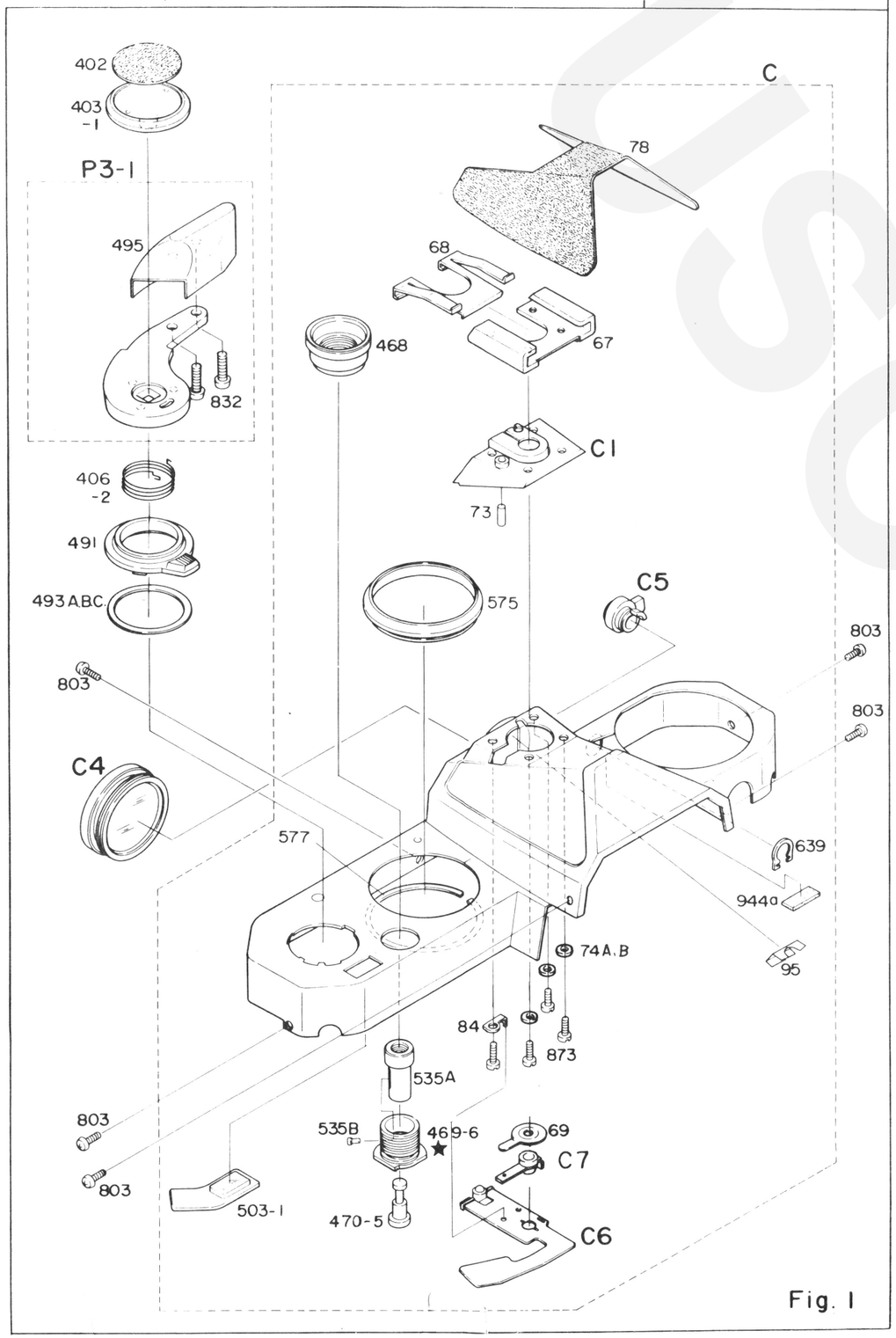

Fig. 1

上カバー　Top Cover

35FB-R.3012.A

NEW

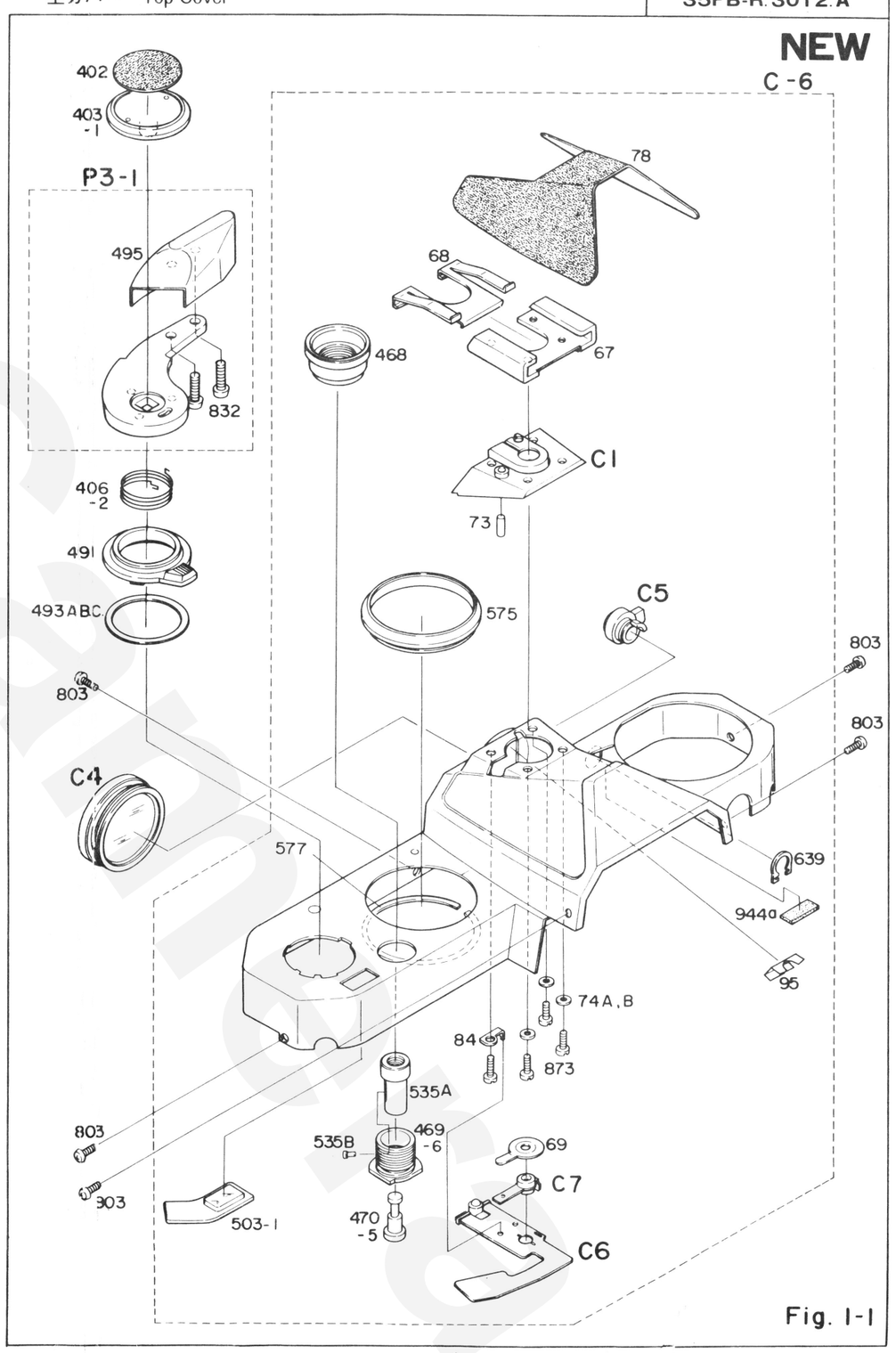

Fig. 1-1

★印は，NEWボデーへの機構改造により，従来のボデー専用となった部品を示す。
Marks (★) show the parts used exclusively in the old type.

35FB-R-3012-A

部品番号 Part No.	名称 Name	備考 Remarks	部品番号 Part No.	名称 Name	備考 Remarks
35FB 67	Hシュー Hot shoe contact		C1	シュー座モールド Hot-shoe mould	
68 (01) (02)	シューバネ Shoe contact		C5	チェッカーレバー Checker lever	
78	ペンタ革 Penta cover leatherette		C6	レディライトプリント板 Ready-light printed circuit	
84	アースラグ板 Earth lug plate		P3-1 (01)(02)	巻上レバー Wind-up lever	
95	LED遮光板 LED light baffle				
406-2	レバー戻しばね Film-advance lever retaining spring		**P33FB**		
468	レリーズ釦飾り環 Release button ring		P33FB 69	押え接点 Upper shoe switch contact	
★ 469	かぶせレリーズ環 Release ring		73	押棒 Switch plunger	
470-5	レリーズ内筒 Release inner tube		74 A, B	シュー座金 Shoe washer	
491	多重撮りツマミ Multi-exposure knob		402	巻上レバー用皮 Wind-up lever leatherette	
493 A,B,C	多重撮りシート Multi-exposure sheet A		403-1 (01)(02)	レバー押えねじ Wind-up lever screw	
503-1	枚数計窓 Frame-counter window		469-6	かぶせレリーズ環 Release ring	
575 (01)(02)	飾り環 Cover ring		495	指当て Wind-up lever knob	
577	飾り環座金 Cover ring washer		535A	レリーズ釦 Release button	
639	止め輪 Snap ring		535B	レリーズガイドビス Release guide screw	
873	小ねじ JCIS ⊕ PM 1.7x3.5 Type (3) Screw		803 (01)(02)	小ねじ JCIS ⊕ PM 1.7x3.0 Type (1) Screw	
944A	グンカン貼付ゴム Rubber		832	巻上レバービス Screw	
C	上蓋部 Top cover		C4	接眼窓 Eyepiece ring	
C-6	上蓋部 Top cover		C7	接点モールド Contact mold	

上地板 Upper Base Plate

35FB-R.3012.A

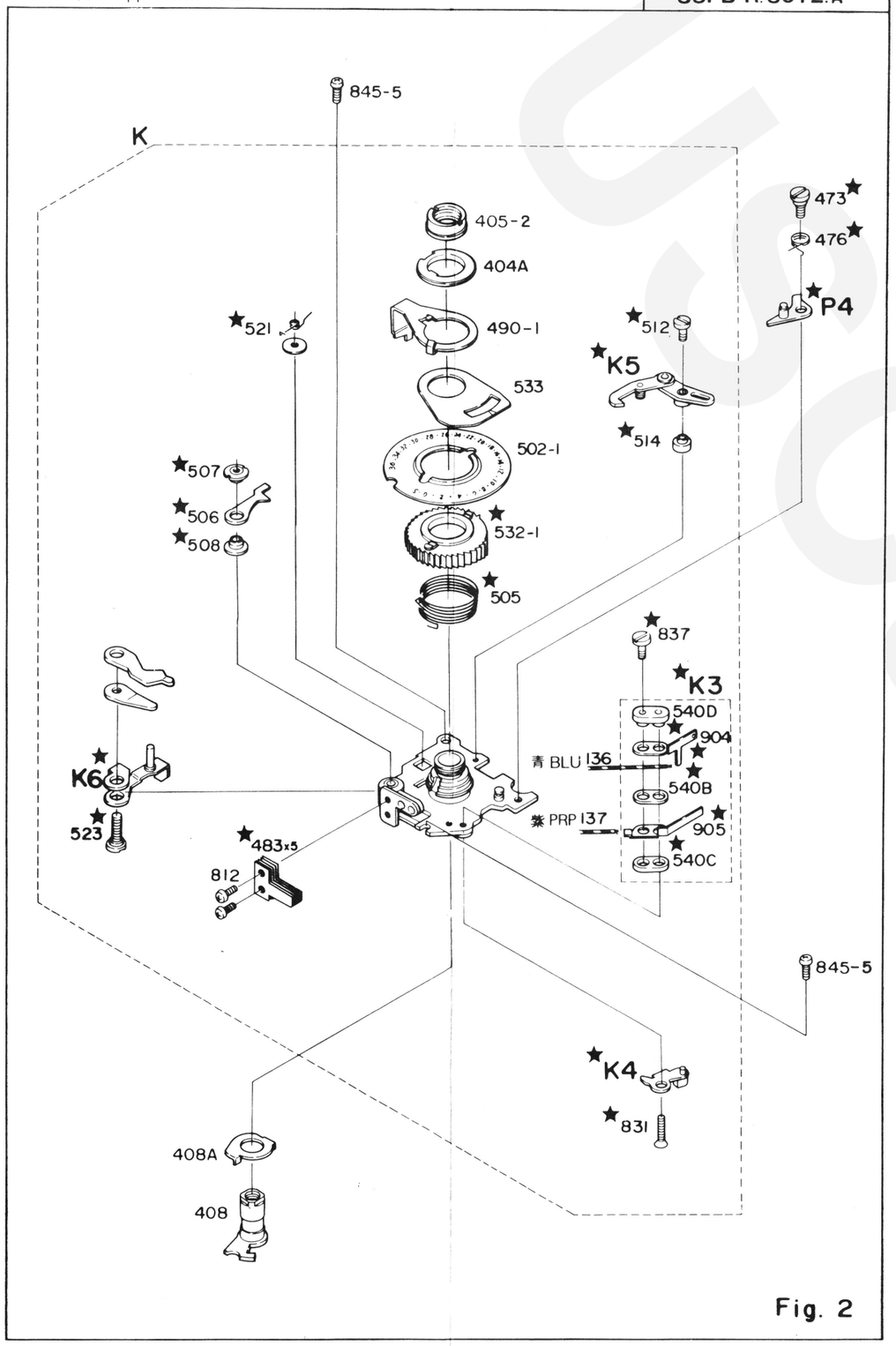

Fig. 2

上地板 Upper Base Plate

35FB-R.3012.A

NEW

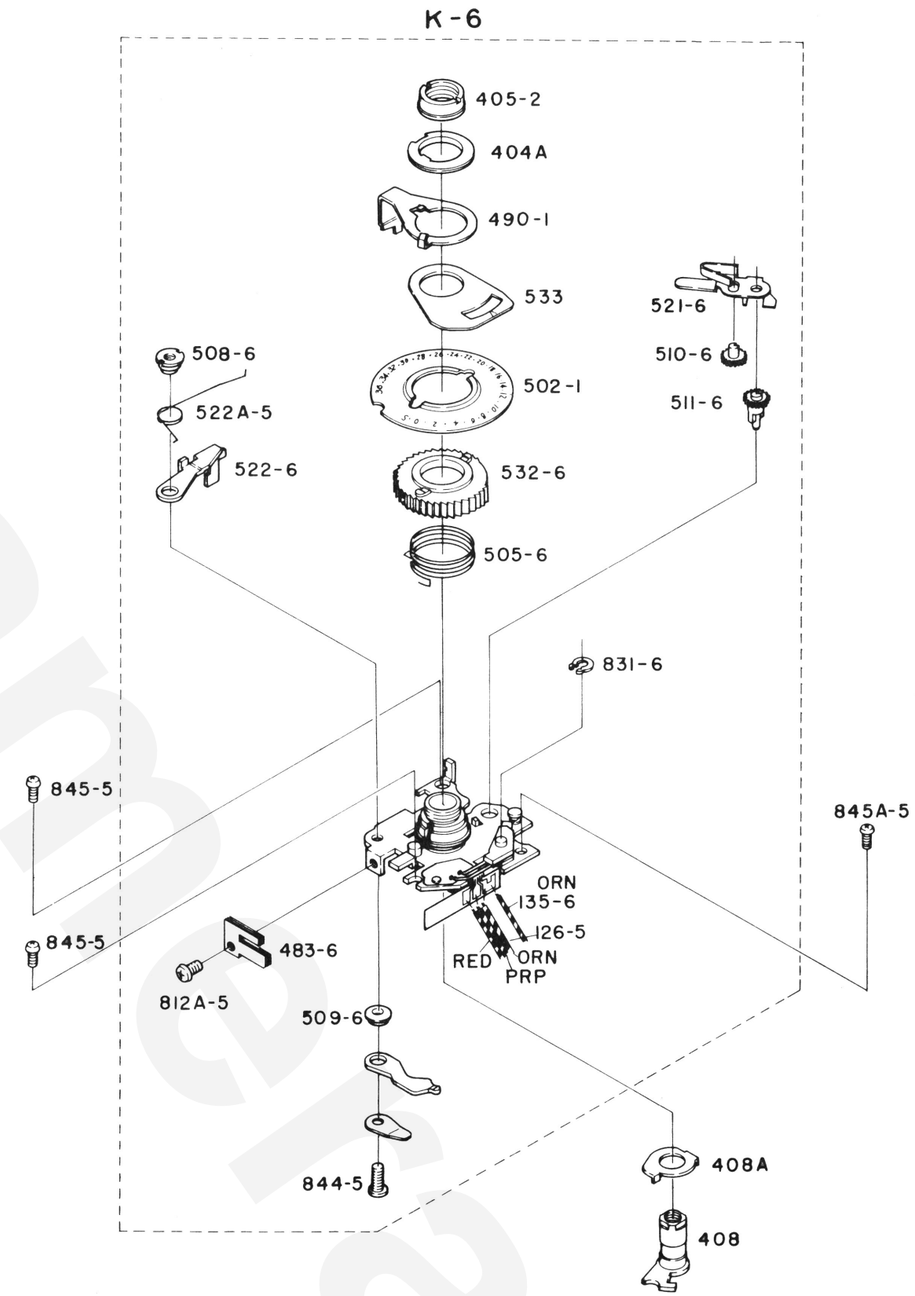

Fig.2-1

部品番号 Part No.	名称 Name	備考 Remarks
35FB 135-6	マグネットプラスコード Lead wire, magnet	
136	MDスイッチコード Lead wire, MD switch	
137	後幕シグナルコードA Lead wire A	
404A	枚数計押え板 Counter retaining ring	
★476	スイッチ制限バネ Switch stopper spring	
490	多重撮り連結レバー Multi-exposure lever	
490-1	多重撮り連結レバー Multi-exposure lever	
★540B C,D	MDスイッチ絶縁板 MD-switch insulation plate	
★837	取付ビス Screw	
★904	MDスイッチ接片A MD switch contact A	
★905	MDスイッチ接片B MD switch contact B	
K	上地板 Upper base plate	
★K3	MDスイッチ MD switch	
★K4	スイッチレバー Lever switch	
★P4	スイッチ制限 Switch lock lever	

部品番号 Part No.	名称 Name	備考 Remarks
P33FB		
P33FB 126-5	上地スイッチコード Switch cord	
403-1 (01)(02)	レバー押えねじ Wind-up lever screw	
405-2	レバー軸ナット Lever axle nut	
408	巻上軸 Film-advance shaft	
408A	スプロ制限解除板 Sprocket stopper release plate	
★473	スイッチ制限軸 Switch stopper axle	
★483	クリックレバーバネ Click lever spring	
483-6	クリックレバーバネ Click lever spring	
502-1	枚数計 Frame-counter dial	
★505	カウンターバネ Counter spring	
505-6	カウンターバネ Counter spring	
★506	止爪 Ratchet claw	
★507	止爪ナット Ratchet	
★508	止爪カラー Ratchet claw collar	
508-6	零戻しレバーナット Counter reverse lever nut	
509-6	クリックレバーカラー Click lever collar	
510-6	送り爪ギアー Advance claw gear	
511-6	カウンター連動ギアー Counter gear	
★512	送り爪レバー軸 Advance claw lever axle	

部品番号 Part No.	名称 Name	備考 Remarks
P33FB ★514	送り爪レバー軸カラー Advance claw lever axle collar	
★521	零戻しバネ Resetting spring	
521-6	送り爪バネ Claw spring	
522A-5	零戻しレバーバネ Counter reset lever spring	
★523	零戻しレバー軸 Counter reset lever axle	
★532-1	ラチェット Ratchet	
532-6	ラチェット Ratchet	
533	指標板 Frame-counter index	
812-5	小ねじ JCIS + PM 1.7x2.5 Type (1) Screw	
812A-5	小ねじ JCIS + PM 1.7x2.0 Type (3) Screw	
★831	小ねじ JCIS + CM 1.4x4 Type (1) Screw	
831-6	スイッチ制限Gリング Switch stopper G-ring	
844-5	小ねじ JCIS + CM 2.0x5.0 Type (3) Screw	
845-5	小ねじ JCIS + CM 2.0x3.0 Type (1) Screw	
845A-5	小ねじ JCIS + PM 1.7x3.0 Type (1) Screw	
★K5	送り爪レバー Advance lever	
★K6	零戻しレバー Counter release lever	

部品番号 Part No.	名称 Name	備考 Remarks

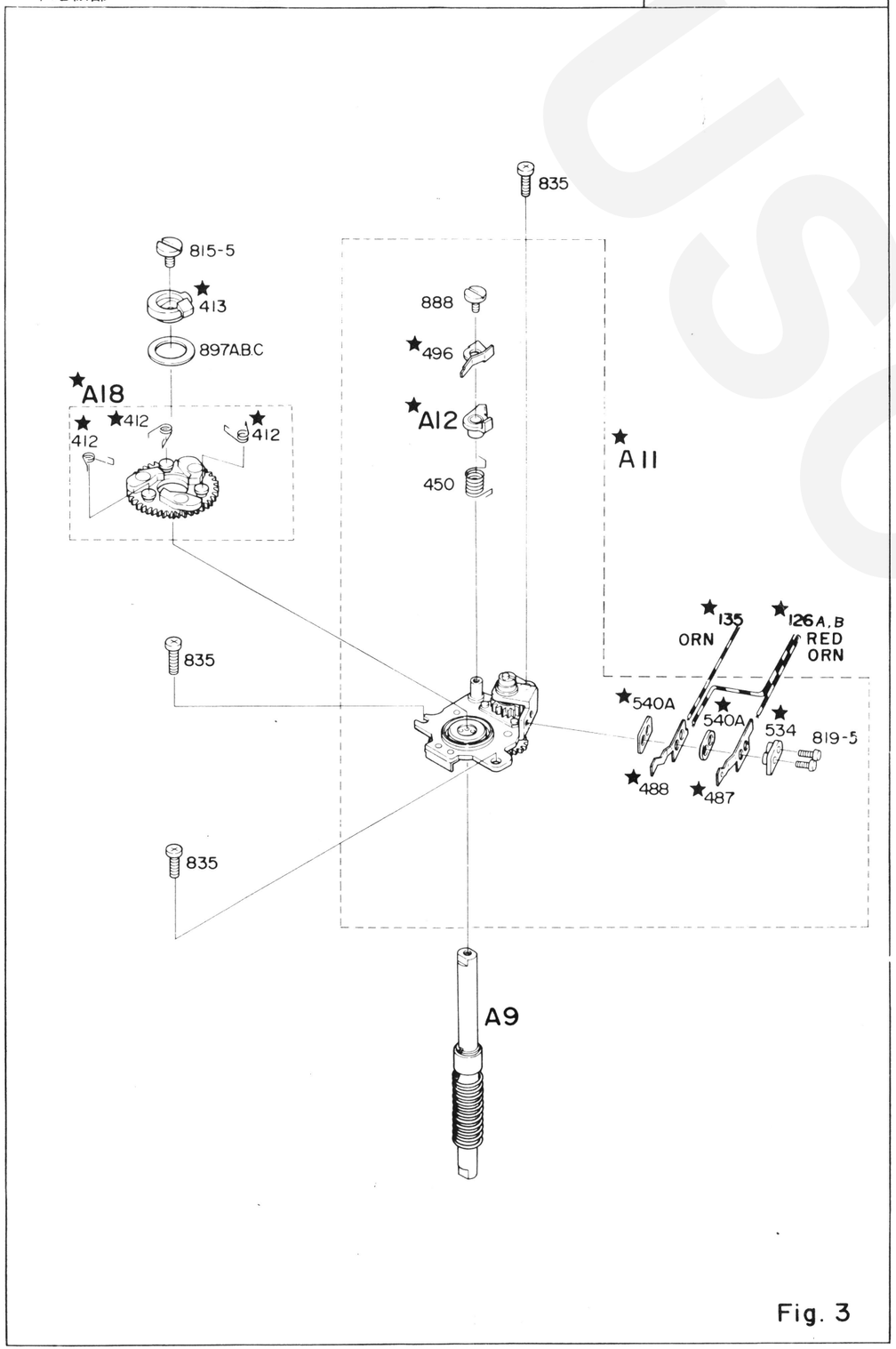

Fig. 3

NEW

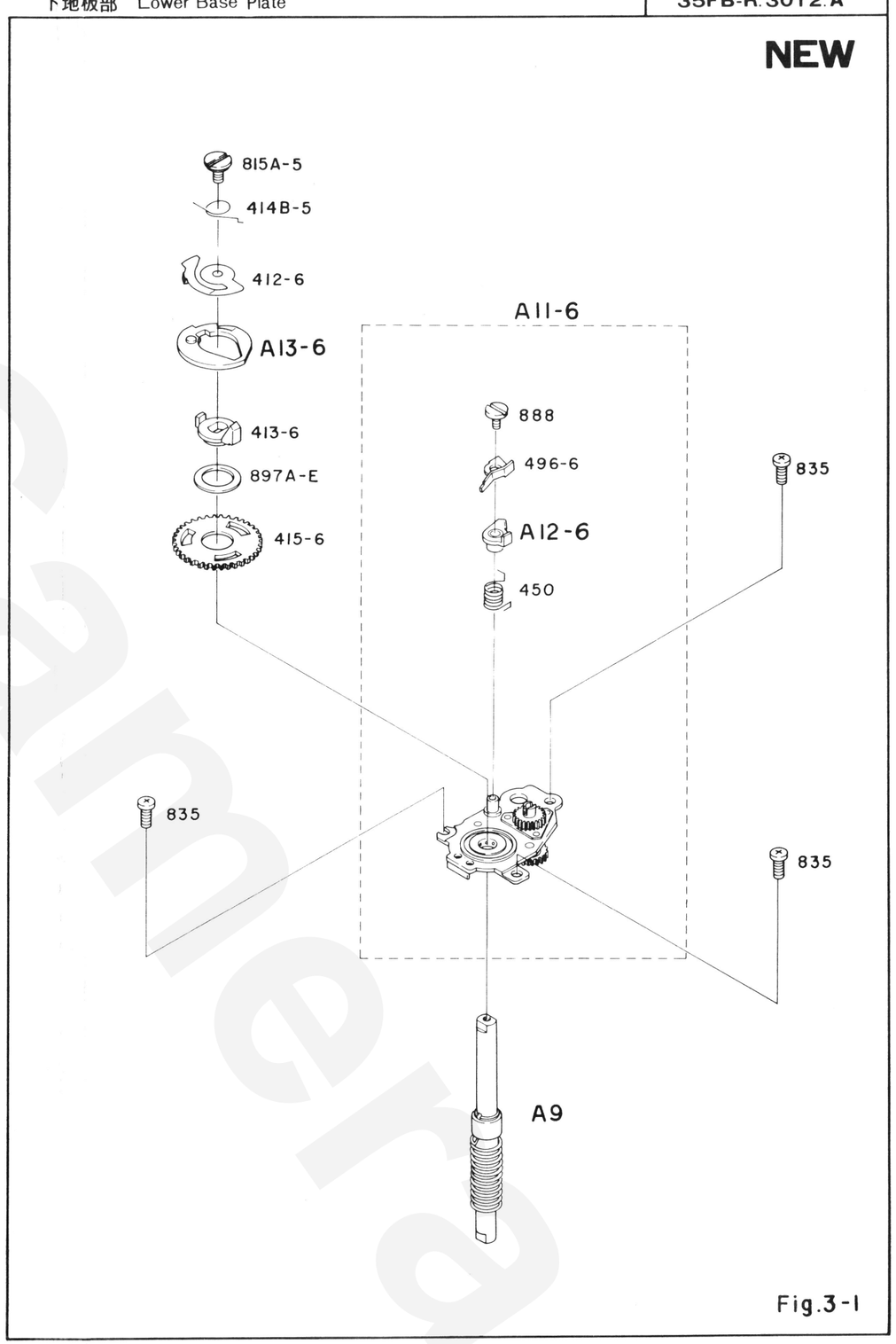

Fig.3-1

USCamera

部品番号 Part No.	名称 Name	備考 Remarks
35FB ★126A,B	レバースイッチコード Lead wire, lever switch	
★135	マグネットプラスコード Lead wire, magnet	
★A11	下地板 Lower base plate	
P33FB		
★P33FB 412	三羽根爪押えバネ Charge cam claw retaining spring	
412-6	面カム板バネ Clutch cam spring	
★413	巻上げカム Film advance cam	
415-6	巻上げギアー Advance gear	
414B-5	面カムねじりバネ Clutch spring	
450	スプロストッパー戻しバネ Sprocket stopper returning spring	
★487	主スイッチ切片A Lever switch contact A	
★488	主スイッチ切片B Lever switch contact B	
★496	スプロ制限板バネ Sprocket stopper spring	
496-6	スプロ制限板バネ Sprocket stopper spring	
★534	スイッチ押え板 MD switch cover	
★540A	MDスイッチ絶縁 MD switch insulation plate	
815-5	巻上軸ビス Film-advance shaft screw (left-handed)	
815A-5	巻上軸ビス Film-advance shaft screw (left-handed)	

部品番号 Part No.	名称 Name	備考 Remarks
835	下地板ビス Screw	
888	スプロストッパービス Sprocket stopper screw	
897A B,C,E	座金 Washer	
A9	スプール軸 Spool shaft	
A11-6	下地板 Lower base plate	
★A12	スプロストッパー Sprocket stopper	
A12-6	スプロストッパー Sprocket stopper	
★A18	巻上げギアー Wind-up gear	
A13-6	面カム Clutch cam	
33FB		
33FB 819-5	小ねじ JCIS ⊕ PM 1.4 x 3 Type (3) Screw	

Usecamera

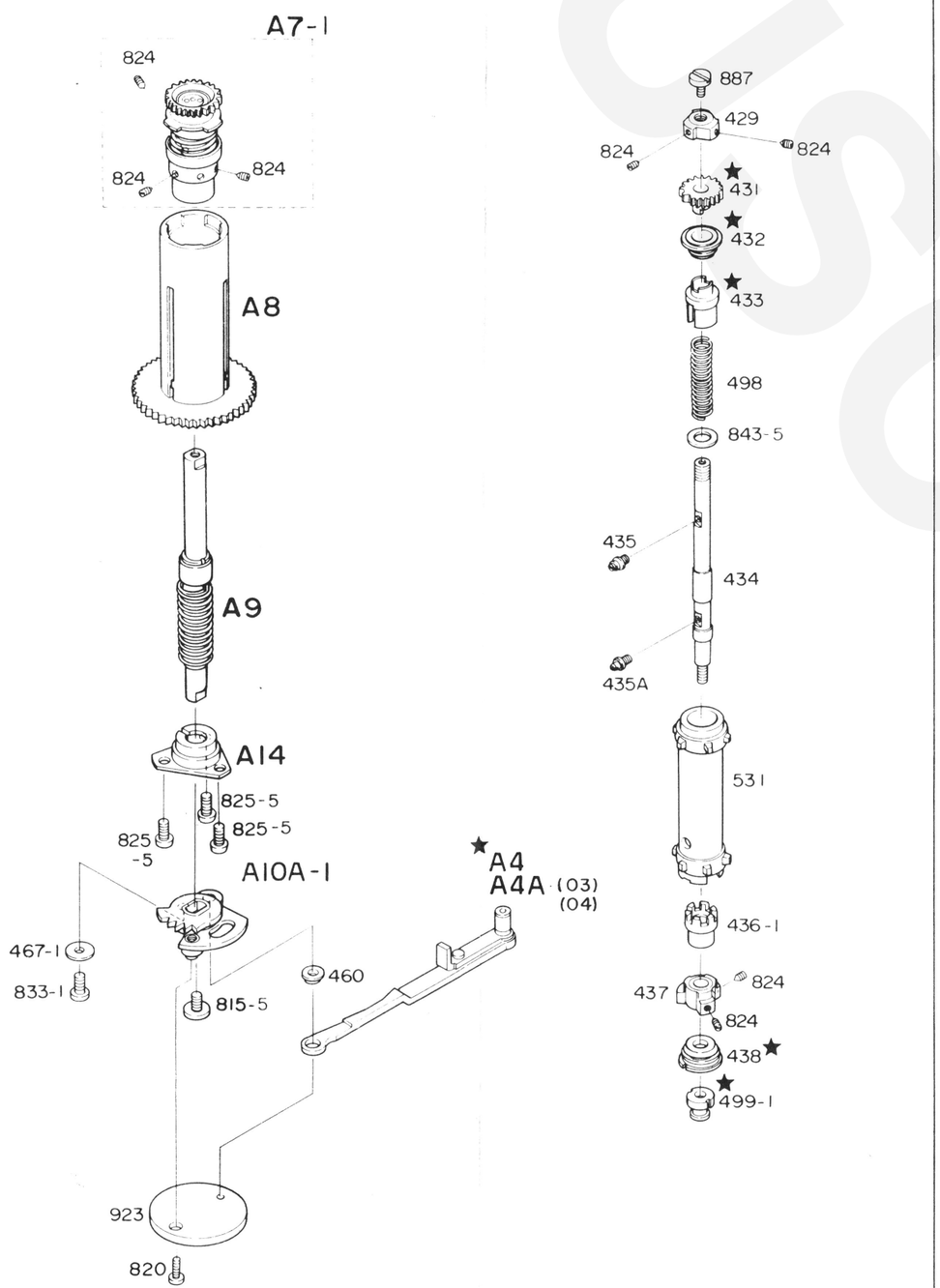

Fig. 4

NEW

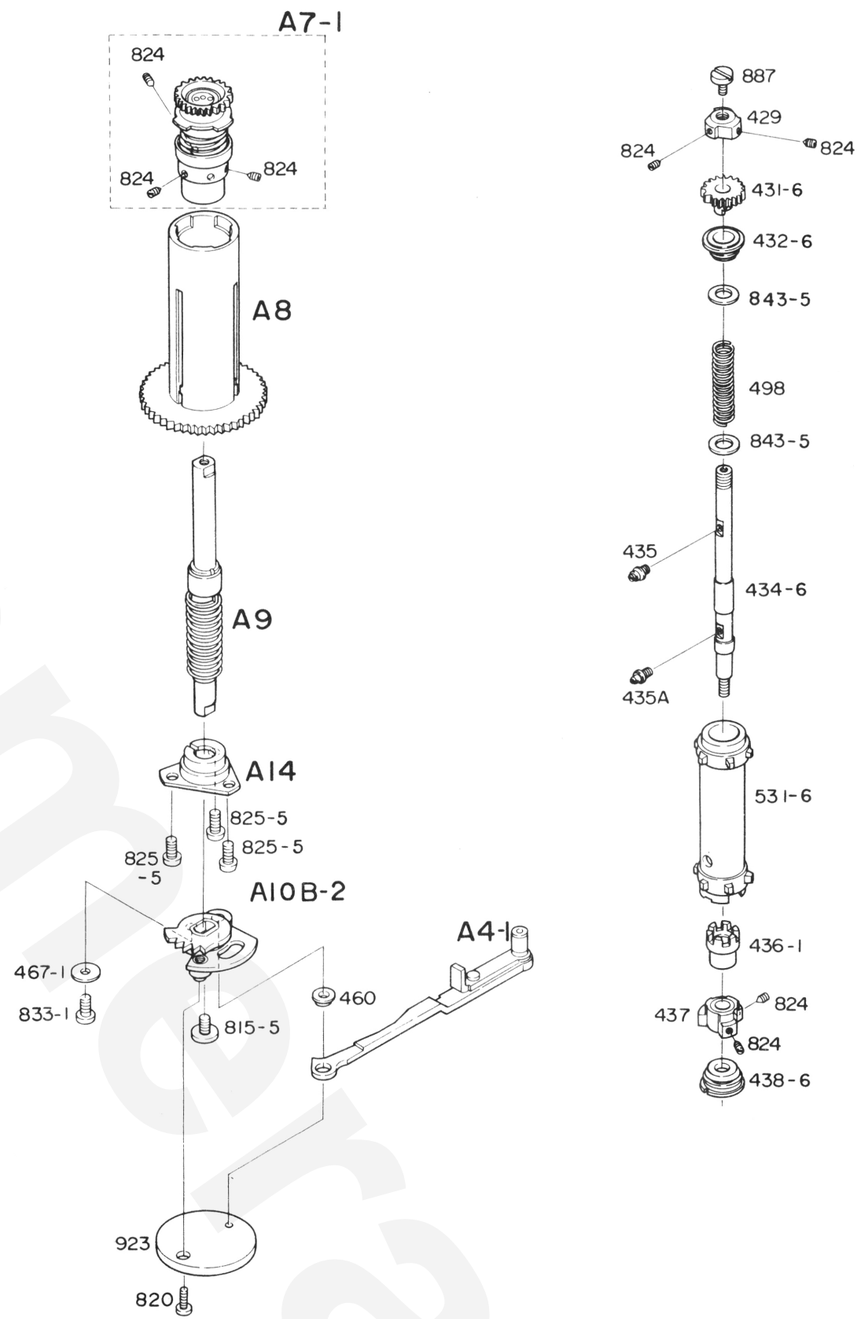

Fig. 4-1

USCamera

部品番号 Part No.	名称 Name	備考 Remarks	部品番号 Part No.	名称 Name	備考 Remarks
P33FB			531-6	スプロケット Sprocket	
P33FB 429	スプロケット制限カム Sprocket stopper cam		815-5	巻上軸ビス（左ネジ） Film-advance shaft screw	
★ 431	スプロ上ギアー Sprocket upper gear		815A-5	巻上軸ビス Film-advance shaft screw	
431-6	スプロ上ギアー Sprocket upper gear		820	カップリングビス Coupling screw	
★ 432	スプロケット上軸受 Sprocket shaft bearing		824	ギアーセットビス Gear set screw	
432-6	スプロケット上軸受 Sprocket shaft bearing		825-5	小ねじ JCIS + PM 2.0x2.5 Type (1) Screw	
★ 433	スプロケットカラー Sprocket collar		833-1	ゆるみ止ビス Set screw	
434	スプロケット軸 Sprocket shaft		843-5	スプロケットバネ受座金 Washer	
434-6	スプロケット軸 Sprocket shaft		887	スプロケット左ねじ Sprocket screw (left handed)	
435	スプロケットビス Sprocket screw		923	モーターカップリング Motor coupling	
435A	スプロケットビスA Sprocket screw				
436-1	スプロケットローラーA Sprocket roller A		★ A4	シャッターチャージレバー Shutter charge lever	
437	スプロカラーAナット Sprocket collar A nut		★ A4A (03)(04)	シャッターチャージレバー Shutter charge lever	
★ 438	スプロ軸受 Sprocket shaft bearing		A4-1	シャッターチャージレバー Shutter charge lever	
438-6	スプロ軸受 Sprocket shaft bearing		A7-1	スプール上ギアー Spool upper gear	
460	セットカムカラー Set cam collar		A8	スプール Spool	
467-1	ゆるみ止めカラー Collar		A9	スプール軸 Spool shaft	
498	スプロケットバネ Sprocket spring		A10A-1	セットカムA Set cam A	
★ 499-1	スプロケットバネ Sprocket shaft collar		A10B-2	セットカムB Set cam B	
531	スプロケット Sprocket		A14	スプール軸受ケース Spool shaft bearing cause	

部品番号 Part No.	名称 Name	備考 Remarks	部品番号 Part No.	名称 Name	備考 Remarks
33FB					
33FB 79-1	緩衝板 Shock absorb plate				

Camera

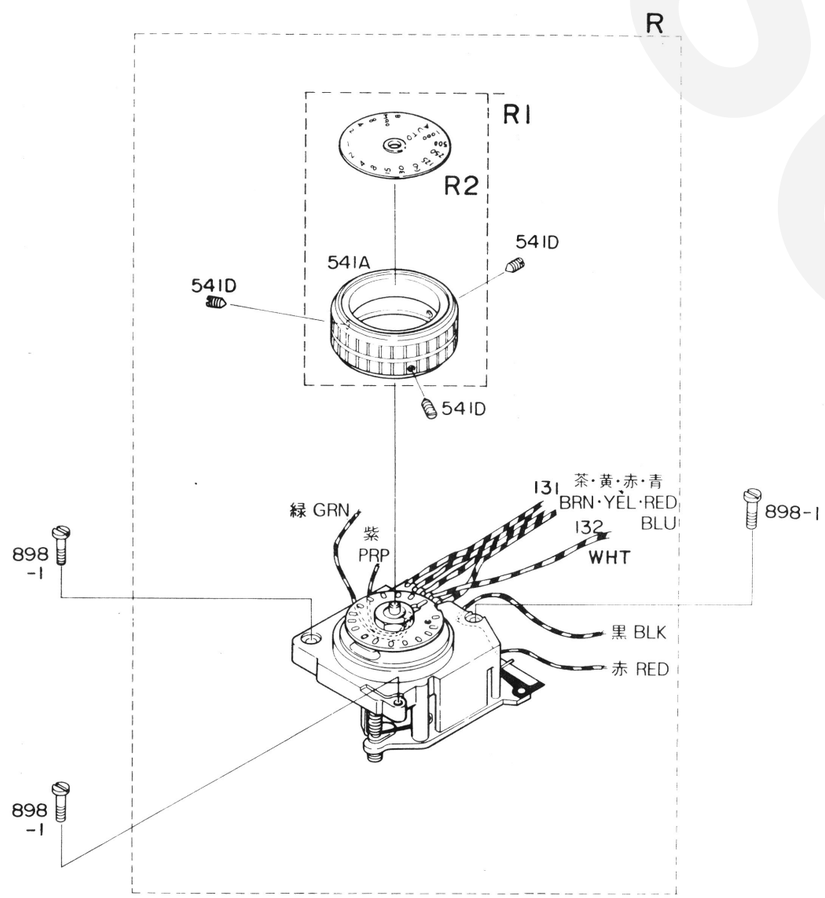

Fig. 5

NEW

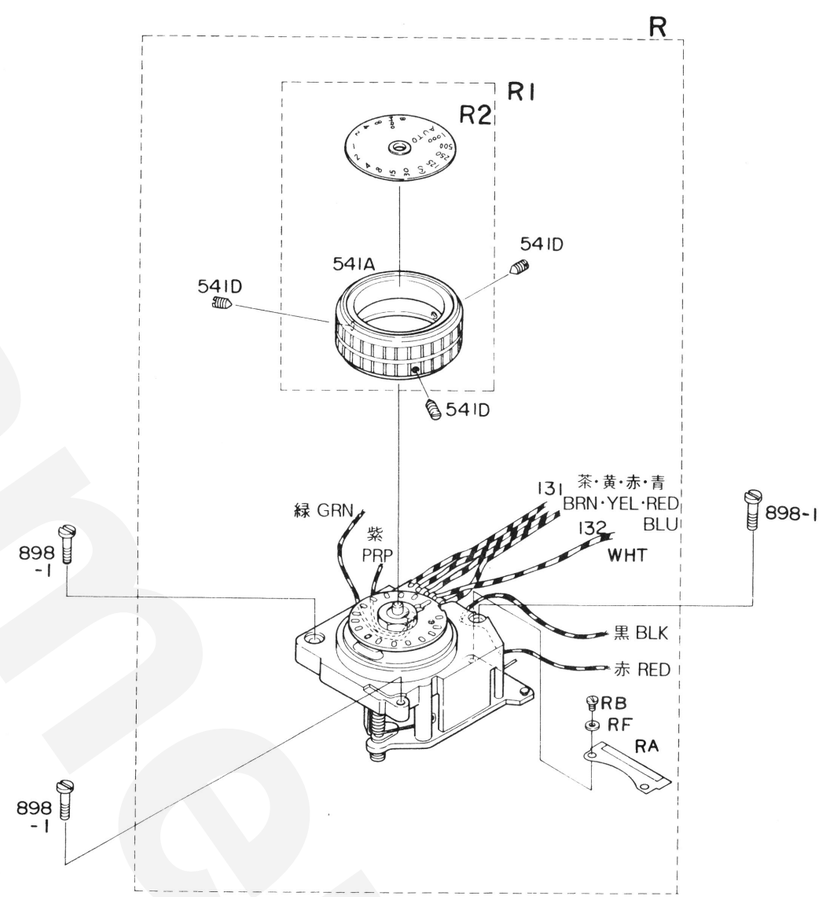

Fig. 5-1

USCamera

部品番号 Part No.	名称 Name	備考 Remarks	部品番号 Part No.	名称 Name	備考 Remarks
35FB 131	管制部コードA Lead wire A, Shutter speed control				
132	管制部コードB Lead wire B, Shutter speed control				
541A	シャッターダイヤル管 Shutter dial tube				
541D	ボタン飾り座 Set screw				
898-1	Sダイヤル基板ビス Screw				
RA	Fフィルム止めビス Screw				
RB	Fフィルム F-Film				
RF	Fフィルム止めワッシャー Washer				
R	管制部 Shutter speed control				
R1	シャッターダイヤル部 Shutter dial				
R2	シャッター目盛板部 Shutter speed scale				

iscamera

35FB-R.3012.A

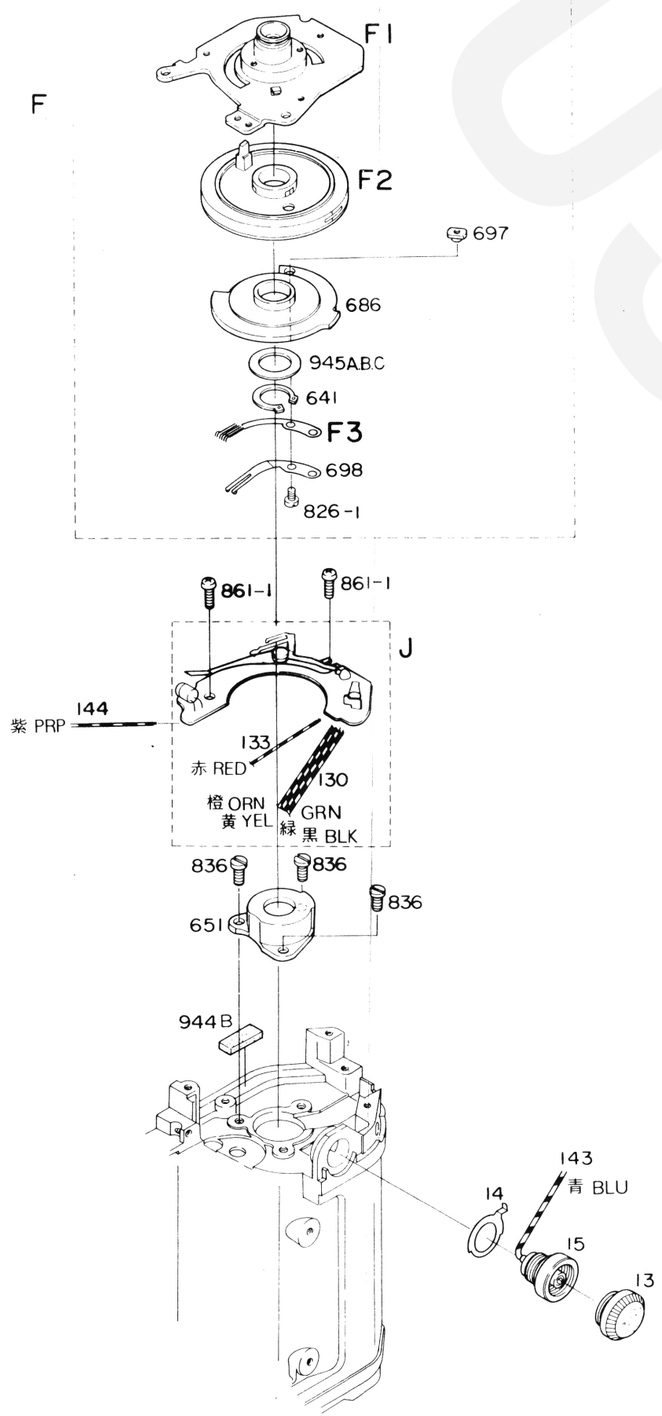

Fig. 6

35FB-R.3012.A

NEW

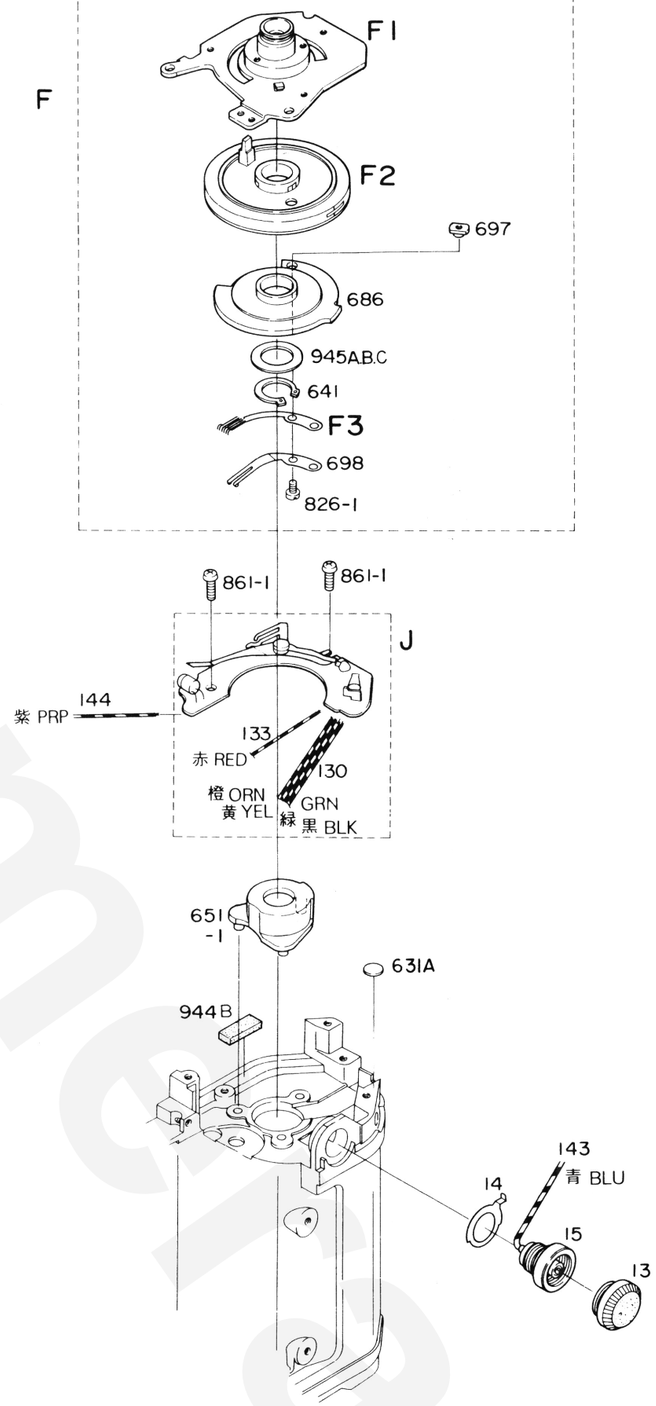

Fig. 6-1

USCamera

部品番号 Part No.	名称 Name	備考 Remarks	部品番号 Part No.	名称 Name	備考 Remarks
35FB 14	ターミナルアース板 Terminal earth plate		35FB F	FRE部 FRE	
130	FRE コード Lead wire, FRE		F1	ASA ダイヤル基板 ASA dial mount	
133	グラスコードA Lead wire A		F2	FRE 環 FRE ring	
143	シンクロコードB Lead wire B, synch.		F3	ブラシA Brush A	
144	チェッカーコード Lead wire, checker		J	FRE プリント板 Printed circuit	
631A	Jプリント板座金 J print plate holder				
641	止め輪 Snap ring				
651	巻戻軸受 Rewind shaft bearing		**P33FB**		
651-1	巻戻軸受 Rewind shaft bearing		P33FB 13	ターミナルキャップ Terminal	
686	ブラシギヤー Brush gear		15	シンクロソケット Synch. socket	
697	ブラシナット Brush nut				
698	摺動ブラシB Sliding brush B				
826-1	ブラシ板ビス Brush screw				
836	巻戻し軸受ビス Rewind shaft bearing screw				
861	FRE プリント板ビス FRE printed board screw				
944B	Jプリント板ゴム J print rubber				
945A B,C	FRE ギヤ調整ワッシャー Washer				

usecamera

35FB-R.3012.A

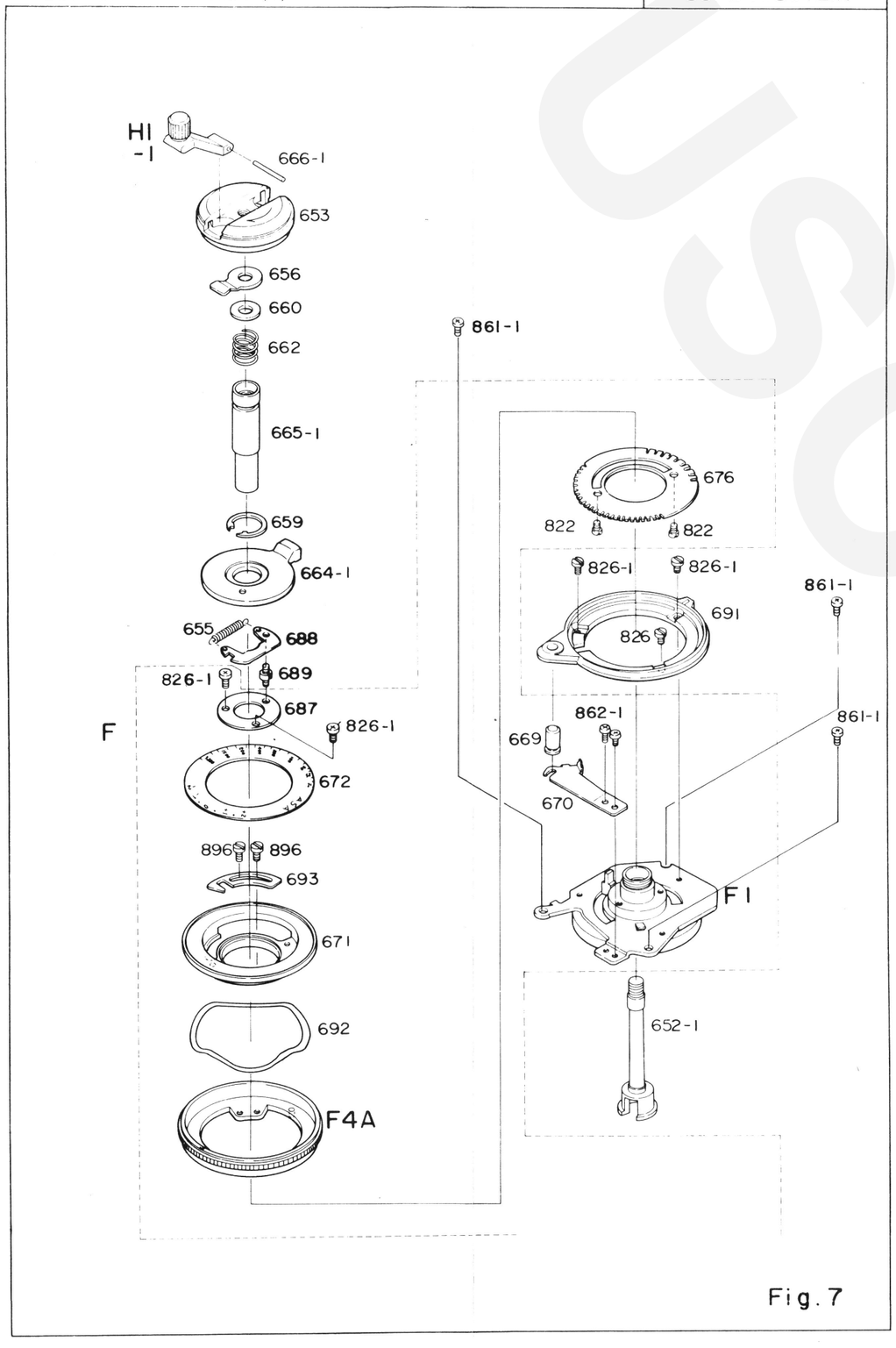

Fig.7

35FB-R.3012.A

NEW

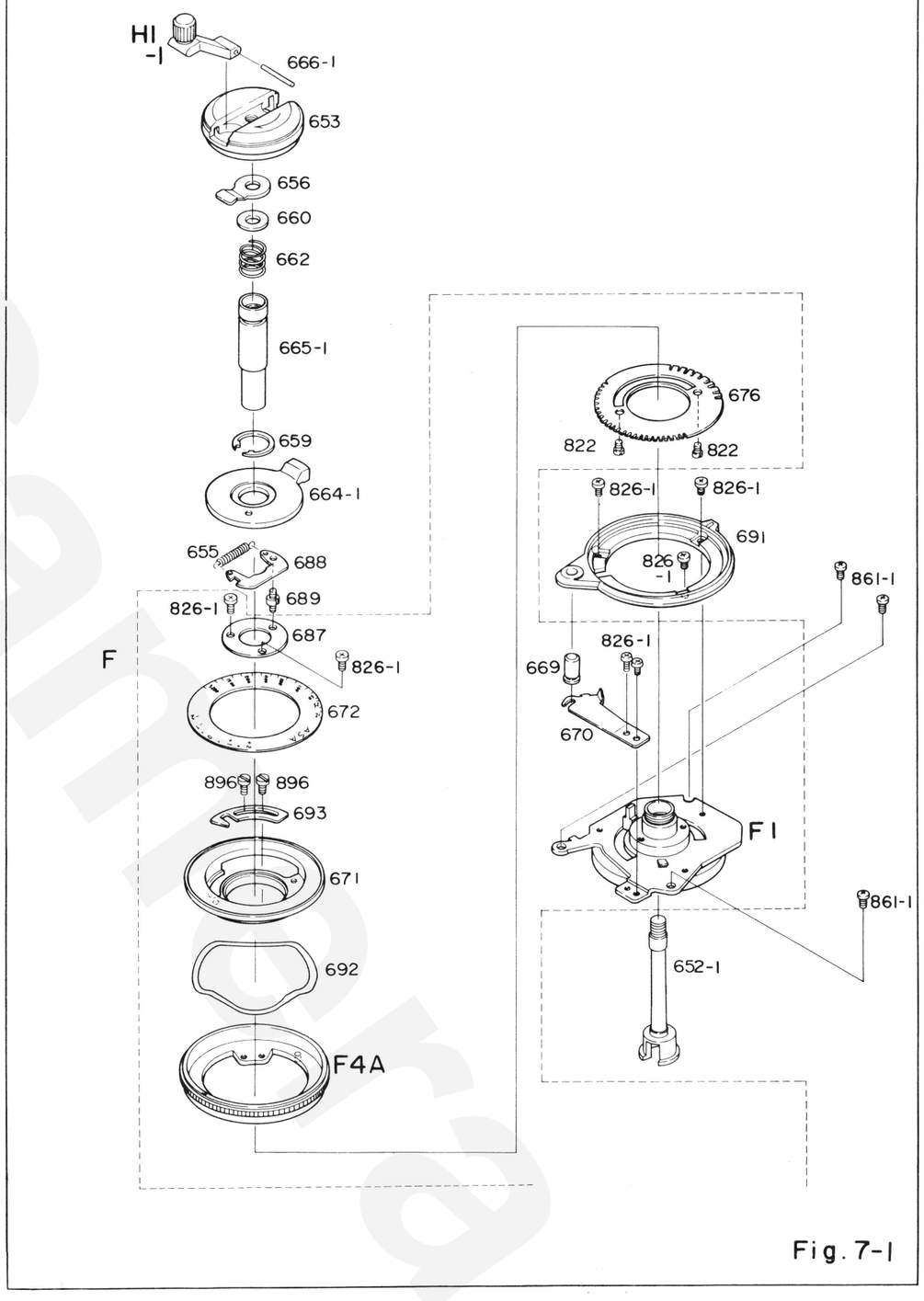

Fig.7-1

部品番号 Part No.	名称 Name	備考 Remarks	部品番号 Part No.	名称 Name	備考 Remarks
35FB 652-1	巻戻し軸 Rewind shaft		35FB 826-1	ブラシ板ビス Brush screw	
653	巻戻しノブ Rewind knob		896	連動板取付ビス Aperture coupling plate screw	
655	巻戻し軸受け板用バネ Spring		861-1	FRE プリント板ビス FRE printed screw	
659	開閉ノブ押えクリップ Cover latch retaining clip				
660	巻戻し軸座金 Rewind shaft washer		F	FRE 部 FRE	
662	フリクションバネ Friction spring		F1	ASA ダイヤル基板 ASA dial mount	
664-1	開閉ノブ O.C. knob		F4A	ASA ダイヤル ASA	
665-1	巻戻軸ガイド Rewind shaft guide		H1	巻戻しレバー Rewind crank	
669	ASA クリック釦 ASA click button				
670	クリックバネ ASA click spring				
671	ASA 目盛貼付環 ASA dial base disk		**P33FB**		
672	ASA 目盛板 ASA dial		P33FB 656	レバー受バネ Rewind crank spring	
676	ASA クリック板 ASA click plate		666-1	巻戻しレバー軸 Rewind crank shaft	
687	目盛貼付環押え板 ASA dial base disk				
688	開閉ロックレバー Rewind knob lock lever				
689	ロックレバー軸 Knob lock lever shaft				
691	ASA ダイヤル受座 ASA dial mount				
692	露出補正バネ Exposure correction spring				
693	ASA 連動板 ASA coupler				
822	ASA 目盛貼付環制限 ASA-dial base disk stopper				

Kamera

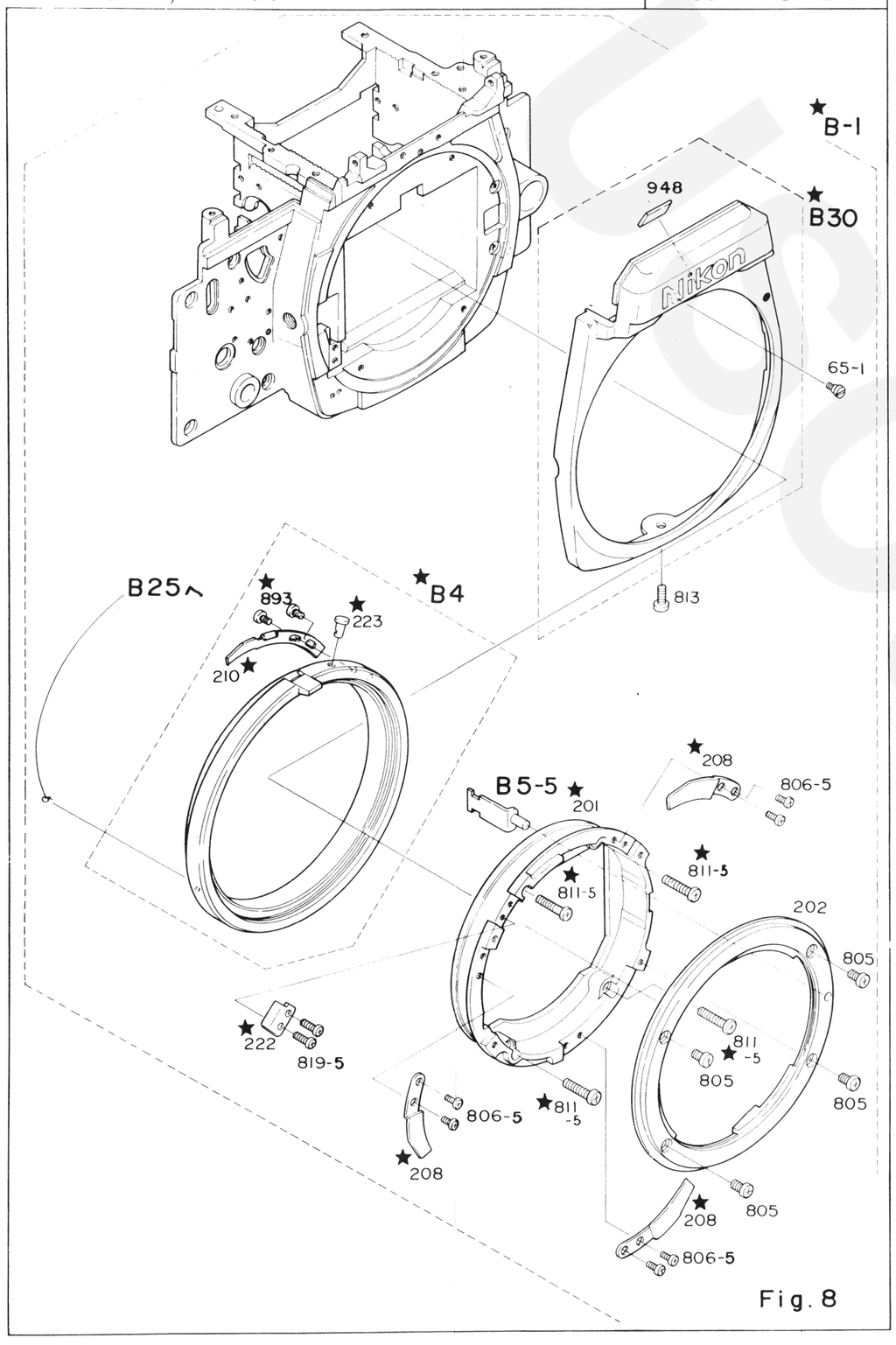
★B-1
948
★B30
Nikon
65-1
813
B25へ
★893
★223
★B4
210★
★208
B5-5 ★201
806-5
★811-5
811-5
202
805
★222
819-5
811
★-5
805
805
806-5
★811
-5
★208
805
★208
806-5

Fig. 8

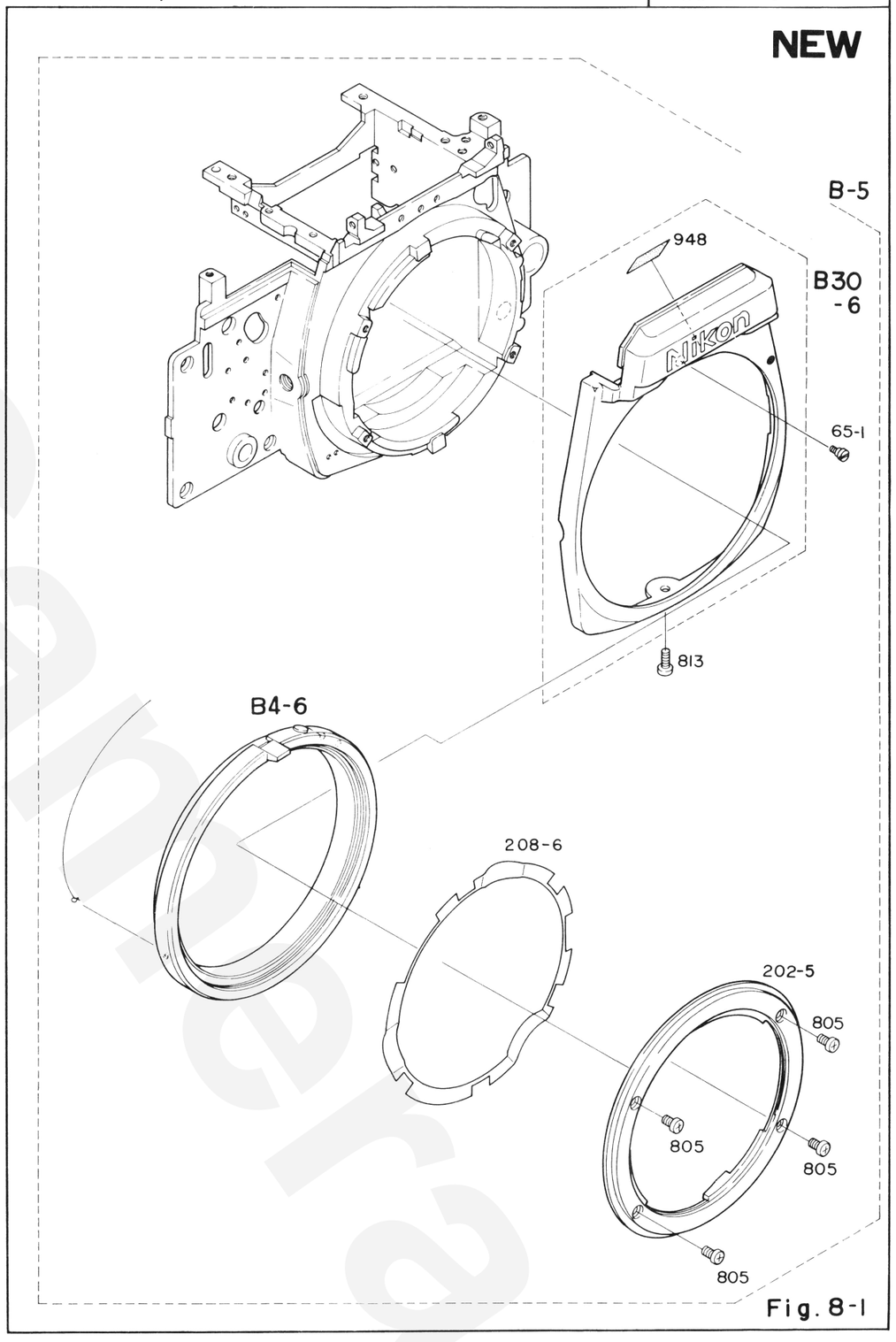
NEW
B-5
948
B30
-6
Nikon
65-1
813
B4-6
208-6
202-5
805
805
805
805

Fig. 8-1

部品番号 Part No.	名称 Name	備考 Remarks	部品番号 Part No.	名称 Name	備考 Remarks
35FB ★201	マウント台 Bayonet mount		**P33FB**		
★222	連動環回転制限 Coupling ring stopper		P33FB 65-1 (01)(02)	前カバー用段ビス Front cover screw	
806-5	小ねじ JCIS ⊕ PM 1.7x1.8 Type (1) screw		202	バヨネット環 Bayonet	
948	F窓遮光テープ Light-baffle tape		202-5	バヨネット環 Bayonet	
			★208	バヨネットバネ Bayonet spring	
★B-1	前板 Front plate		208-6	バヨネットバネ Bayonet spring	
B-5	前板 Front plate		★210	バヨネットバネ Bayonet spring	
★B4	絞り連動環 Aperture coupling ring		★223	連動片バネボタン Coupling piece spring button	
B4-6	絞り連動環 Aperture coupling ring		805	バヨネット止ビス Bayonet set screw	
B6-6	着脱釦 Lens release button				
★B30	前カバー銘板 Front cover		813 (01)(02)	前カバービス Front cover screw	
B30-6	前カバー銘板 Front cover		893	絞り連動片バネビス Aperture coupling piece screw	
			33FB		
			B5-5	着脱レバー Lens release lever	
			819-5	小ねじ JCIS ⊕ PM 1.4x3 Type (3) screw	
			★811-5	バヨネット台ビス Screw	

Iscamera

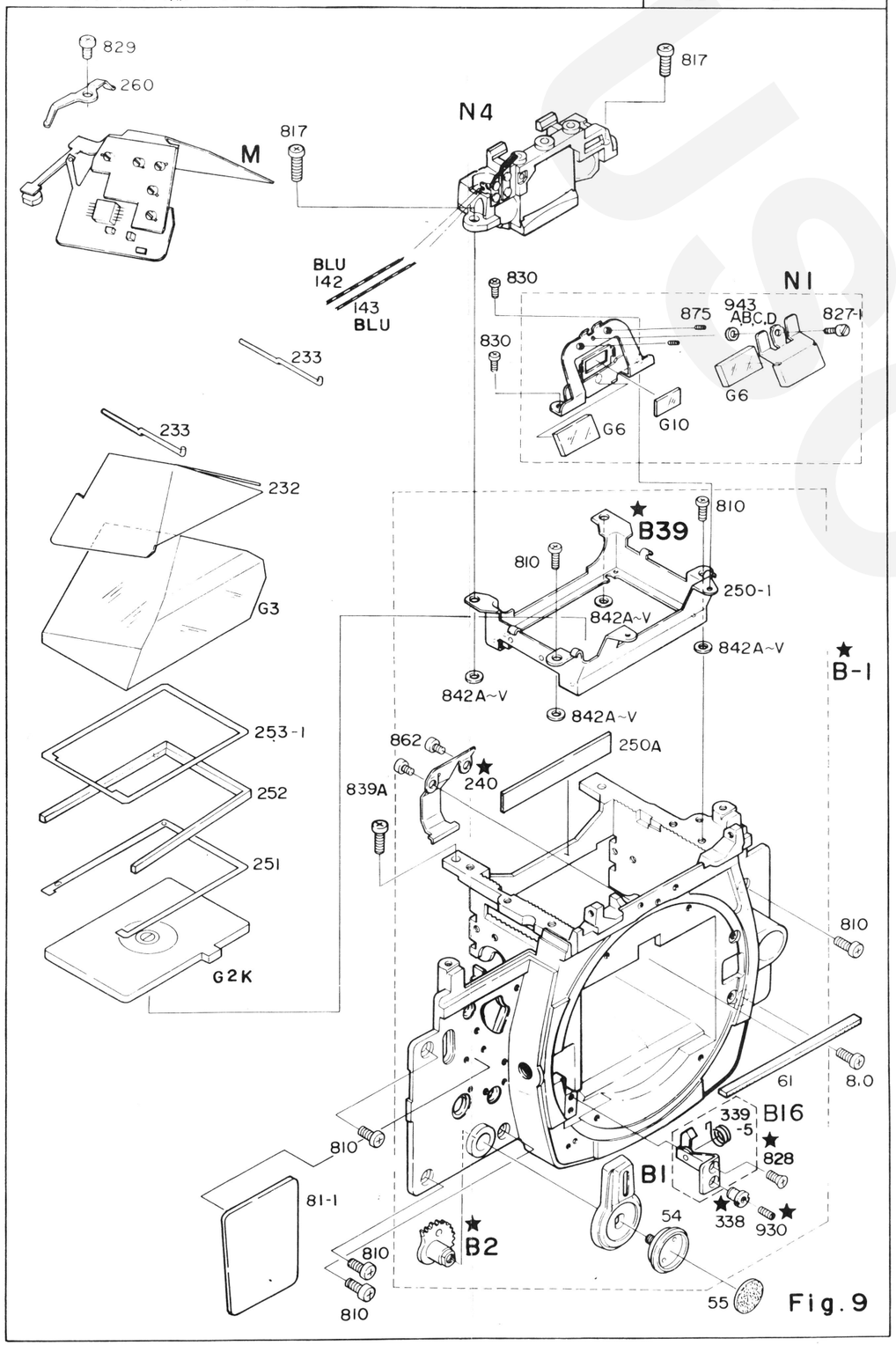
829
260
817
N4
M
817
BLU
142
143
BLU
830
N1
875
943
A,B,C,D
827-1
830
G6
G10
G6
233
233
232
B39
810
810
250-1
842A~V
842A~V
G3
842A~V
842A~V
B-1
253-1
862
250A
240
839A
252
251
G2K
810
61
8.0
810
339
-5
B16
828
B1
81-1
54
338
930
B2
810
810
55

Fig. 9

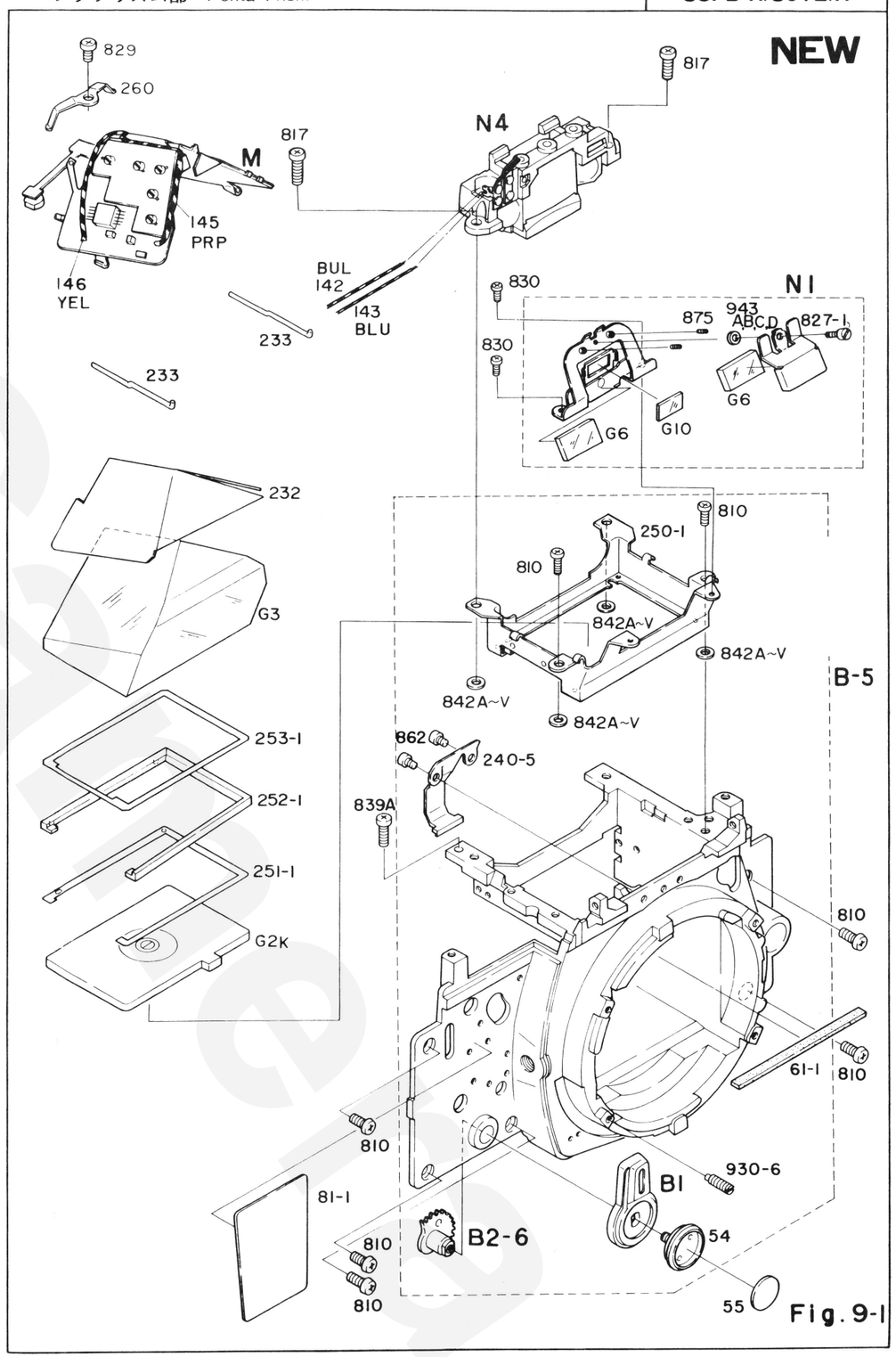
NEW
829
260
817
N4
M
817
145
PRP
146
YEL
BUL
142
143
BLU
830
N1
875
943
A,B,C,D
827-1
830
G6
G10
G6
233
233
232
810
250-1
810
842A~V
842A~V
G3
842A~V
842A~V
B-5
253-1
862
240-5
839A
252-1
251-1
G2K
810
61-1
810
810
930-6
B1
81-1
B2-6
54
810
810
55

Fig. 9-1

部品番号 Part No.	名称 Name	備考 Remarks	部品番号 Part No.	名称 Name	備考 Remarks
35FB 61	ミラーアップ受けモルト Mirror-up buffer		35FB 828	小ねじ JCIS ⊕ CM 2x2.5 Type (1) screw	
61-1	ミラーアップ受けモルト Mirror-up buffer		829	小ねじ Screw	
81	前板貼板 Front plate hole-cover		839A	小ねじ JCIS ⊕ PM 1.7x5 Type (3) screw	
142	シンクロコードA Lead wire A, synch.		862	小ねじ JCIS ⊕ PM 1.7x1.5 Type (1) screw	
143	シンクロコードB Lead wire B, synch.		★ 930	ミラースイッチ調整ビス Mirror switch adjusting screw	
145	ジャンピングワイヤA Lead wire A		943 A ~ D	Fミラー調整座金 Washer	
146	ジャンピングワイヤB Lead wire B		G2K	フレネルKタイプ Fresnel screen K type	
232	プリズム押えシート Prism retainer		G10	レンズ Lens	
233	プリズム押えバネ Prism retainer spring				
★ 240	スクリーンロックバネ Screen lock rivet		★ B-1	前板 Front plate	
240-5	スクリーンロックバネ Screen lock rivet		B-5	前板 Front plate	
250-1	プリズムボックス Prism		★ B2	セルフ連動レバー Self-timer lever	
250A	プリズムボックス内ルミラー Prism box light baffle		B2-6	セルフ連動レバー Self-timer lever	
251	視野枠 Finder field frame		★ B16	45° ストッパー 45° stopper	
251-1	視野枠 Finder field frame		★ B39	プリズムボックス Prism box	
252-1	間隔枠 Spacer		M	IC プリント板 IC printed circuit	
253-1	プリズム絞り板 Prism mask		N1	ミラー保持基板 Mirror retaining base plate	
260	SBC プリント板押え SPD printed board retainer		N4	接眼モールド Eyepiece mold	
★ 338	45° ストッパー座止めビス 45° stopper base screw				
827-1	小ねじ JCIS ⊕ PM 1.4x2.0 Type (1) screw				

部品番号 Part No.	名称 Name	備考 Remarks	部品番号 Part No.	名称 Name	備考 Remarks
P33FB			**33FB**		
P33FB 54 (01)(02)	セルフレバービス Self-timer lever screw		33FB 339-5	45° ストッパーバネ 45° stopper spring	
55	セルフレバー用革 Leatherette				
810	前板取付ビス Front plate screw				
817	小ねじ JCIS + PM 2.0x5.0 Type (3) screw				
830	小ねじ JCIS + PM 1.4x2.0 Type (3) screw				
842 A ~ V	調整座金 Washer				
875	止めねじ Set screw				
G3	プリズム Prism				
G6	反射ミラー Aperture readout reflex mirror				
B1	セルフレバー Self-timer lever				

前板部　Front Plate (1)

35FB-R.3012.A

836
642
827-1
827-1
★B25
★B-1
261
217-5
B38-5
395
★383
842M
★B20
★856
850-1
825-5
394
59
★B7
642
19
20
42
★B19
519
519
518A
266★
267★
283-5
935
937
934
936
818
36A-1
36B-1
812-5
812-5
(812)
★939
946
★B9-1
839-1
128A,B
ORN
PIN
140
GRA
139 BLK

Fig.10

前板部　Front Plate (1)

35FB-R.3012.A

NEW

836
642
899
899
B25-6
B-5
261
B38-5
395
383-1
842M
951
B6-6
212-6
214A-6
642
59
19
20
42
B19-6
519
519
518A
B20-1
394
825-5
935
937
934
936
818
36A-1
36B-1
812-5
812-5
946
B9-6
839-1
128A,B
ORN
PIN
140
GRA
139
BLK

Fig.10-1

部品番号 Part No.	名称 Name	備考 Remarks
35FB 19	セルフ連動ギヤB Self-timer gear B	
20	セルフ連動軸 Self-timer coupler	
36A-1	メモリースイッチバネA Memory switch spring A	
36B-1	メモリースイッチバネB Memory switch spring B	
42	セルフギヤ制限 Self-timer gear stopper	
128 A B	シャッタースイッチコード Lead wire, shutter switch	
139	メモリーロックコード Lead wire, memory lock	
140	ミラースイッチコード Lead wire, mirror switch	
214A-6	着脱ピン押えバネ Lens release spring	
★266	コロレバー軸 Roller lever axle	
★267	コロレバーバネ Roller lever spring	
518A	シーソーレバー Seesaw lever	
519	レリーズレバー軸 Release lever axle	
642	E-リング E-ring	
818	小ねじ JCIS ⊕ PM 1.7x3 Type (3) screw	
827-1	ブラシ連動ギヤービス Brush coupling gear screw	
839-1	小ねじ JCIS ⊕ PM 1.7x4.5 Type (3) screw	
899	ブラシ連動ギヤービス Brush gear screw	
934	メモリースイッチA Memory lock switch A	
935	メモリースイッチB Memory lock switch B	

部品番号 Part No.	名称 Name	備考 Remarks
35FB 936	メモリースイッチ絶縁板A Memory switch insulator A	
937	メモリースイッチ絶縁板B Memory switch insulator B	
★939	絶縁ルミラー Front plate insulator	
946	ミラースイッチ押え板 Mirror switch retainer	
951	ダンパーワッシャー Washer	
★B-1	前板 Front plate	
B-5	前板 Front plate	
B6-6	着脱釦 Lens release button	
★B7	連動コロ Roller lever	
★B9-1	ミラースイッチ Mirror switch	
B9-6	ミラースイッチ Mirror switch	
★B19	レリーズレバー Release lever	
B19-6	レリーズレバー Release lever	
★B25	ブラシ連動ギヤー Brush coupling gear	
B25-6	ブラシ連動ギヤー Brush coupling gear	

部品番号 Part No.	名称 Name	備考 Remarks
P33FB		
P33FB 59	ミラーボックス下部モルト Mirror box bottom buffer	
261	レンズ着脱ボタン飾り Lens release button pad	
283-5	グリップリング Grip ring	
★383	エアダンパー駆動レバー Air damper lever	
383-1	エアダンパー駆動レバー Air damper lever	
394	エアダンパーホールド Air damper holder	
395	エアダンパー駆動レバー止めビス Air damper lever screw	
812	小ねじ JCIS ⊕ PM 1.7x2.2 Type (1) screw	
812-5	小ねじ JCIS ⊕ PM 1.7x2.5 Type (1) screw	
825-5	小ねじ JCIS ⊕ PM 2.0x2.5 Type (1) screw	
842M	座金 Washer	
850-1	エアダンパーピストンピン Air damper piston pin	
★B20	エアダンパー Air damper	
B20-1	エアダンパー Air damper	
B38-5	ミラーボックス後部遮光板 Mirror box rear light-tight plate	

部品番号 Part No.	名称 Name	備考 Remarks
33FB		
33FB ★856	E-リング E-ring	
★217-5	着脱ボタン Lens release button	

前板部 Front Plate (2)

35FB-R.3012.A

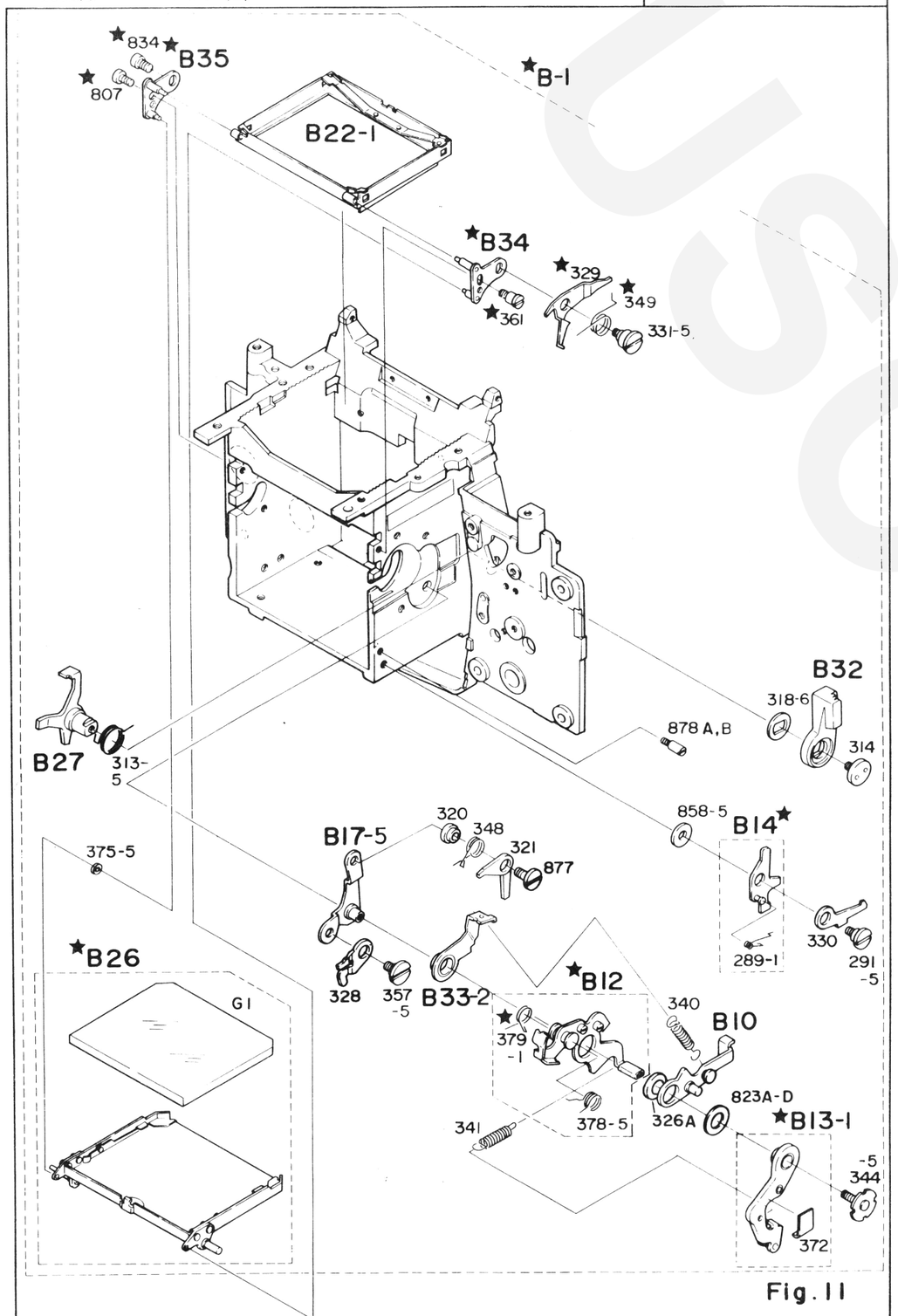

Fig.11

前板部 Front Plate (2)

35FB-R.3012.A

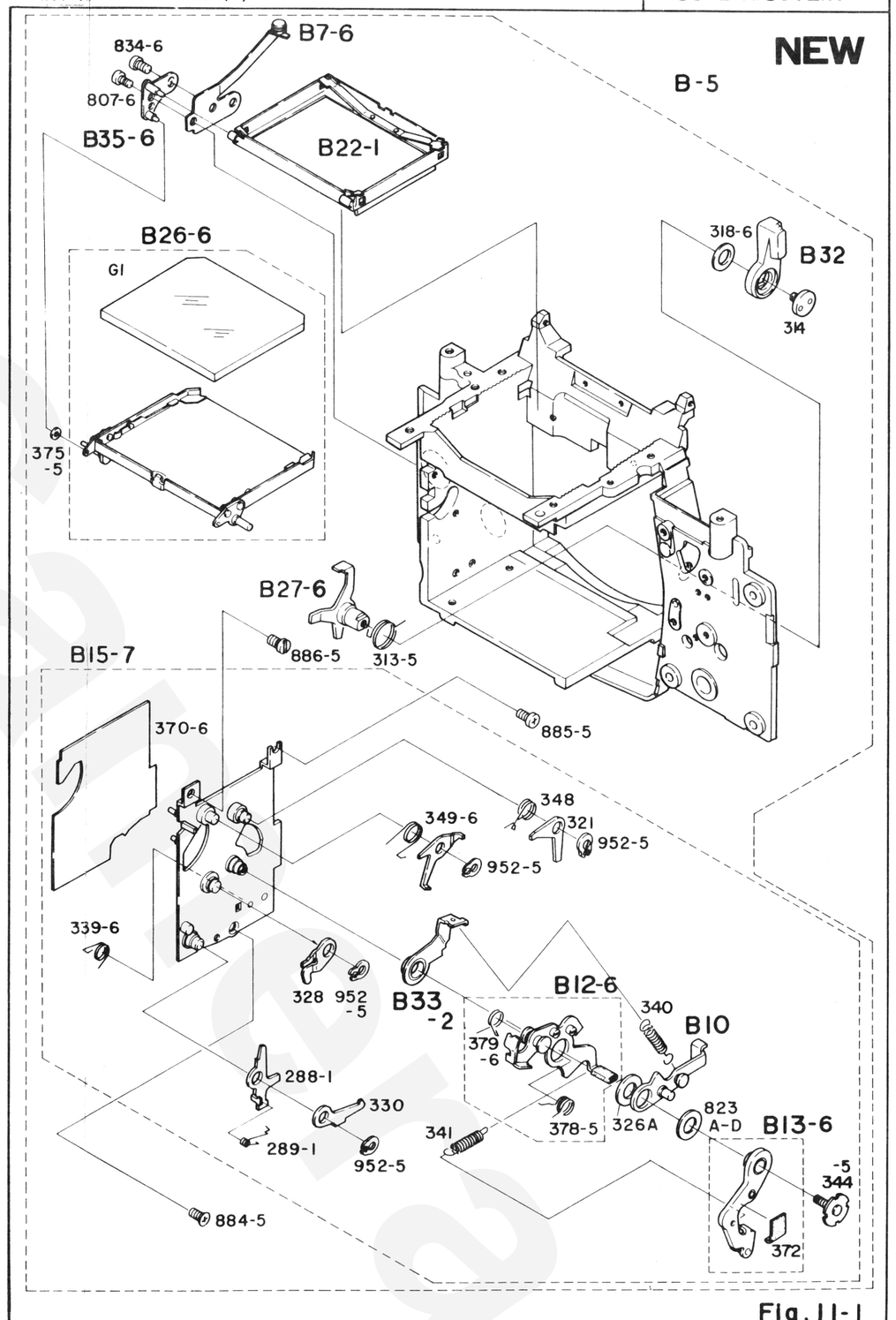

Fig.11-1

部品番号 Part No.	名称 Name	備考 Remarks
35FB 314	絞りレバービス Diaphragm actuating lever screw	
★ 320	シャッターレリーズカラー Shutter release collar	
321	シャッターレリーズレバー Shutter release lever	
★ 329	ミラーアップ押えレバー Mirror-up stop lever	
329-6	ミラーアップ押えレバー Mirror-up stop lever	
339-6	45° ストッパーバネ 45° stopper spring	
348	シャッターレリーズバネ Shutter release spring	
349	ミラーアップバネ Mirror-up spring	
349-6	ミラーアップ押えレバーバネ Mirror-up lever spring	
★ 361	ミラーアップ押えレバーバネ掛け Spring stud	
370-6	遮光紙 Light baffle	
★ 807	小ねじ JCIS ⊕ PM 1.7x2 Type (3) screw	
807-6	小ねじ JCIS ⊕ PM 1.7x2.2 Type (3) screw	
834	小ねじ JCIS ⊕ PM 2x2 Type (1) screw	
834-6	小ねじ JCIS ⊕ PM 2x2.2 Type (1) screw	
★ 877	シャッターレリーズレバー軸 Shutter release lever axle	
884-5	小ねじ JCIS ⊕ CM 1.7x2.5 Type (1) screw	
B-1	前板 Front plate	
B-5	前板 Front plate	

部品番号 Part No.	名称 Name	備考 Remarks
35FB B7-6	連動コロ Roller lever	
★ B12	ミラーアップレバー Mirror-up lever	
B12-6	ミラーアップレバー Mirror-up lever	
★ B13-1	ミラーダウンレバー Mirror-down lever	
B15-7	横基板 Mirror box side plate	
B22-1	スクリーン枠 Screen frame	
★ B26	ミラーホルダー Mirror holder	
B26-6	ミラーホルダー Mirror holder	
B27	手動絞りレバー Stop-down lever	
B32	絞り込みレバー Diaphragm set lever	
★ B34	巻上側ミラー軸止め板 Mirror shaft stopper, advance-lever shaft	
B35	巻戻し側ミラー軸止め板 Mirror shaft stopper, rewind-knob side	
B35-6	巻戻し側ミラー軸止め板 Mirror shaft stopper, rewind-knob side	

部品番号 Part No.	名称 Name	備考 Remarks
P33FB		
P33FB 289-1	ミラー係止レバーバネ Mirror-down signal lever	
288-1	ミラーダウン信号レバー Mirror-down signal lever	
313-5	手動絞りレバーバネ Manual stop-down lever spring	
318-6	手動絞りレバー座 Manual stop-down lever plate	
328	シグナルレバー Signal lever	
330	ミラーダウン係止レバー Mirror-down latch lever	
340	絞りレバーバネ Diaphragm actuating lever spring	
341	ミラーアップバネ Mirror-up spring	
344-5	レバー押えビス Mirror holder screw	
372	防振用ゴム Cushion rubber	
375-5	座金 Washer	
378-5	ミラースプリング（大） Mirror spring (L)	
★ 379-1	ミラースプリング（小） Mirror spring (S)	
379-6	ミラースプリング（小） Mirror spring (S)	
823A -D	ミラーレバー軸調整用座金 Washer	
G1	ミラー Mirror	
326A	ミラーレバーワッシャー Washer	
B10	絞りレバー Diaphragm actuating lever	
B13-6	ミラーダウンレバー Mirror-down lever	

部品番号 Part No.	名称 Name	備考 Remarks
P33FB ☆ B14	ミラーダウン信号レバー Mirror down signal lever	
B27-6	手動絞りレバー Manual stop-down lever	
B33-2	絞りレバーバネ掛け Diaphragm spring stud	
33FB		
33FB 291-5	係止レバー軸 Latch lever axle	
331-5	ミラーアップ押えレバー軸 Mirror-up lever axle	
357-5	シグナルレバー止めビス Signal lever screw	
858-5	E-リング E-ring	
878A,B	ダウン係止レバーストッパー Down-stopper lever stopper	
B17-5	ミラーレバー軸取付板 Mirror lever base plate	

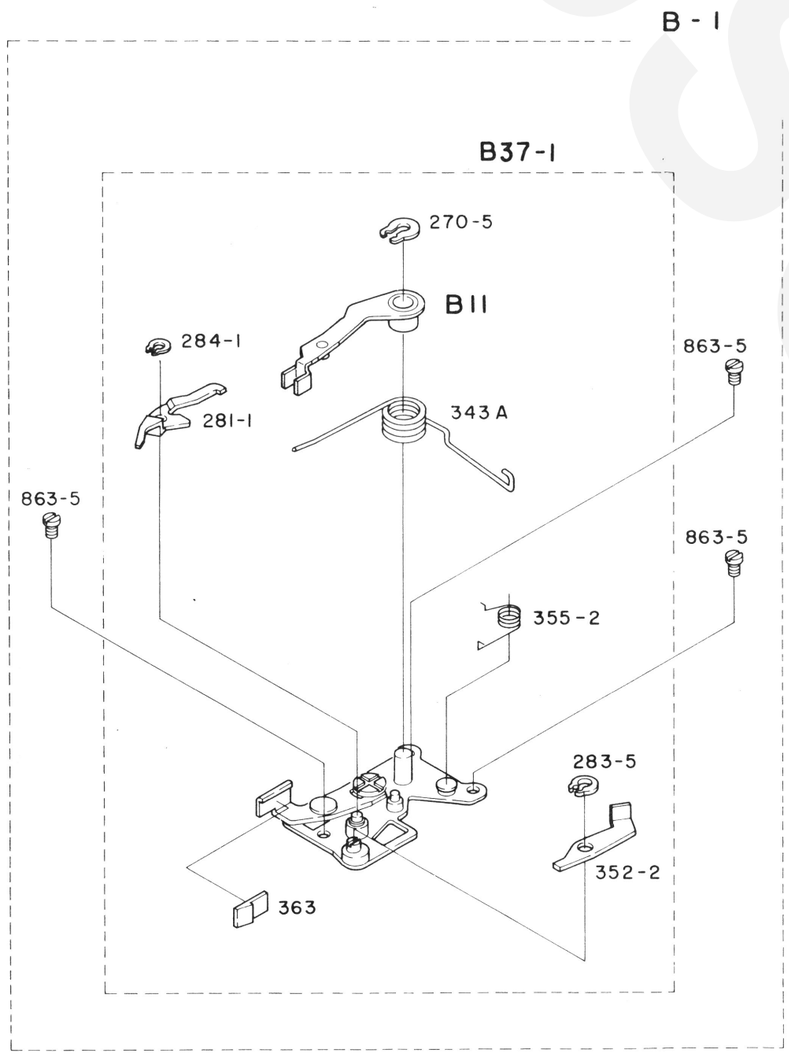

Fig.12

35FB-R.3012.A

NEW

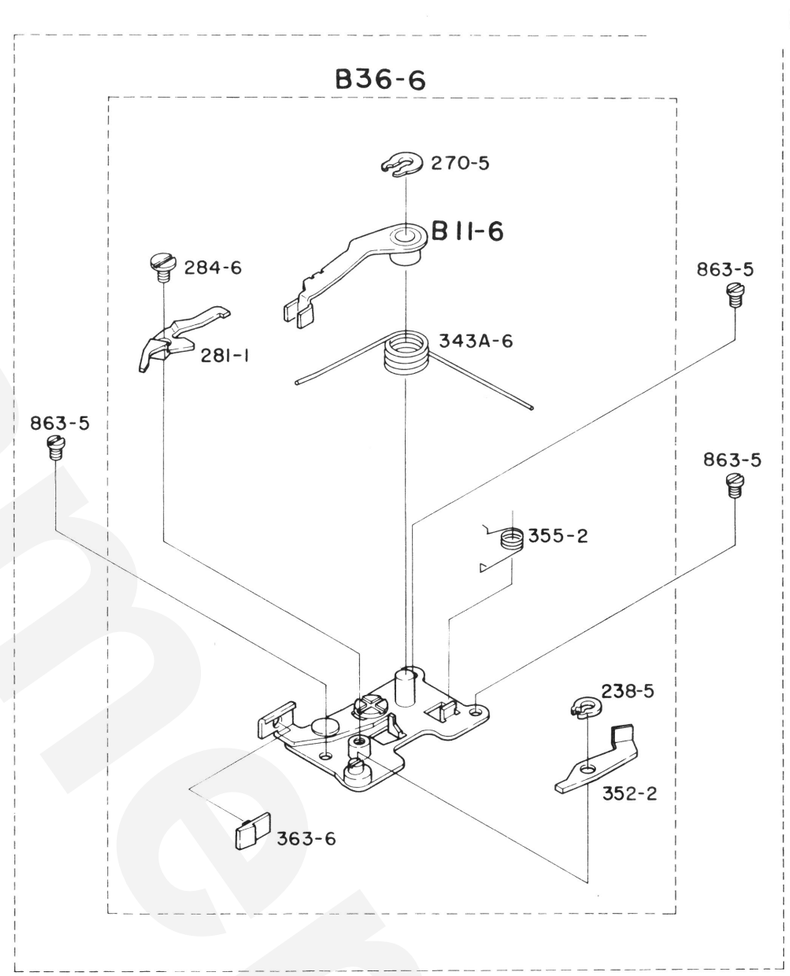

Fig.12-1

35FB-R-3012-A

部品番号 Part No.	名称 Name	備考 Remarks	部品番号 Part No.	名称 Name	備考 Remarks
35FB 284-1	G-リング G-ring		**P33FB**		
343A	ダウンバネ Mirror-down spring		270-5	グリップリング Grip-ring	
343A-6	ダウンバネ Mirror-down spring		281-1	保持レバー Retaining lever	
363	ダウンレバー緩衝ゴム Shock absorb rubber		283-5	グリップリング Grip-ring	
			284-6	ブレーキ解除軸ビス Brake release shaft screw	
B11	大レバー Large lever		352-2	MD巻上げ信号中間レバー MD take-up signal middle lever	
B37-1	ブレーキ部組 Shutter brake		355-2	保持レバーバネ Spring	
B-1	前板 Front plate				
B-5	前板 Front plate		363-6	ダウンレバー緩衝ゴム Shock absorb rubber	
B36-6	底基板 Bottom base plate		863-5	M. boxト基板ビス Screw	
			B11-6	大レバー Mirror charge lever	

Camera

ボディ Body

35FB-R.3012.A

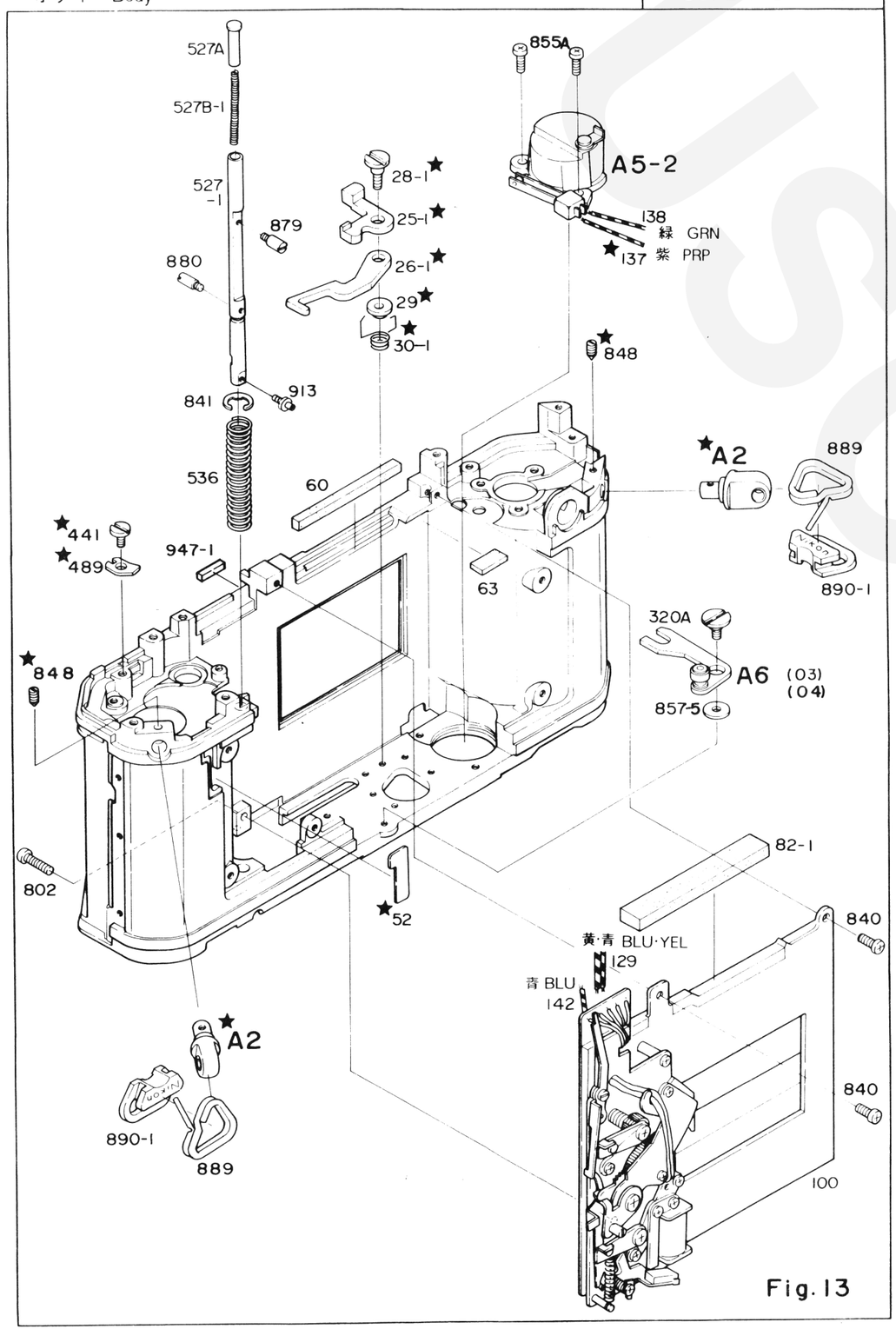

Fig.13

ボディ Body

35FB-R.3012.A

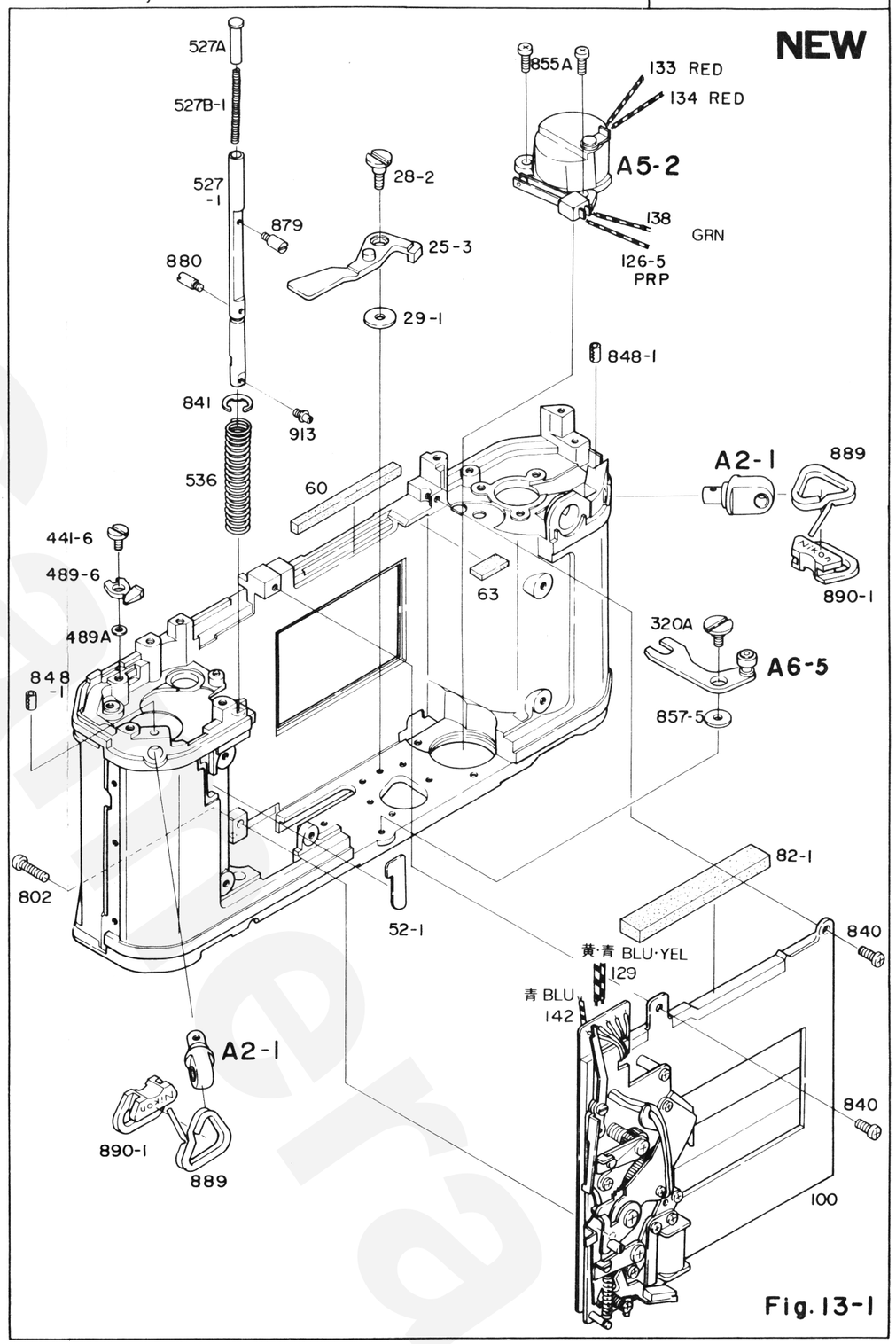

Fig.13-1

部品番号 Part No.	名称 Name	備考 Remarks
35FB 100	シャッター Shutter	
129	トリガスイッチコード Lead wire, trigger switch	
137	後幕シグナルコードB Lead wire B, second curtain signal	
138	後幕シグナルコードA Lead wire A, second curtain signal	
142	シンクロコードA Lead wire A, synch	
527-1	レリーズ軸 Shutter release shaft	
880	Bレバー解除ビス B-lever release screw	
★947-1	シャッター後遮光ゴム Light tight	
★ 52	コード溝カバー Cord groove cover	
52-1	コード溝カバー Cord groove cover	
133	プラスコードA Lead wire A	
134	プラスコードB Lead wire B	
P33FB		
P33FB ★ 25-1	MD・SW 連動レバー Motor switch coupling lever	
25-3	MD・SW 連動レバー Motor switch coupling lever	
★ 26-1	空撮り防止レバー Blank exposure preventer lever	
★ 28-1	MD信号レバー軸 MD signal lever axle	
28-2	MD信号レバー軸 MD signal lever axle	
★ 29	空撮り防止レバー軸カラー Blank exposure preventer lever collar	
29-1	MD信号レバー座金 MD signal lever washer	

部品番号 Part No.	名称 Name	備考 Remarks
P33FB ★ 30-1	MD信号レバーバネ MD signal lever spring	
60	接眼下部遮光モルト Light-tight (for eyepiece)	
63	シャッター羽根受けゴム Shutter curtain rubber	
82-1	シャッター上遮光モルト Light-tight, shutter top	
126-5	上地スイッチコード Switch cord	
320A	チャージレバー軸 Charge lever axle	
441	三羽根爪外しレバー軸 Charge cam claw release lever axle	
441-6	面カム外しレバー軸 Clutch cam release lever axle	
489	三羽根爪外しレバー Charge cam claw release lever	
489-6	面カム外しレバー Clutch cam release lever	
489A	面カム外しレバー座金 Washer	
527A	レリーズ軸補助 Release shaft supporter	
527B-1	レリーズ釦補助バネ Spring	
536	レリーズ軸バネ Release shaft spring	
802	小ねじ JCIS ⊕ PM 1.7x3 Type (1) screw	
840	シャッター取付ねじB Shutter attaching screw B	
841	レリーズ軸用Eリング Release shaft E ring	
848	吊り環ビス Eyelet set screw	
848-1	スプリングピン Spring pin	
855A	小ねじ JCIS ⊕ CM 2.0x4.5 Type (3) Screw	

部品番号 Part No.	名称 Name	備考 Remarks
P33FB 857-5	大レバー座金 Washer	
879	レリーズレバーガイド Release lever guide pin	
889	三角環 Neck-strap ring	
890-1	三角環保護カバー Neck-strap ring cover	
913	レリーズ連結ねじ Release shaft connecting screw	
A2	耳環 Eyelet	
A2-1	耳環 Eyelet	
A5-2	電池ケース Battery chamber	
A6-5	チャージレバー Charge lever	

部品番号 Part No.	名称 Name	備考 Remarks
35FB 947-1	シャッター後遮光ゴム Light tight	

ボディ底部　Body, Bottom

35FB-R.3012.A

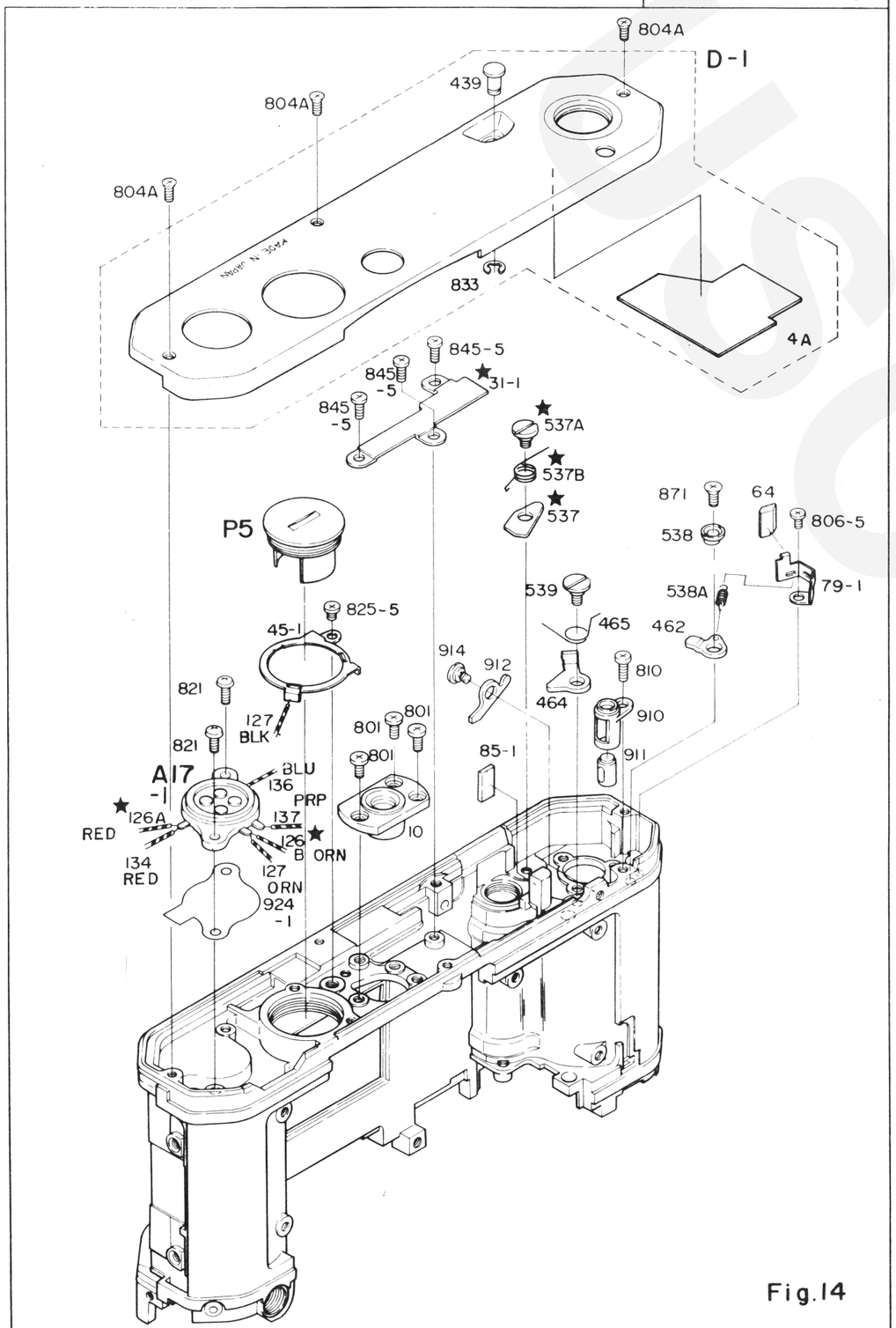

Fig.14

ボディ底部　Body, Bottom

35FB-R.3012.A

NEW

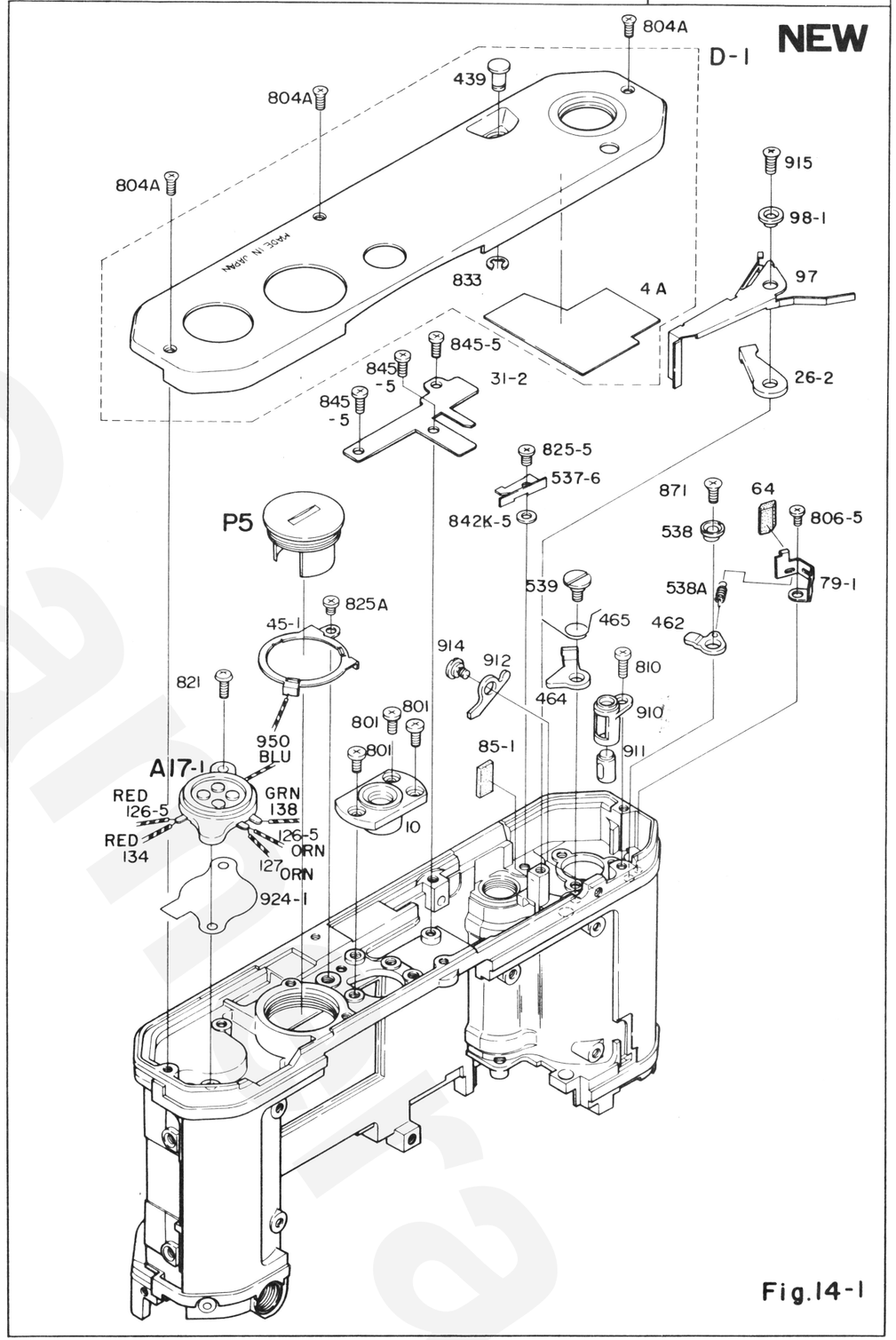

Fig.14-1

部品番号 Part No.	名称 Name	備考 Remarks
35FB 79-1	緩衝板 Shock absorb plate	
126A	レバースイッチコード Lead wire, lever switch	
126B	レバースイッチコード Lead wire, lever switch	
127	電源コード Lead wire, power source	
134	プラスコードB Lead wire B	
136	MDスイッチコード Lead wire, MD switch	
137	後幕シグナルコードB Lead wire B	
806-5	小ねじ JCIS ⊕ PM 1.7x1.8 Type (1) screw	
P33FB		
P33FB 4A	底蓋遮光シート Bottom light baffle	
10	三脚座 Tripod socket	
26-2	空撮り防止レバー Blank exposure preventer lever	
☆31-1	底部押え板 Retaining plate, bottom	
31-2	底部押え板 Retaining plate, bottom	
45-1	電池アース接片 Battery chamber earth contact	
64	緩衝ゴム Shock absorb rubber A	
85-1	シャッターチャージレバー受ゴム Charge lever base rubber	
97-1	空撮り防止作動バネ Blank exposure preventer spring	

部品番号 Part No.	名称 Name	備考 Remarks
P33FB 98-1	空撮り防止作動バネ Blank exposure preventer lever axle	
126-5	上地スイッチコード Switch cord	
439	巻戻釦 Rewind button	
462	振り子 Pendulum	
464	ロックレバー Lock lever	
465	ロックレバーバネ Lock lever spring	
☆537	AR レバー AR lever	
537-6	AR レバー AR lever	
☆537A	AR レバー軸 AR lever axle	
☆537B	AR レバーバネ AR lever spring	
538	振り子偏心軸 Pendulum eccentric axle	
538A	振り子バネ Pendulum spring	
539	ロックレバー軸 Lock lever axle	
801	小ねじ JCIS ⊕ PM 2x3 Type (3) screw	
804A	小ねじ JCIS ⊕ CM 1.7x2.5 Type (1) screw	
810	前板取付ビス Front plate screw	
821	小ねじ JCIS ⊕ PM 2x4 Type (3) screw	
825-5	小ねじ JCIS ⊕ PM 2.0x2.5 Type (1) screw	
825A	小ねじ JCIS ⊕ PM 2.0x2.5 Type (3) screw	
833-1	ゆるみ止めビス Set screw	

部品番号 Part No.	名称 Name	備考 Remarks
P33FB 842K-5	調整座金 Washer	
845-5	小ねじ JCIS ⊕ CM 2.0x3.0 Type (1) screw	
871	振り子偏心軸ビス Eccentric screw	
883	E リング E-ring	
910	MD 軸受 MD shaft bearing	
911	MD 軸 MD shaft	
912	MD シーソーレバー MD see-saw lever	
914	MD シーソーレバー軸 See-saw lever axle	
915	小ねじ JCIS + CM 2.0x4.5 Type (1) screw	
924-1	絶縁シート Insulating seat	
950	MD アースコード MD earth cord	
A17-1	MD 外部接点 MD electrical contact	
D-1 (01)(02)	底蓋 Bottom plate	
P5	電池キャップ Battery chamber	

部品番号 Part No.	名称 Name	備考 Remarks

NEW

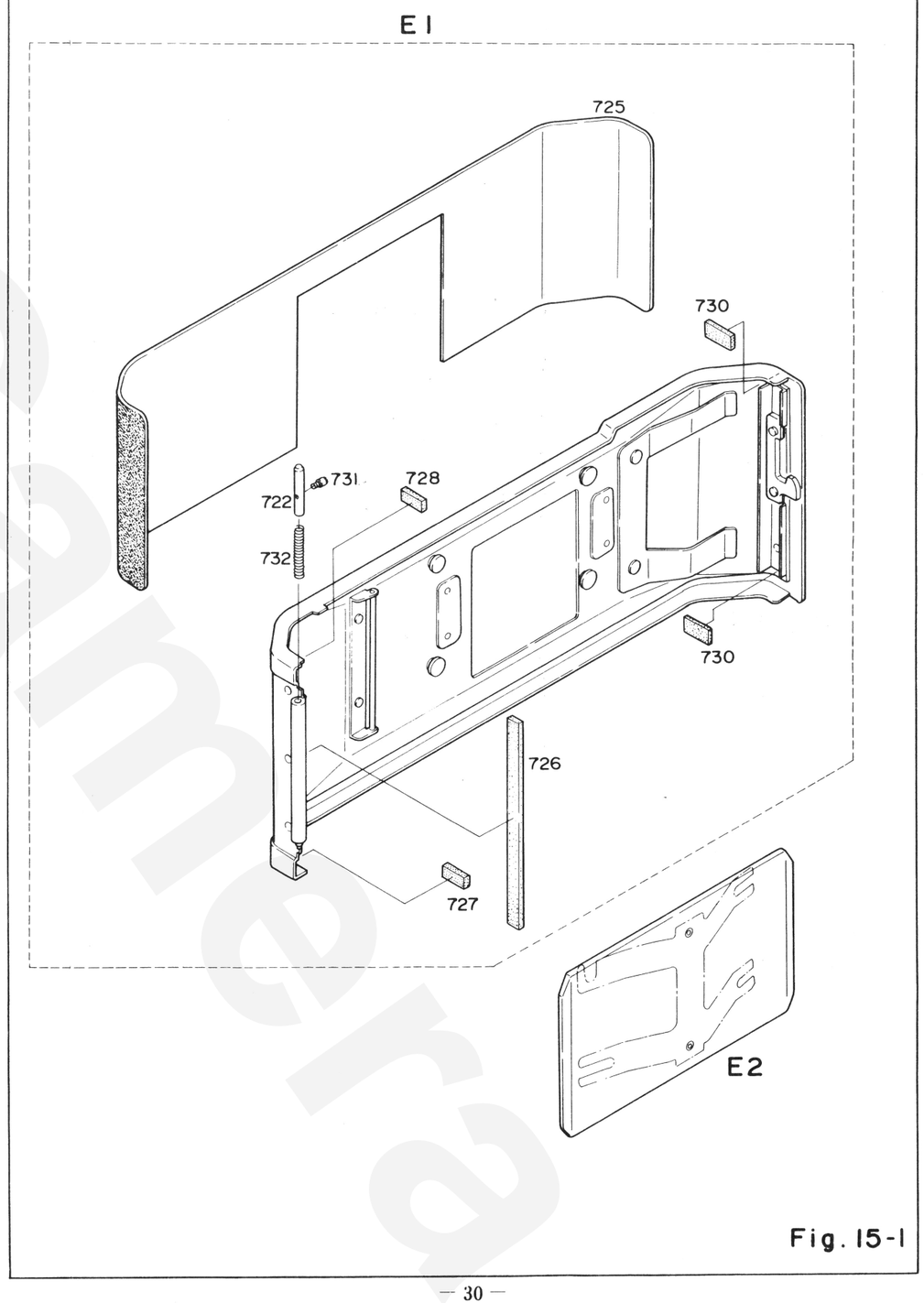

Fig. 15-1

UsCamera

部品番号 Part No.	名称 Name	備考 Remarks	部品番号 Part No.	名称 Name	備考 Remarks
35FB					
P33FB					
P33FB 722	蝶番芯金 Hinge shaft B				
725	裏蓋用貼皮 Back cover leatherette				
726	遮光モルトA Light-tight A				
727	遮光モルトB Light-tight B				
728	遮光モルトC Light-tight C				
730	遮光別珍 Light-baffle cloth B				
731	裏蓋着脱ピン Camera back release pin				
732	裏蓋着脱バネ Camera back release ring				
E1	裏蓋 Camera back				
E2	圧板 Pressure plate				

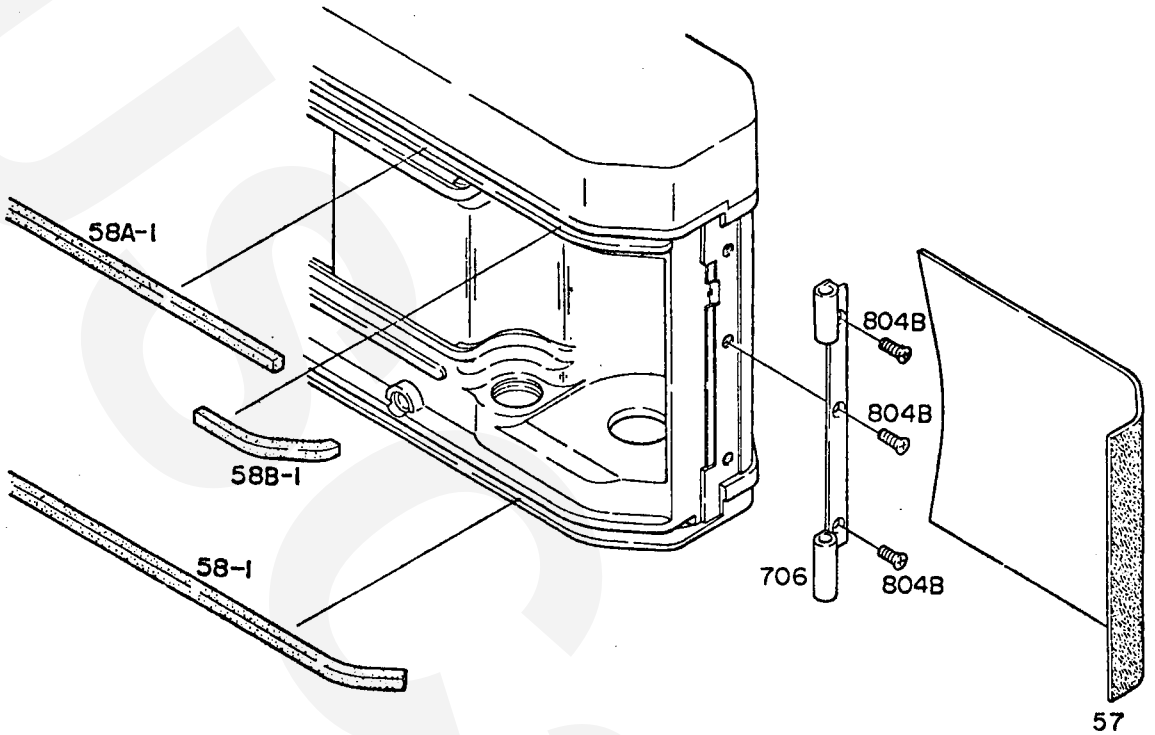

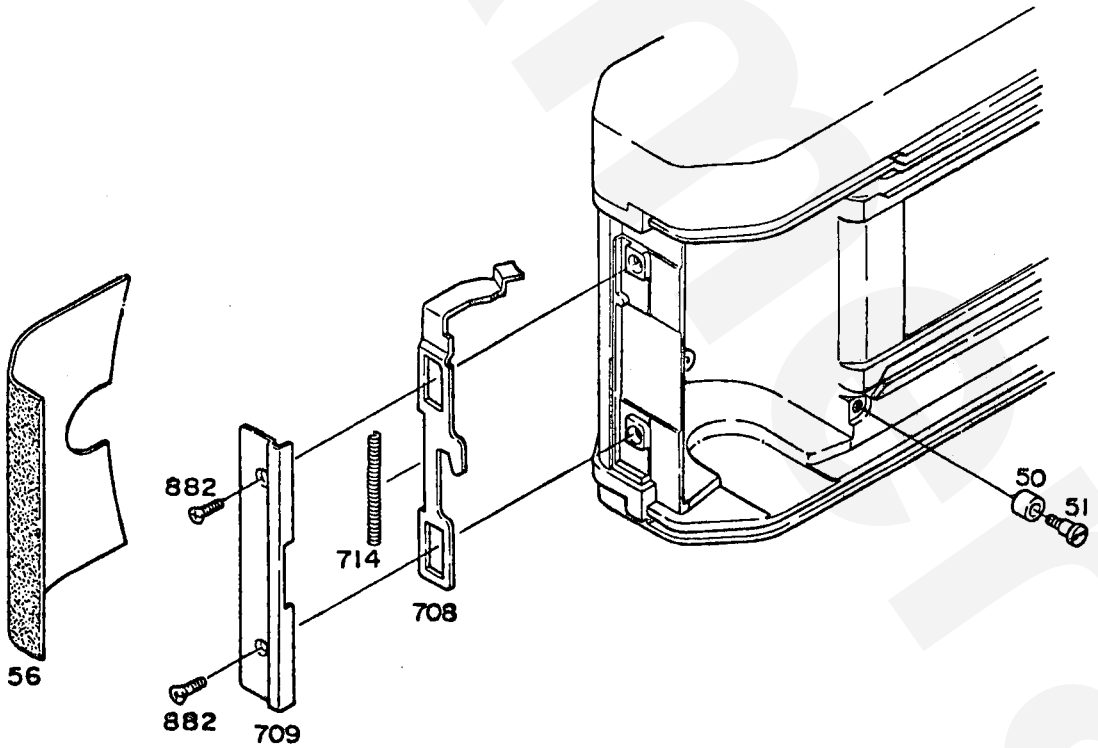

Fig. 16-1

部品番号 Part No.	名称 Name	備考 Remarks	部品番号 Part No.	名称 Name	備考 Remarks
35FB 56	ボディ擬革A Vinyl leatherette A				
57	ボディ擬革B Vinyl leatherette B				
706	裏蓋蝶番A Camera back hinge A				
708	止め爪B Latch B				
P33FB					
P33FB 50	ローラー Roller				
51	ローラー軸 Roller shaft				
58-1	溝用モルトプレン Light-tight (for groove)				
58A-1	上溝用モルトプレンA Light-tight A				
58B-1	上溝用モルトプレンB Light-tight B				
709	止め爪カバー Latch cover				
714	止め爪バネ Latch spring				
804B	小ねじ JCIS + CM 1.7x2.5 Type (1) screw				
882	小ねじ JCIS + CM 1.7x3 Type (1) screw				

Section IV. Disassembly, Assembly & Adjustment

Content

REPAIRING PROCEDURES FOR THE FE'S SHUTTER BRAKE MECHANISM TROUBLE

The following information is provided to guide servicing organizations in checking/solving the FE's shutter brake trouble. Technical Information Nos. FM-780060 and FM-780063 should be also referred.

Classification of Trouble

The trouble may be classified as follows:

Classification No.	Condition of Trouble	Checking Point	Page
1	Mirror-down position. Rear curtain released.	Reflex-mirror should not rise up when the release button is depressed.	1 - 4
2	Mirror-down position. Front curtain cocked.	Mirror-down lever should not be charged. (When checking, remove bottom cover.)	5 - 6
3	Reflex-mirror locked-up. Rear curtain released.	Front curtain should not be cocked.	6 - 8

Note: The above list is only applicable to the trouble caused by the malfunctional shutter brake mechanism or mishandling. Thus as for other causes and solutions to inoperative film-advance lever, refer to mechanical troubleshooting table in the repair manual.

Classification No. 1

The trouble is prone to happen with the camera bodies which are NOT incorporated new double-exposure preventing mechanism (T. I. No. FM-790007). The trouble is ascribed only to the malfunctional shutter brake mechanism. When checking, remove both bottom cover and tripod socket, then identify the type of shutter brake assembly. In case of motor-drive link-up operation, all camera bodies are applicable.

Camera body incorporated former shutter brake assembly

Replace former shutter brake assembly with new one. Prior to installing new assembly, be sure to check both retaining lever #281-1 and MD take-up signal middle lever #352-2, free from excessive tilting play.

(1) Height of diaphragm actuating lever adjustment

↓ Check the balance between the height before shutter-cocking and the height after shutter-cocking.

Balance to be more than 0.2mm

N.K.K. J-434 A4 F-2 2000 H

② Mirror-down signal lever positioning

Set the mirror-box in the cocked condition. Provide 0 - 0.1mm clearance between mirror-down signal lever #288 and stopper #878 by installing either #878A or #878B when mirror-down lever #323 is deeply engaged with mirror-down latch lever #330. (See figure 1)

Fig. 1

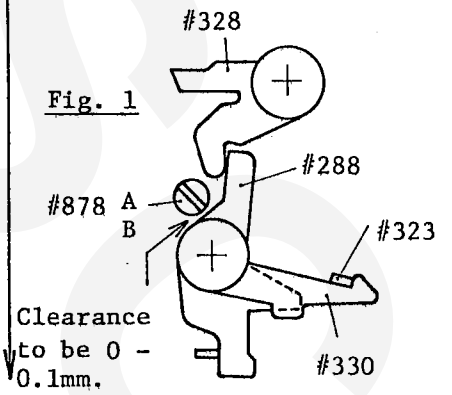

Fig. 2

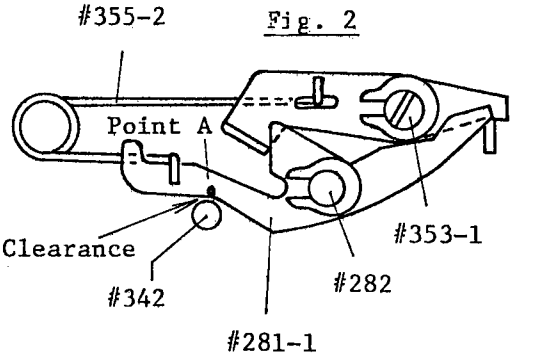

③ Click getting-over timing (T. I. No. FM-780063) adjustment

Rotate axle #353-1 clockwise/counterclockwise to provide a slight clearance between retaining lever #281-1 and lever stopper #342, then reverse #353-1 until no clearance is obtained between #281-1 and #342. (See fig. 2)

Check click getting-over timing to be nearly zero (0).

④ "Dimension 28.1mm" adjustment

First, delete "Dimension 28.3mm" in our T. I. No. FM-780060 on page 7/8 and apply "Dimension 28.1mm" instead.

Under the same condition mentioned in T. I. No. FM-780060:

Standard to be $28.1 \begin{smallmatrix} +0.2\text{mm} \\ -0.1\text{mm} \end{smallmatrix}$

Checking and adjustment procedures are completely the same.

When using J15160, refer to fig. 3

Fig. 3

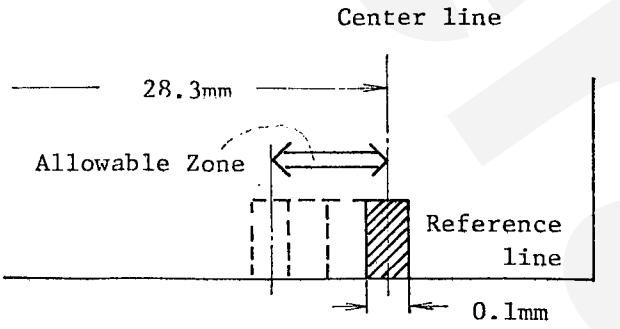

J15160 (Partially-enlarged)

N.K.K. J-434 A4 H 2000 H

⑤ Middle lever disengaging power adjustment

a) Apply grease G8181 to contact surfaces between #352-2 and #281-1, also between spring #355-2 and #281-1.

b) Decrease the disengaging power by bending spring #355-2 to 60 - 70g.

Note: Disengaging power to be 50g minimum. Otherwise, malfunctional MD rear-curtain switch may result.

⑥ Front plate installation

It may be difficult to install front plate into body die-casting after adjusting "Dimension 28.1mm". For easy installation, follow the following step.

As illustrated, hook the thread onto signal lever #328. Then pushing the lever downward with the thread, install front plate into body die-casting. After installation, pull out the thread.

Fig. 4

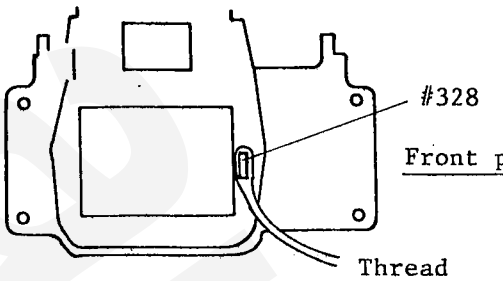

Front plate (Back View)

Note: It is not necessary to follow the above step when installing front plate incorporated new double-exposure preventing mechanism. (Refer to repair manual Sec. IV, page 24V-a.)

⑦ Final operation check

Mount the lens and repeat shutter cocking/releasing with various camera's angles. Visually check the traveling condition of the rear curtain. That is, observe the caulking pin of the rear curtain after shutter-releasing.

Less than one-half of the caulking pin should be visible from the aperture. If the amount of caulking pin visible from the aperture varies largely at every shutter-releasing, replace shutter assembly.

N.K.K. J-434 A4 1.2 2000 K

Camera body incorporated new shutter brake

1 Retaining lever tilting play checking

Remove tripod socket and check retaining lever #281-1 for tilting play. If the play is excessive (more than 0.7mm at point A in fig. 2), remove shutter brake assembly and caulk #282 or else replace with new one (caulked or threaded one). Follow the same steps mentioned from page 1 to page 3.

2 Middle lever tilting play checking

Remove shutter-charge lever unit and check middle lever #352-2 for tilting play. If excessive play exists, replace G-ring #283-1 with new one. Then check middle lever for smooth operation, free from excessive play.

Also adjust "Click getting-over timing". "Dimension 28.1mm", and "Disengaging power".

3 Click getting-over timing

If both #281-1 and #352-2 have little play, first remove both tripod socket and shutter-charge lever, then cock the reflex-mirror and adjust the timing by rotating #353-1.

Be sure to recheck the installing position of G-ring and the play of middle lever.

4 Final operation check

Mount the lens and check the traveling condition of the rear curtain as mentioned in previous section. If the condition does not conform to the standard, repeat the above-mentioned adjustments (i.e. "Dimention 28.1mm" & "Disengaging power)

If the condition cannot be remedied, replace shutter assembly.

N.K.K. J-434 A4 ~ 2000 H

Classification No. 2

The trouble occurs under the condition that the shutter is cocked but the reflex-mirror is not cocked when the film-advance operation is performed. The main causes are traced to improper mirror-charge lever and malfunctional middle lever.

When checking, (a) remove bottom cover and make sure that mirror-down lever #323 is NOT engaged with mirror-down latch lever #330. (b) Cock the reflex-mirror by actuating mirror-down lever with driver. (c) Check to see if the trouble recurs by repeating shutter cocking/releasing with various camera's angle.

1 Mirror-down lever stroke checking

Slowly stroking the film-advance lever, check the return stroke of mirror-down lever #323. That is, mirror-down lever should slightly move backward immediately after pendulum #462 is disengaged from ratchet cam #530 until mirror-down lever engages with mirror-down latch lever.

If no return stroke is maintained, check/adjust pendulum, charge lever A6 and large lever B11 for proper operation.

2 Middle lever operational check

a) Remove front plate and cock the reflex-mirror.

b) Engage middle lever with retaining lever by actuating see-saw lever and signal lever.

c) Pushing retaining lever slowly in the direction of arrow (see fig. 5), disengage middle lever from retaining lever. Simultaneously, check to see if middle lever fails to touch mirror-down signal lever #288 owing to unsmoothness/catching.

Fig. 5

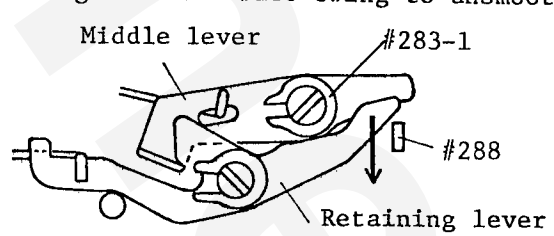

d) Apply pressure onto G ring #283-1 and disengage retaining lever from middle lever. Then check to see if middle lever moves smoothly by itself.

e) If unsmoothness/catching of middle lever may be found, replace G ring #283-1 and adjust middle lever for proper tilting play and smooth movement.

Note: If middle lever catches and fails to be disengaged from retaining lever, the mirror fails to be cocked, because middle lever fails to push mirror-down signal lever and mirror-down latch lever upward and thus mirror-down latch lever fails to be engaged with mirror-down lever.

N.K.K. J-434 A4 1~2000 H

③ Click getting-over timing adjustment

↓

④ "Dimension 28.1mm" adjustment

↓

⑤ Final operational check

With various shooting angles, gently stroke the film-advance lever and check the operation free from failure to cock the mirror. Gentle film-advance operation is recommendable.

Classification No. 3

The condition of trouble is that the reflex-mirror is locked-up at film-advance operation and thus the shutter will be released while the film-advance lever is returned to its original position.

If the shutter-speed dial is set to "Auto" or any one of 1/1000 to 8 sec., the movement of the rear curtain is controlled by the magnet and thus the shutter is released when the film-advance lever is restored. In this case, the rear curtain travels in accordance with the return action of the film-advance lever. That is, if the film-advance lever is gradually returned, the rear curtain also travels at the same speed of the rear curtain.

under these conditions, the power of shutter second release lever required to strike front plate signal lever becomes weak and thus the reflex-mirror fails to be engaged with retaining lever, thereby resulting in the trouble.

However, in case of either "M90" or "B" setting, the rear curtain is mechanically controlled and thus the traveling speed of the rear curtain is fixed when the film-advance lever is restored and no problems occur accordingly. This trouble is applicable to all cameras manufactured so far.

Recurrence of trouble

To remedy the troubled camera temporarily (i.e. to let the reflex-mirror down and engage middle lever with retaining lever in place), push up the rear curtain with a stick or something, then check to see if the trouble recurs by repeating gentle shutter cocking/releasing with various shooting angles.

Should the trouble occur, check/adjust the height of diaphragm actuating lever and mirror-up stop lever #329 for proper operation.

Unless the trouble recur, the trouble is ascribed to the user's mishandling; the shutter is released while the depth-of-preview lever is depressed half-way. In this case, perform item ①, ⑥, ⑦, and ⑧ subsequent.

N.K.K. J-A34 A4 T-2 2000 H

① Height of diaphragm actuating lever checking

Measure/check the height before shutter-cocking and the height after shutter-cocking respectively. Also check to see if the balance conforms to the standard.

Balance to be 0.2 - 0.4

If the above is not available, remove tripod socket and adjust by rotating axle #367-1 (See repair manual Sec. IV, page 23)

② Mirror-up stop lever checking

Remove front plate and check mirror-up stop lever #329 for smooth operation, free from foreign materials lodged and rubbing against the associated parts.

If malfunction does not occur, check the clearance between mirror-up stop lever #329 and mirror-up lever B12 to be approx. 0.2mm in the mirror-down position. If required clearance is not available, proceed the following:

a) Height of diaphragm actuating lever adjustment

b) Mirror-up spring #341 replacement

c) Mirror-up lever replacement

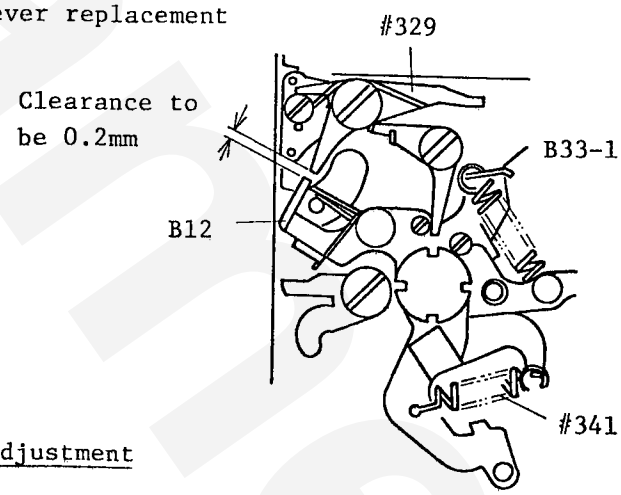

Fig. 6

③ Click getting-over timing adjustment

④ "Dimension 28.1mm" adjustment

⑤ Operational check

With various shooting angles, check to see if the reflex-mirror is locked-up at film-advance operation. Likewise, check the reflex-mirror free from locking-up while stroking the film-advance lever with depth-of-field preview lever fully depressed.

N.K.K. J-434 A4 1-2 2000 H

6 Depth-of-field preview lever operational check

a) Set the shutter-speed dial to "B" and depress the release button to lock-up the reflex-mirror.

b) Depressing the depth-of-field preview lever (B32) as far as it will go, lift up the finger from the release button to let the reflex-mirror down-position. (Note that the reflex-mirror remains halfway at this moment.)

c) Check to see if the depth-of-field preview lever jams halfway when returning the lever gradually to the original position.

This trouble is caused by the fact that manual stop-down lever B27 interferes with diaphragm spring stub B33-1. This is the same condition that the depth-of-field preview lever remains depressed halfway. Thus diaphragm spring stub cannot be restored and mirror-up lever B12 fails to be engaged with mirror-up stop lever, causing the mirror locking-up at film-advance operation.

As a solution, proceed the above step (a) and (b), then rub the mating surfaces of stop-down lever and diaphragm spring stub by repeatedly operating the depth-of-field preview lever. Repetition of these procedures will be recommendable. (For B27 and B33-1, refer to Repair Manual Sec. III, page 22)

7 Click getting-over timing adjustment

For adjustment,remove both tripod socket and shutter-charge lever unit. Then cock the reflex-mirror and rotate axle #353-1.

8 Rear curtain travel check

Check the condition of the rear curtain traveling by the same method mentioned before. If the condition does not conform to the standard, "Dimension 28.1mm" may be deficient. Thus re-check and delay the click getting-over timing.

N.K.K. J-434 A4 1-2 2000 H

Disassembling procedures chart

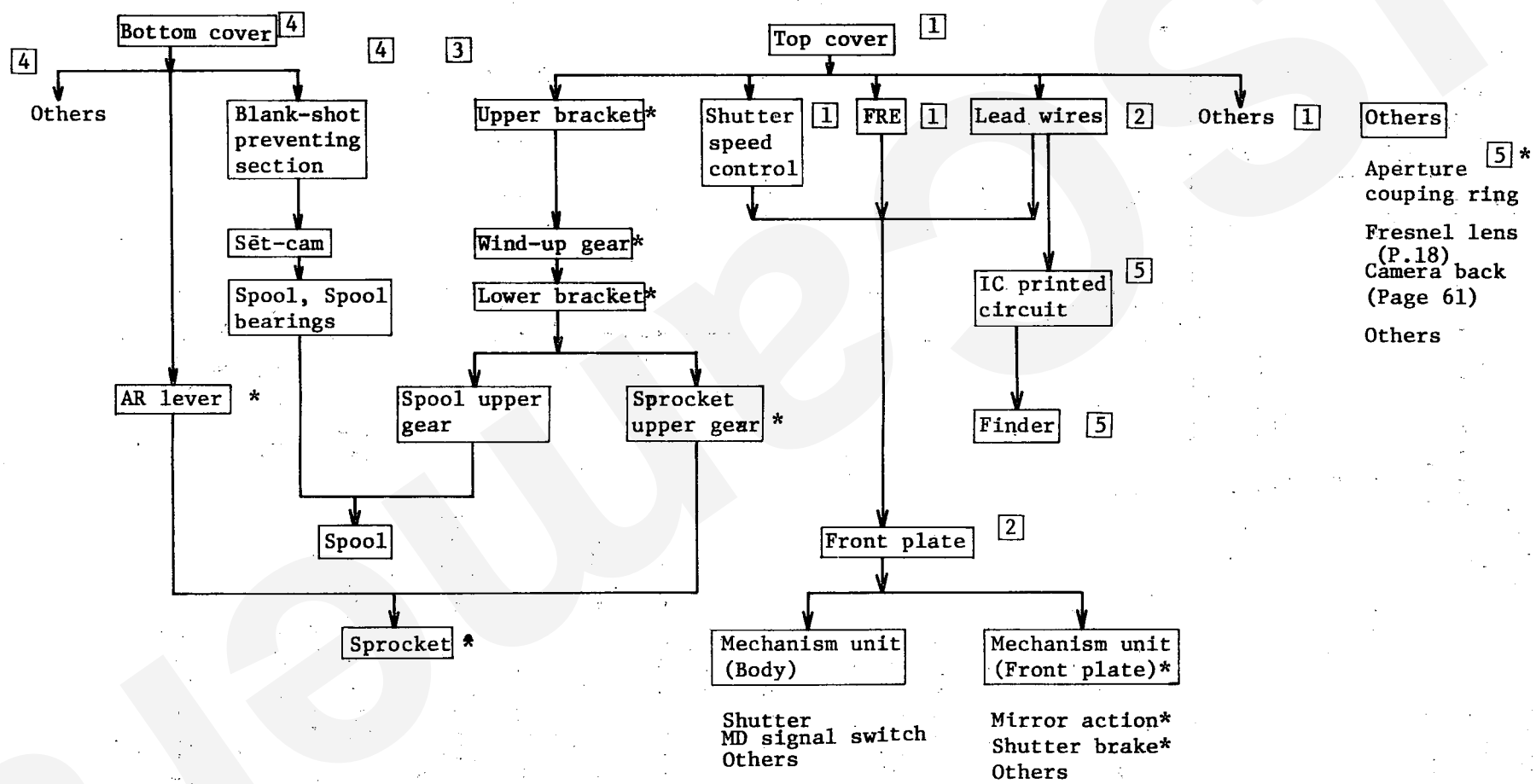

Note: * shows an unit of modification.
1 shows a section number of disassembling procedure for each unit.

Disassembling procedures [1] (Top cover)

[Wind-up lever P3-1] (P.2)
Wind-up lever leatherette #402
Wind-up lever screw #403-1

[Shutter dial P1] (P.10)
#541D x3

[Rewind knob] [1]-1
[ASA dial]

[Top cover C-6] (P.2)
⊕ #803 x5

Multi-exposure knob #491

[Release shaft supporter #527A
Spring #527B-1]
(P.26)

[Upper base plate]

[Shutter speed control]
[1]-2

[FRE]
[1]-3

[IC printed circuit]

---

[1]-1 Rewind-knob, ASA dial (P.14)

[Rewind knob #653]
(Rewind crank H1-1, Pin #666-1)

Spring #656
Washer #660
Friction spring #662

↓

[Rewind shaft #652-1]

Rewind shaft guide #665-1

↓

[Cover latch retaining clip #659]

[T] J5272

O.C. knob #664-1

↓

[Rewind knob lock lever #668]

Spring #655-1

↓

[Scale attaching ring retainer #687]

Knob lock lever shaft #689

[T] J11089

⊕ #826-1 x2

↓

[ASA dial mount #691]

⊕ #826-1 x3

[1]-2 Shutter speed control (P.10)

[Unsolder] Lead wires A #131 (blue)
(brown)
(purple)
(yellow)
Lead wires B #132 (white)
(red)
(black)

↓

[Shutter speed control R]

⊖ #898-1 x3

[N] Setting the shutter dial at B, pull up the wind-up lever side Assy R slantingly to remove R. Be careful not to scratch T-film or heedle.

[1]-3 [FRE] (P.12)

FRE F

⊕ #861-1 x3

Disassembling procedures 2 (Front plate)

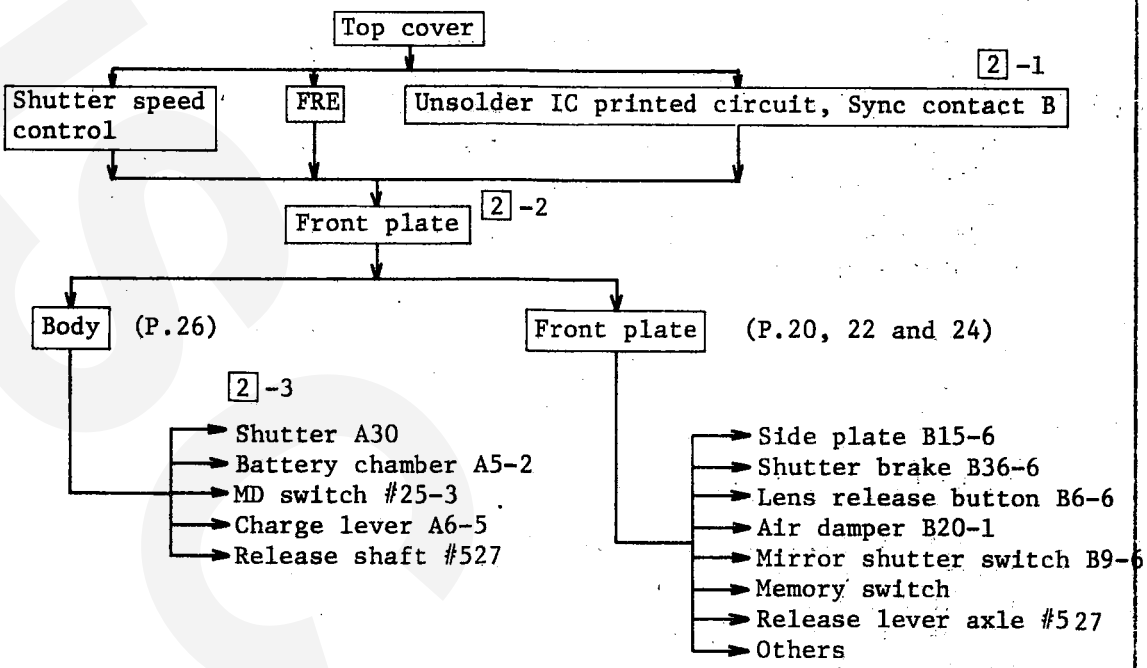

2-1 Unsolder IC printed circuit (P. 12 and 26)

FRE lead wire #130 (black)
(green)
(yellow)
(orange)
Power supply cord #127 (orange)
(black)
Trigger switch cord #129 (yellow)
(blue)
Checker lead wire #144 (purple)

Unsolder Sync contact B

Sync cord A #142 (blue)
B #143 (blue)

2-2 Front plate (P.18 and 32)

Leatherette #55
Self-timer lever screw #54
Self-timer lever B1
↓
Leatherette A #56
Leatherette B #57
↓
⊕ #810 x5
⊕ #839-1

2-3 Shutter (P.26)

Unsolder Magnet plus cord #135-6 (orange)
↓
Shutter A30 (#100)
⊕ #802
⊕ #840 x2

Disassembling procedures [3] (Upper base plate/Lower base plate)

[3]-1 Top cover

Upper base plate K-6 (P.4)

Unsolder Lever switch cord
#126-5 (red, purple and orange)
Magnet plus cord #135-6 (orange)
⊕ #845-5 x2
⊕ #845A-5 x1

Sprocket stopper spring #496-6 (P.6)
⊖ #888-1

Screw (left-handed) ⊖ #815A-5

Charge cam twisted spring #414B-5
Charge cam spring #412-6
Charge cam A13-6
Film-advance cam #413-6
Washer #897A-E
Advance gear #415-6

Sprocket stopper cam #429 (P.8)

⊖ #887 [N] #887 hsa a left-thread.

Lower base plate A11-6 (P.6)
⊕ #835 x3

Spool upper gear A7 (P.8)

Spool

Sprocket upper gear #431-6 (P.8)

Sprocket

Disassembling procedures [4] (Bottom cover)

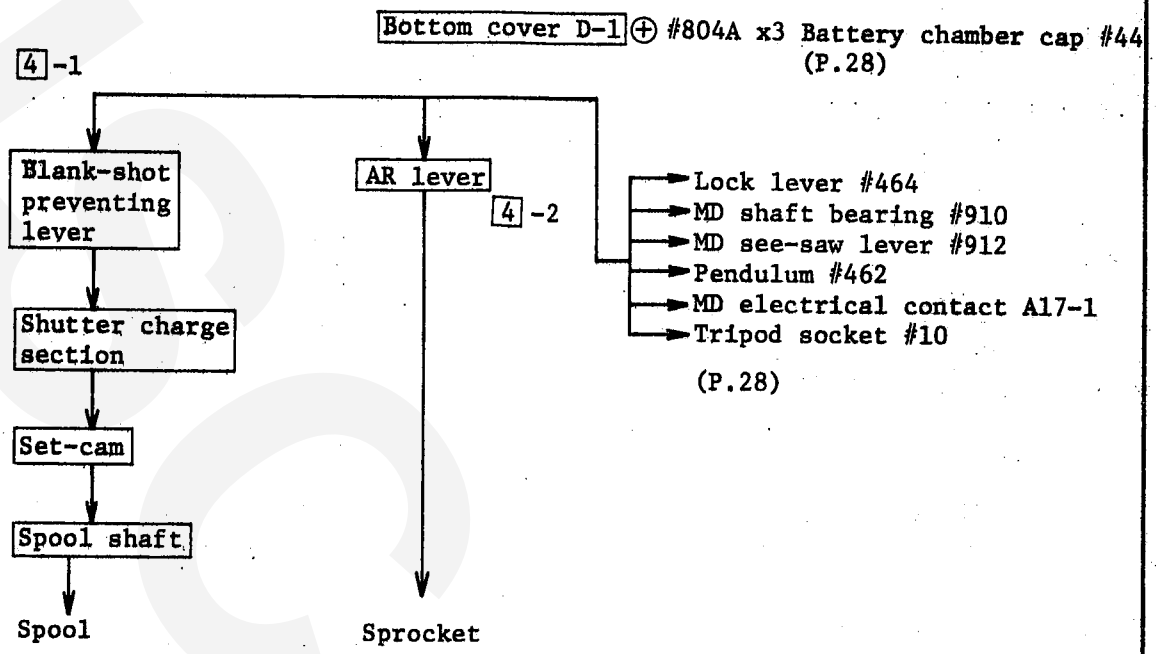

[4] -1 Blank-shot preventing lever/Set-cam

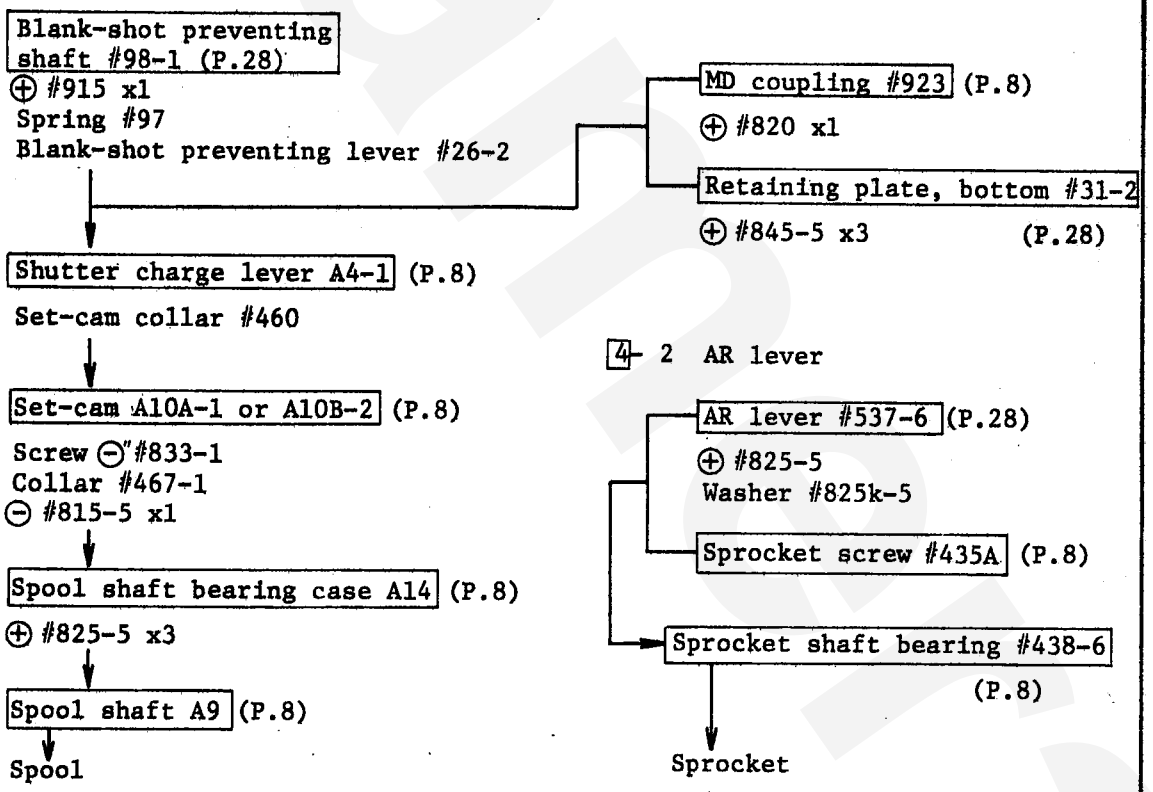

[N] To remove the sprocket, first depress Sprocket shaft #434-6 to disengage it from Sprocket shaft bearing #432-6, next tilt it to one side.

Disassembling procedures [5] (Bayonet mount, etc.)

[5]-1 Bayonet mount (P.16)

Bayonet #202-5

⊕ #805 x4

↓

Bayonet spring #208-6

↓

Aperture coupling ring B4-6

[N] Be careful not to tighten the knot of #269. Be careful for #369 not to wound into B25 after disassembling front plate. The tool stopper screw holds #269. (See Fig. 30 on Page 30.)

↓

Front cover B30-6

⊕ #813
⊖ #65-1

[5]-2 IC printed circuit /Finder (P.18)

Unsolder Mirror switch cord #140 (grey), Shutter switch cord A #128 (orange) and Shutter switch cord B #128 (pink)

↓

Prism retaining spring #233 x2
SPD printed board retainer #260
⊕ #829

↓

IC printed circuit M
Prism retaining plate #231

↓

Eyepiece mold N4
⊕ #817 x2

[N] Be careful not to drop Washer #842 A-J

↓

Prism G3

↓

Prism mask #253
Spacer #252
Finder field frame #251

↓

Prism box B39

Disassembling procedures chart

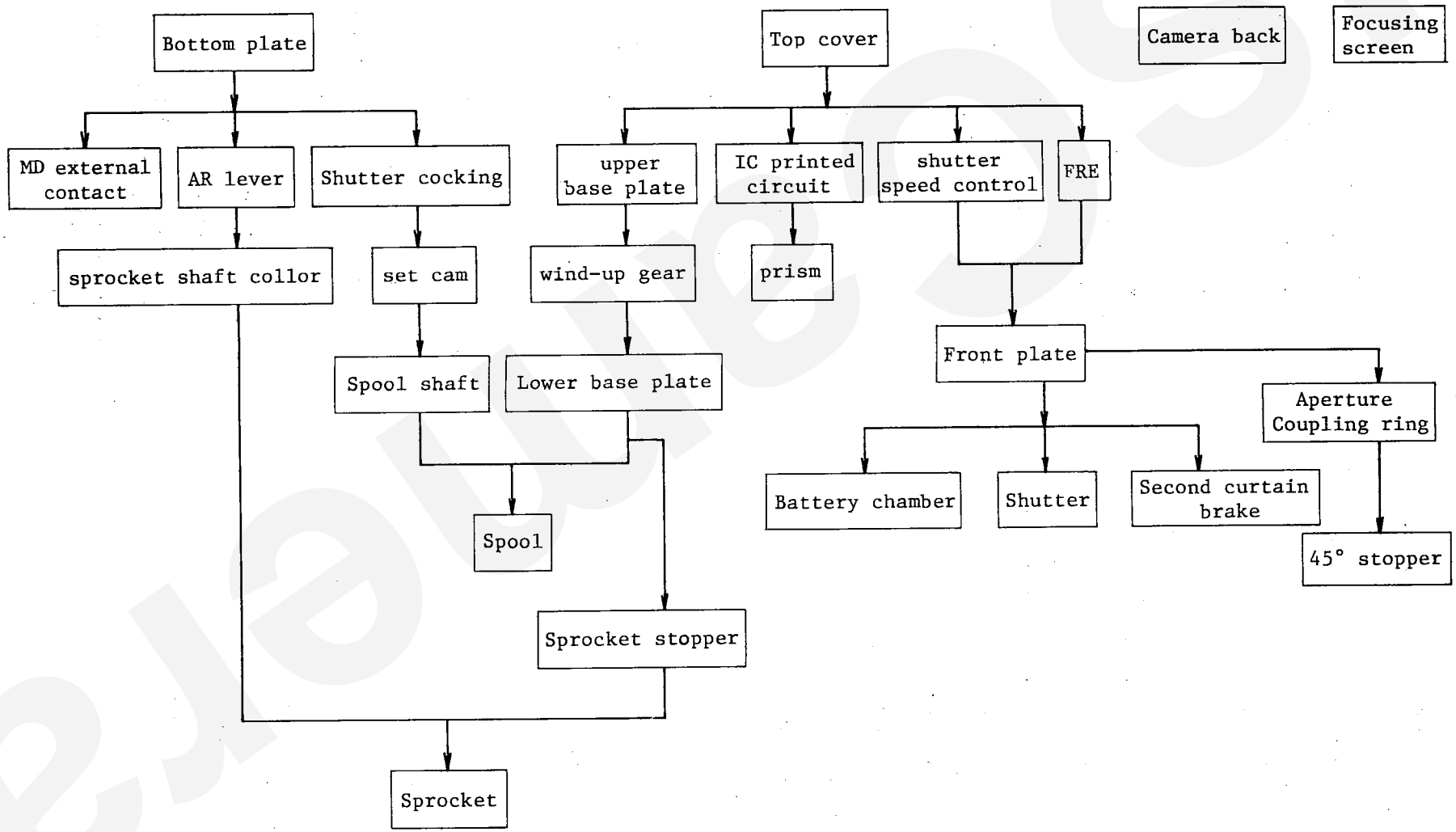

Disassembling Procedures

Top cover · Wind-up lever

Wind-up lever leatherette #402
↓
Wind-up lever screw #403
↓
Wind-up lever P3

Be careful not to drop multi-exposure knob #491

Shutter dial

Shutter dial, Screw ⊖ #541Dx3

Top Cover · Rewind crank

Rewind crank H1
↓
Spring #656
Washer #660
Friction spring #662
↓
Rewind shaft #652
↓
Rewind shaft guide #665
↓
Cover latch retaining clip #659
↓ Use special plier J5272
O.C. knob #664
↓
Rewind knob lock lever #688
↓ One end of spring #655 should be disengaged
Scale attaching ring retainer #687
Screw ⊕ #808x2,
knob lock lever shaft #689
Tool J11089

ASA dial

Top Cover (Assy C), Screw ⊕ #803x5
↓
Release middle shaft #527A
Spring #527 B-1

Bottom Cover

Battery chamber cap #44
↓
Bottom plate (Assy D), Screw ⊕ 804x3

Shutter speed control

Unsoldering lead wires
↓
lead wire on Assy R (Blue) #131
" " (Brown) "
" " (Purple) "
" " (yellow) "
" " (white)#132
meter cord on Assy R (Red)
" " (Black)
↓
Shutter speed control (R),
Screw ⊖ #893x3

Setting the shutter dial at B, pull up the wind-up lever side of Assy R slantingly to remove R. Be careful not to scratch T-film or needle.

FRE

FRE, Screw ⊕ #861x3

Front plate

Unsoldering lead wires

FRE cord #130 (Black)
" " (Green)
" " (Yellow)
" " (Orange)
Power supply cord #127 (Orange)
" " (Black)
Synch cord A #142 (Blue)
Trigger switch cord #129 (yellow)
" (Blue)
" (Green)

Shutter

Unsoldering lead wires
↓ Magnet plus cord #135 (Orange)
Shutter #100, Screw ⊕ #802
" ⊕ #840x2

Upper base plate

Unsoldering lead wires
↓ MD switch cord #136 (Blue)
Signal cord B #137 (Purple)
Switch lock lever (Assy P4)
Switch stopper spring #476
Screw ⊖ #473
↓
Upper base plate (Assy K),
Screw ⊕ #845x2

Wind-up gear, Charge cam claw release lever

Screw (left-handed) ⊖#815
↓
Sprocket stopper spring #496,
Screw ⊖ #888-1
↓
Wind-up gear A18, Advance cam #413 — To be removed together

Lower base plate

Unsoldering lead wires
↓ Lever switch cord #126 (Red)
" #126 (Orange)
Magnet plus cord #135 (Orange)
↓
Lower base plate (Assy A11)
Screw ⊕ #835x5
↓
Spool upper gear (Assy A7)

Be careful not to drop ball bearing

Spool

Motor coupling #923, Screw ⊕#820
↓
Retaining plate #31-1,
Screw ⊕ #809x3
↓
Shutter charge lever (Assy A4)
Set cam collar #460
↓
Screw #833-1, Collar #467-1
↓
Set cam (Assy A10),
Screw ⊖ #815 (left-handed)
↓
Spool shaft bearing case (Assy A14)
↓
Spool shaft (Assy A9)
↓
Spool (Assy A8)

Sprocket

Sprocket screw (left-handed) #887
↓
Sprocket stopper cam #429
Screw ⊖ #824x2
↓
Sprocket upper gear #431
↓
Sprocket shaft collor B #499-1
↓ (left-handed), Tool J11129-1
Sprocket screw A #435A
↓ Should be removed through the hole in sprocket #435 while pressing up sprocket shaft #434. Be careful not to drop #435A inside #435.
Sprocket collar A nut #437
↓ Tool J11127
Sprocket

IC printed circuit

Unsoldering lead wires
↓ Mirror switch cord #140 (Grey)
Shutter switch cord #128 (Orange)
" #128 (Pink)
↓
Prism retaining spring #233x2
↓
Eyepiece mold (Assy N4)
Screw ⊕ #817x2
↓ Be careful not to drop washer #842
Prism G3

Aperture coupling ring

Bayonet #202, Screw ⊕ #805x4
↓
Bayonet spring #208x2
(on lens-release pin side)
Screw ⊕ #806x4
↓
Coupling ring stopper #222,
Screw ⊕ #189x2
↓
Bayonet mount #201, Screw ⊕ #811x4
↓
Aperture coupling ring (Assy A4)
Thread #269

- Be careful not to tighten the knot of #269.
- Be careful for #269 not to be wound into B25 after disassembling front plate (B).

1. Sprocket Installation

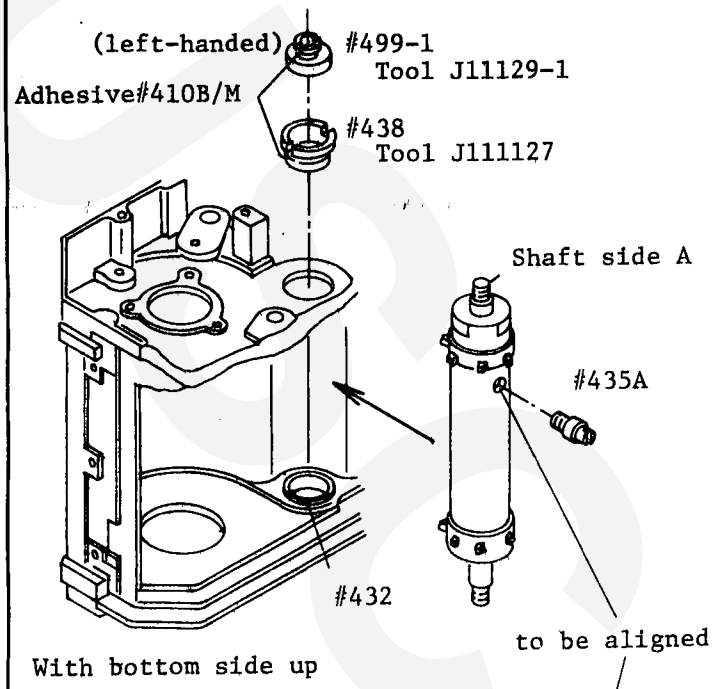

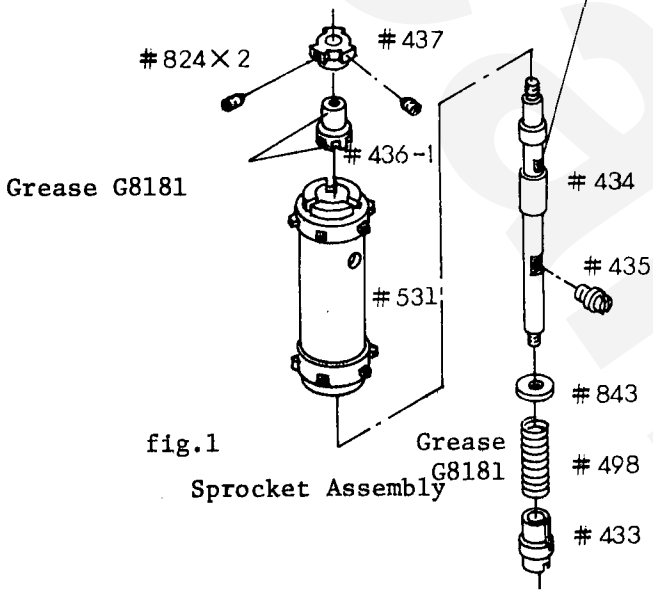

fig.1
Sprocket Assembly

Body die-casting (#1)
↓
Sprocket Assembly
- Pre-assemble the sprocket parts, referring to Figure 1 and details below.
- Insert the sprocket side A into body. Pulling up sprocket, locate opposite side into #432.

↓
Sprocket shaft bearing #438
↓
Sprocket screw #435A
- Align each hole in #531 and in #434 to properly install #435A.

↓
Sprocket shaft collar-B(#499-1)
(left-handed thread)

Sprocket Assembly

Sprocket shaft #434
↓
Washer #843
↓
Sprocket spring #498
↓
Sprocket screw #435
- Install the above parts as a unit into sprocket.

↓
Sprocket #531
↓
Sprocket collor #433
↓
Sprocket collar A #436
Sprocket collor A nut #437

Temporarily fix #437 onto #436 with two screws (#824) before mounting the unit onto #531.

For positioning of Sprocket teeth; refer to (page 9)

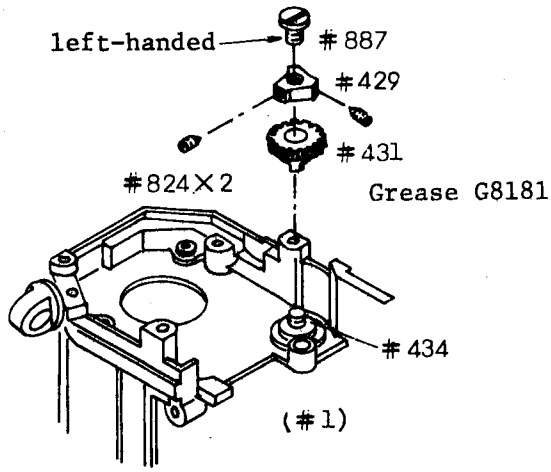

2. Sprocket upper gear and sprocket stopper cam Installation

Sprocket upper gear #431
↓
Sprocket stopper cam #429
- Screw #429 onto #434, being careful for #434 not to protrude above #429.
- For positioning of #429, refre to page 9

↓
Screw #887, left handed

1-1 Sprocket installation (Hold the camera body upside down)

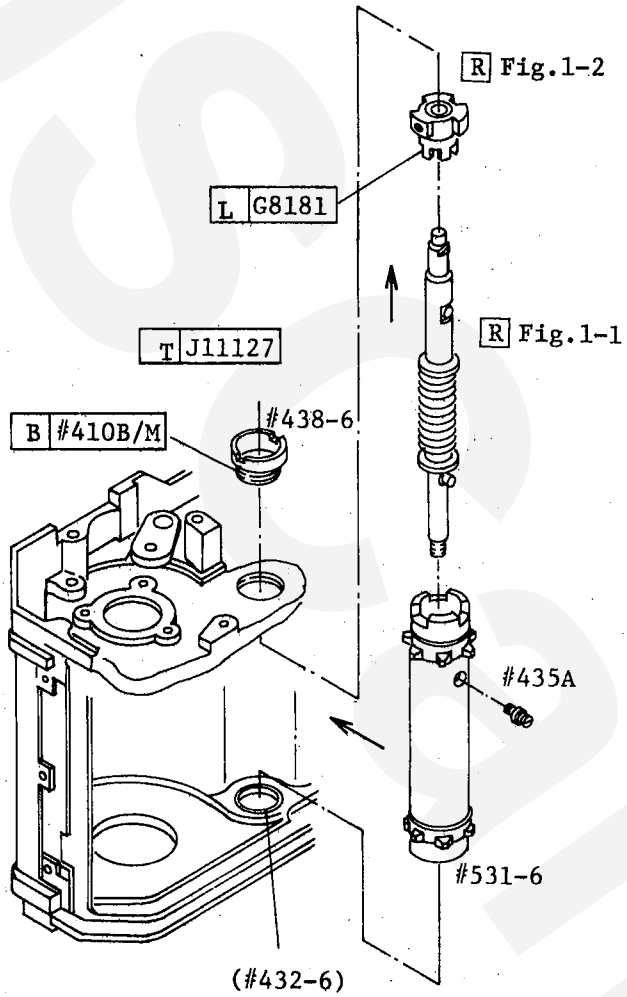

Body (#1-5)
↓
Sprocket #531-6
↓
Sprocket shaft #434-6

R Before installation of Sprocket shaft #434-6, put Spring #498 to the sprocket shaft as follows: (Fig. 1-1)

Sprocket shaft #434-6
↓
Washer #843-5
↓
Spring #498
↓
Washer #843-5
↓
Screw #435

Sprocket collar A #436-1

R Before installation of sproket collar A #436-1, put Sprocket collar A nut #437 to the sprocket collar A as follows: (Fig. 1-2)

Sprocket collar A #436-1
↓
Sprocket collar A nut #437
↓
Setscrew #824 x 2

R Temporarily tighten one of them for adjustments in the next step.

R When installing the sprocket, with the sprocket shaft inserted, to the camera body, first bring the top of sprocket close to the hole of lower plate, and then pull the head of sprocket shaft, extending through the hole so that the tail of sprocket can be dropped into Bearing #432 of the upper plate.

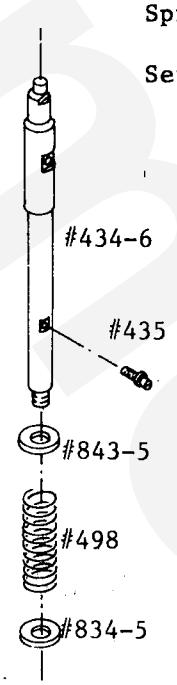

fig. 1-1

Sprocket shaft bearing #438-6
↓
N Screw Sprocket shaft bearing #438-6 into the camera body opening.

Setscrew #435A

N Screw Setscrew #435A into the hole of sprocket to fix the sprocket shaft.

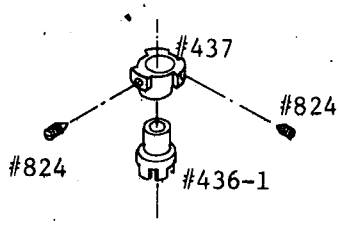

fig. 1-2

3-1 Spool installation

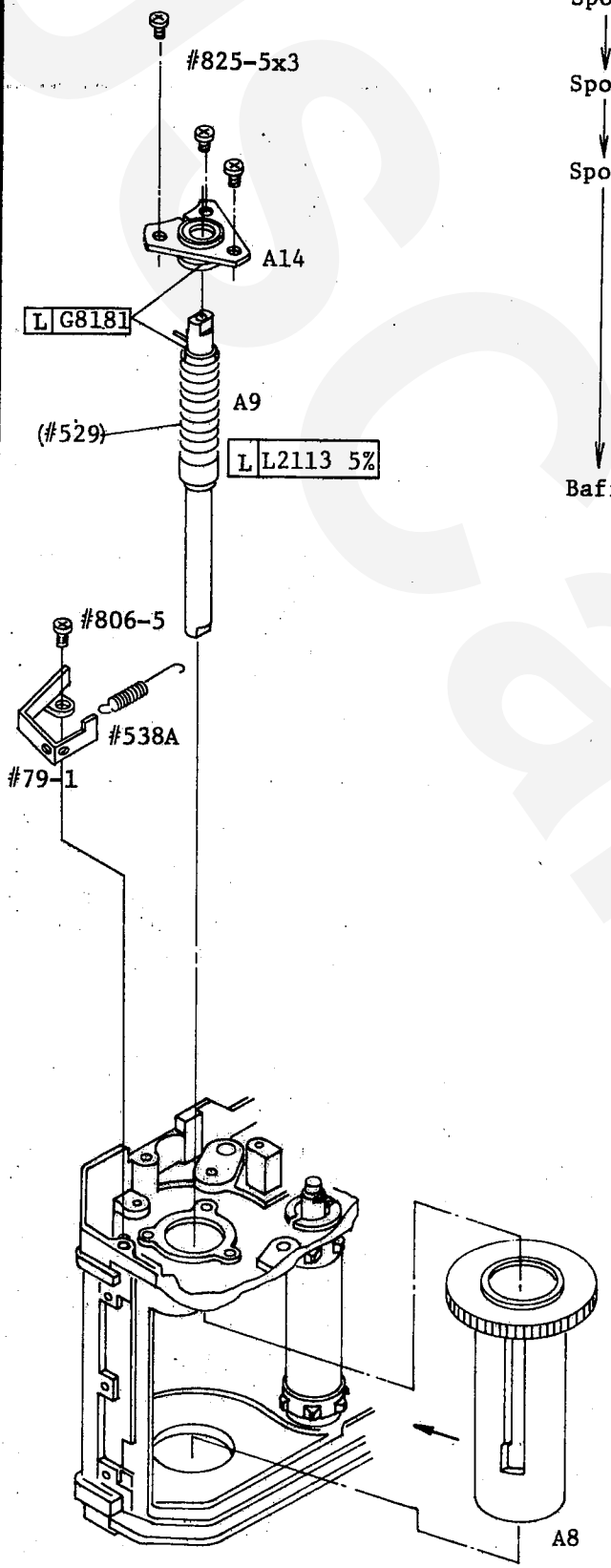

Spool A8

↓

Spool shaft A9

↓

Spool shaft bearing case A14 ⊕#825-5×3

RN After installing the spool in place, insert the top end of Spool shaft A9 into the slit of the spool shaft bearing case.

R Fig. 2-1 shows the fixed position of the bearing case with tightening three screws.

Baffle plate #79 ⊕ #806-5

R Hook the one end of Pendulum spring #538A to the baffle plate, with the plate pushed to Shock absorb rubber A #64 ⊕#825-5 x3

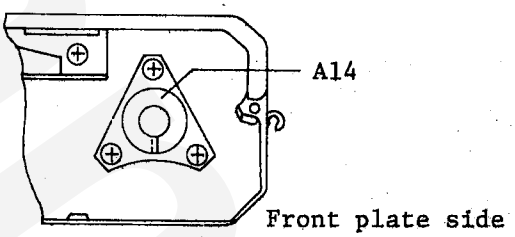

fig. 2-1

A14 installing position

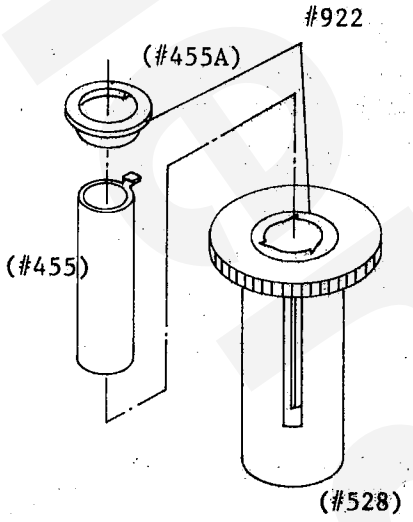

R Fig. 3-1

fig. 3-1

3-2 Lock lever installation

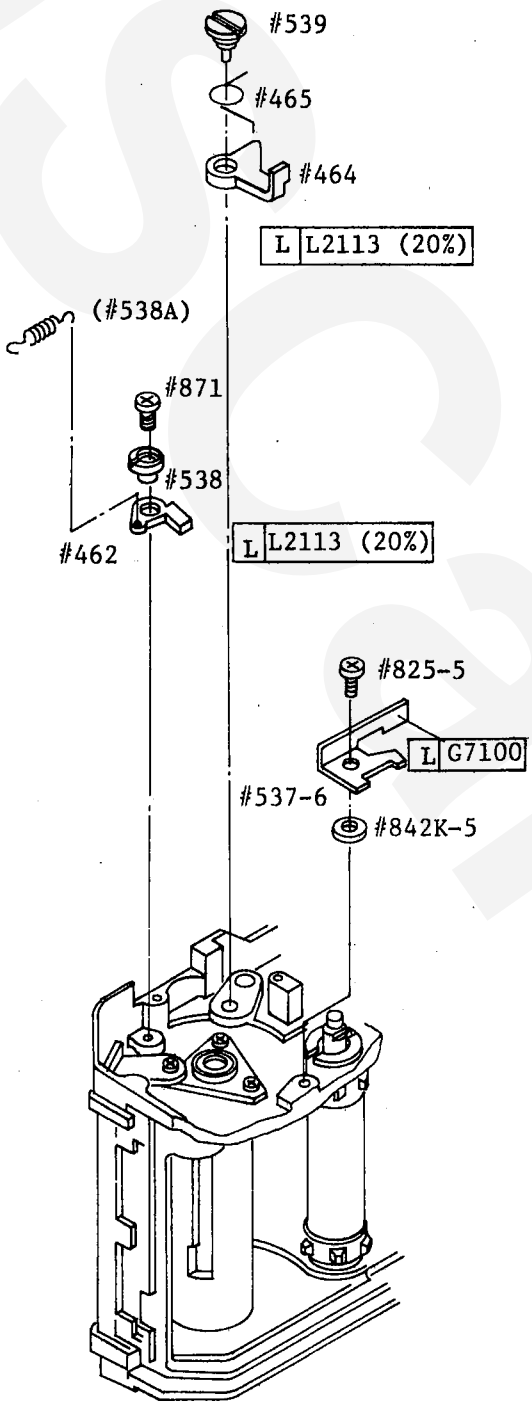

Lock lever #464
↓
Lock lever spring #465
↓
Lock lever axle #539

[R] After installation of the lock lever, hook Lock lever spring #465 to the lock lever.

3-3 Pendulum installation

Pendulum #462
↓
Pendulum eccentric axle #538
↓
Screw #871
↓
Pendulum spring #538A

[R] After installation of the pendulum, hook the other end of Pendulum spring #538A to the pendulum.

[C] Check the pendulum for smooth movement

[N] Put the pendulum to the drawn-back portion with use of the eccentricity.

3-4 AR lever installation

AR lever #537-6, Washer #842K-5, Screw #825-5

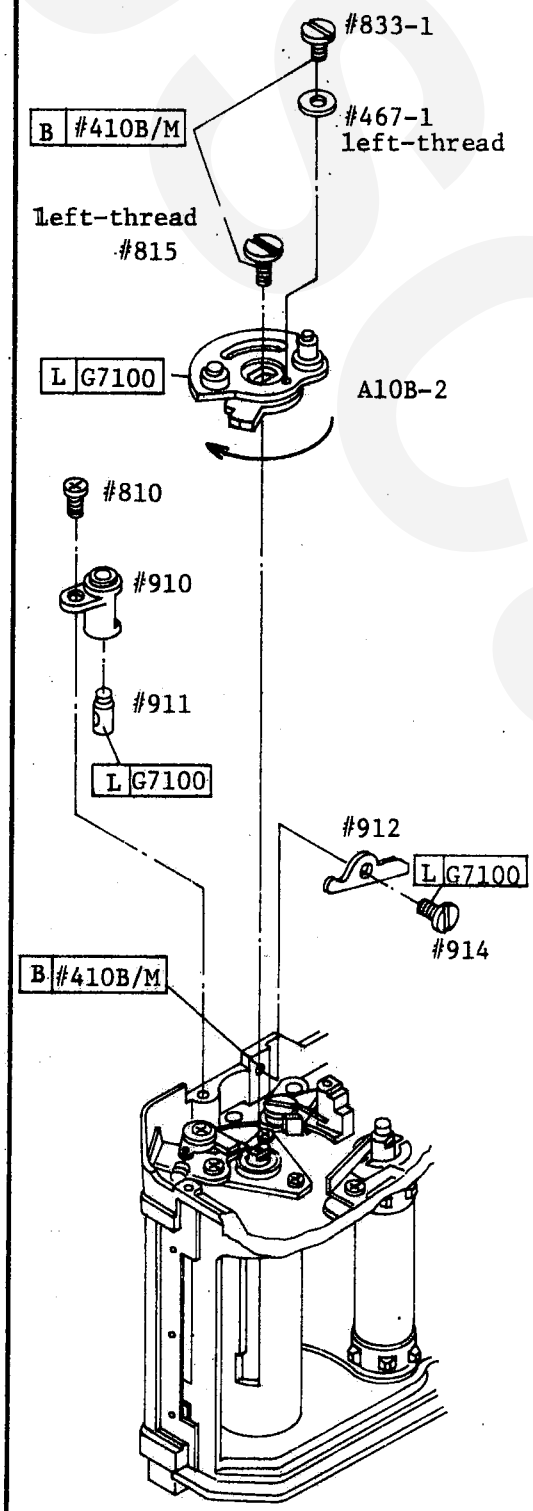

3-5 Set cam installation

Set cam A10B-2

R Wash Set cam A10B-2 to remove grease.

N At installation of the set cam, use Tool to turn Spool shaft A9 one turn clockwise.

Film-advance Shaft screw (left-handed) #815-5

N #815-5 has a left-thread.

Collar #467-1, Setscrew #833-1

N #833-1 has a left-thread.

3-6 MD shaft bearing installation

MD shaft bearing #910

R Put MD shaft #911 into MD shaft bearing #910

N Bottom plate D-1 shows the guidance for installing position of #910.

Screw #810

3-7 MD see-saw lever

MD see-saw lever #912

N Install #912 into the slot of #911

MD see-saw lever axle #914

3. Spool Installation

Body die-casting #1

↓

Spool A8

↓

Spool shaft A9

↓

Spool shaft bearing case A14

Insert the tip of #529 into the slot of A14, then secure with three screws (#825) (see figure 2)

↓

Set cam A10

Turn A9 one clockwise rotation, then install A10.

↓

Screw ⊖ #815 (left-handed) Collar (#467-1)

⊖ #833-1 (left-handed)

Make sure if Set Cam A10 properly returns

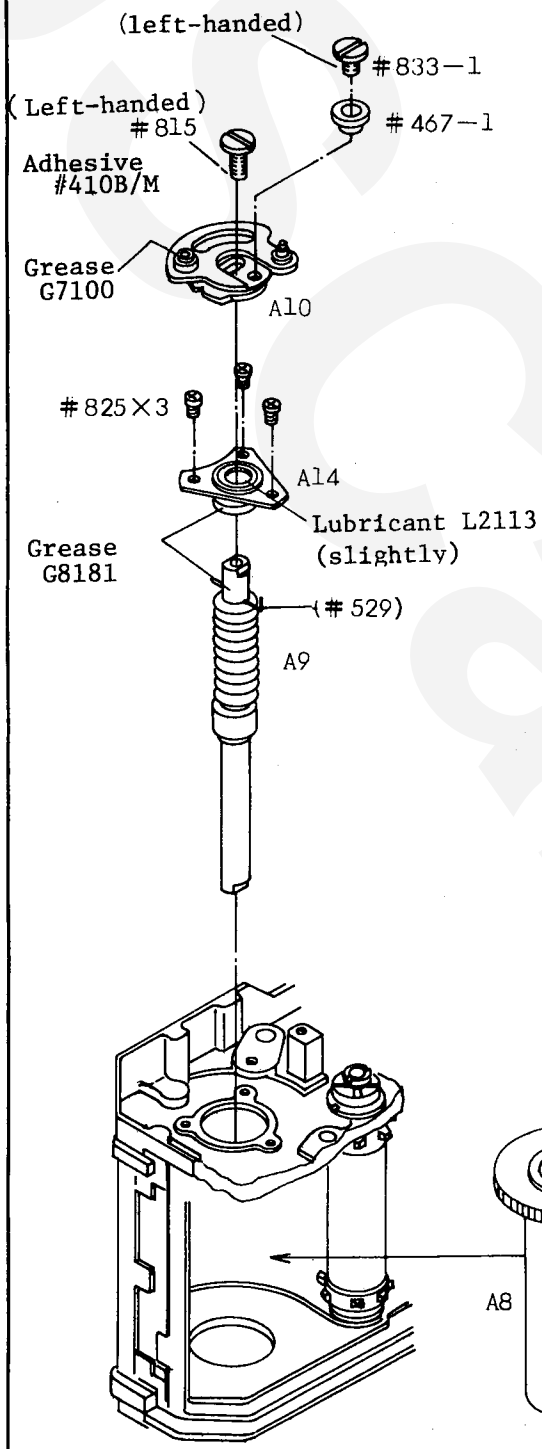

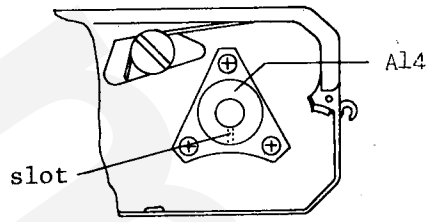

fig.2
A14 Positioning

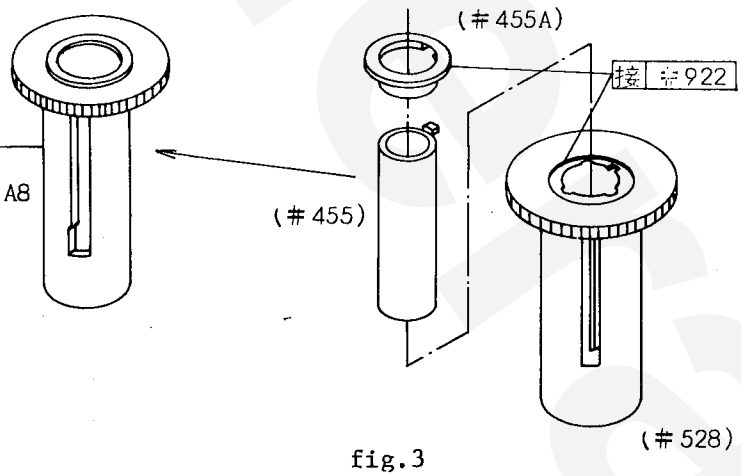

fig.3
A8 Exploded

4. Spool Upper Gear, Lower Base Plate. Advance Gear Installation

Spool upper gear (A7)

↓ Position friction plate (#456-1) in Spool groove while rotating Spool.

Lower base plate A11 Screw (#835)

↓ Position A11 where spool rotates most smoothly.

Advance gear (A18), Advance cam (#413)

↓ Be sure not to remove cam from claw on the gear.

For positioning, refer to P.(4 – 7)

↓

Screw ⊖ #815 (left-handed)

↓

Lead wire #126 (red, orange) Lead wire #135 (Orange)

Refer to wiring diagram 38 (P. 38)

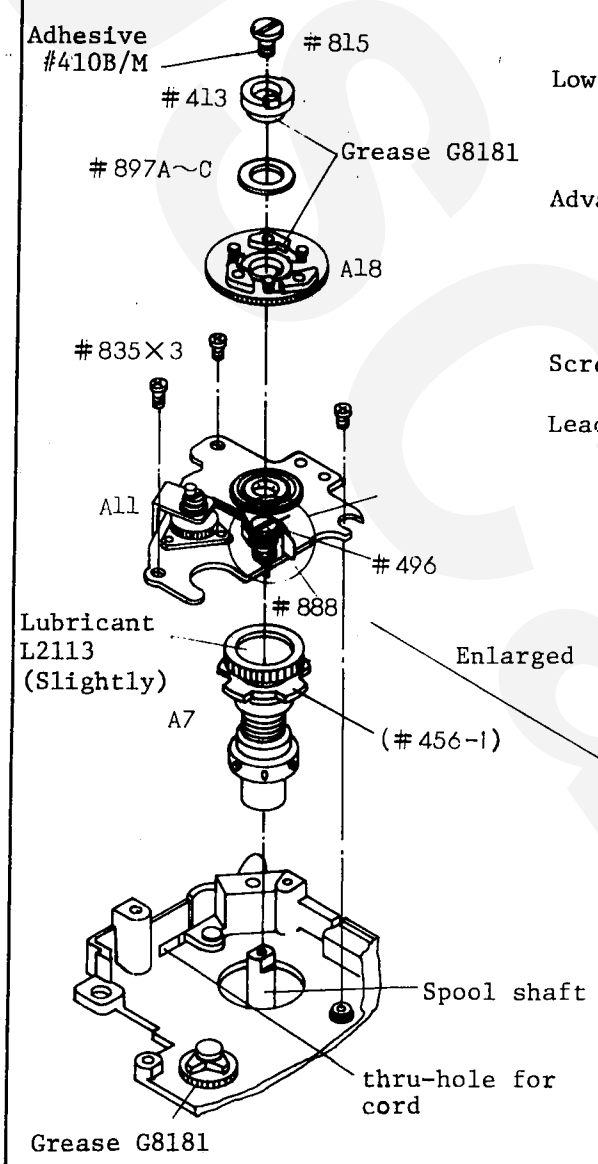

Enlarged

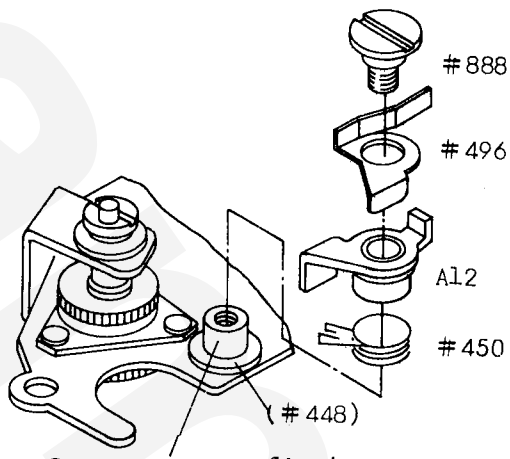

fig.4

Spool Friction torque standard

220-260 g.cm

After spool installation, loosen screw (#824x3), then adjust friction by rotating spool top gear nut #421

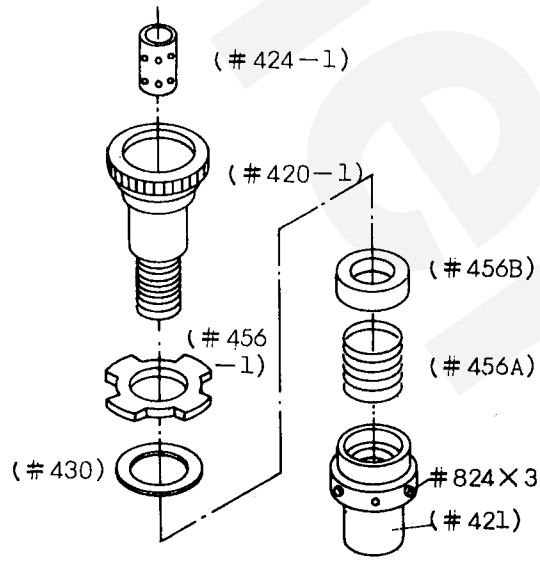

fig.5 A7 Exploded

4-1 Spool top gear / lower bracket / wind-up gear installation

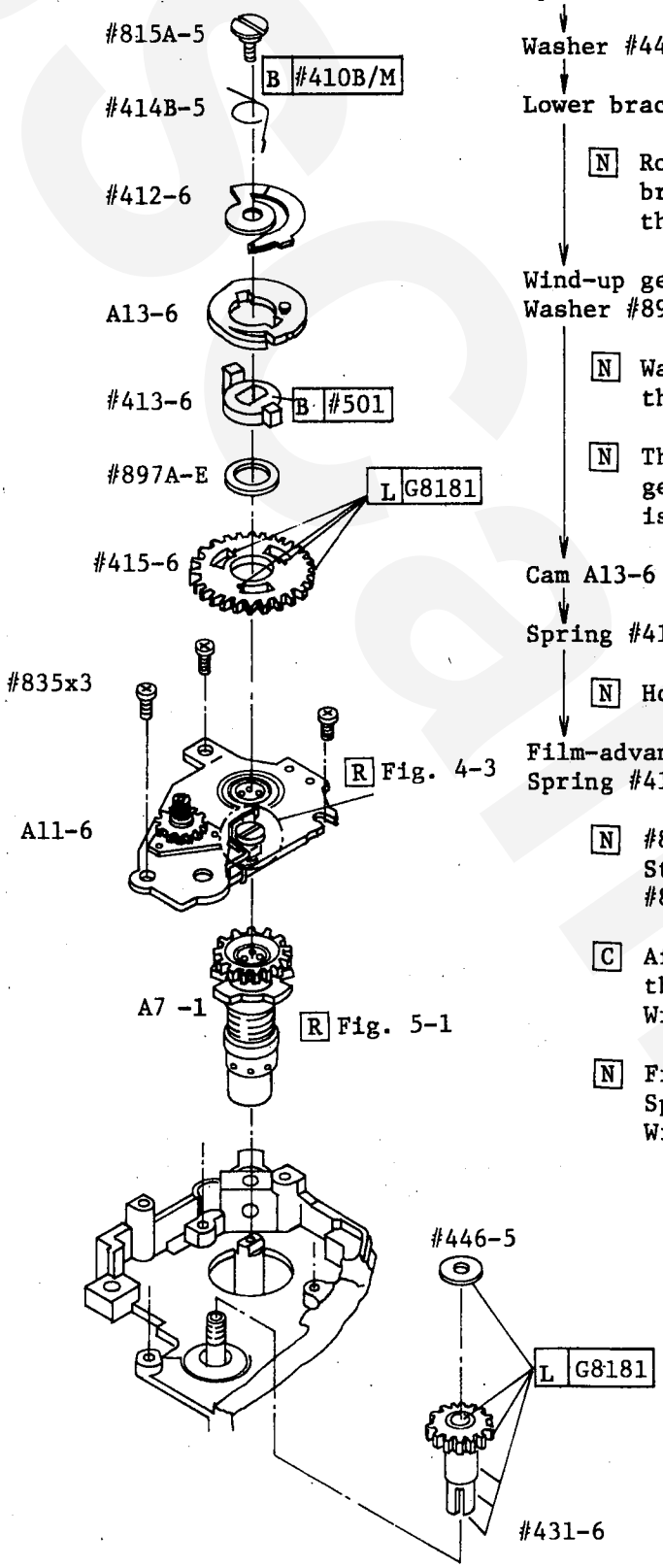

Spool top gear A7-1

N Rotating spool, let Friction plate #456-1 drop into inside groove of spool.

Sprocket upper gear #431-6

Washer #446-5

Lower bracket A11-6 ⊕ #835 x 3

N Rotating spool, install Lower bracket A11-6 in the position of the most smooth rotation.

Wind-up gear #415-6, Wind-up cam #413-6, Washer #897A-E

N Washers #897A-E of five different thickness are available.

N The installing position of Wind-up gear #415-6 and Wind-up cam #413-6 is refered to Page 6V-b, Fig. 4-1

Cam A13-6

Spring #412-6

N Hook Spring #412-6 to Cam A13-6.

Film-advance shaft screw #815A-5, Spring #414B-5

N #815A-5 has a left-thread. Standard tightening torque of screw #815A-5 is 3kg-cm.

C After tightening the screw, check the combination movement of Wind-up cam #413-6 and Spring #412-6

N Fig. 4-1 shows the section where Spring #412 should be cemented on Wind-up cam #413-6.

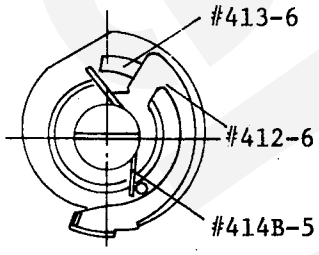

fig. 4-1

Wind-up gear positioning

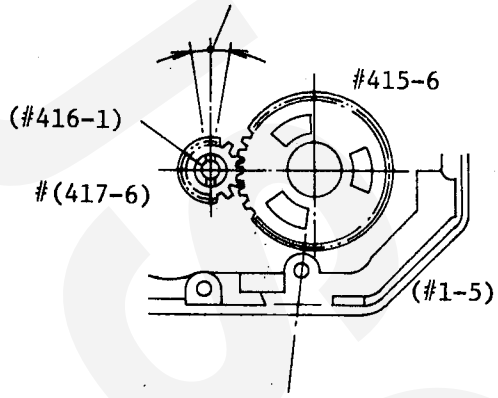

fig. 4-2

When one of the fan-shaped openings of Wind-up gear #415-6 is aligned with the center of screwhole for #441-6, the slot of #416-1 & #417-6 should locate toward the body line at a right angle.

Positioning allowance is within a one full portion of the slot #416-1.

fig. 4-3 A7-1

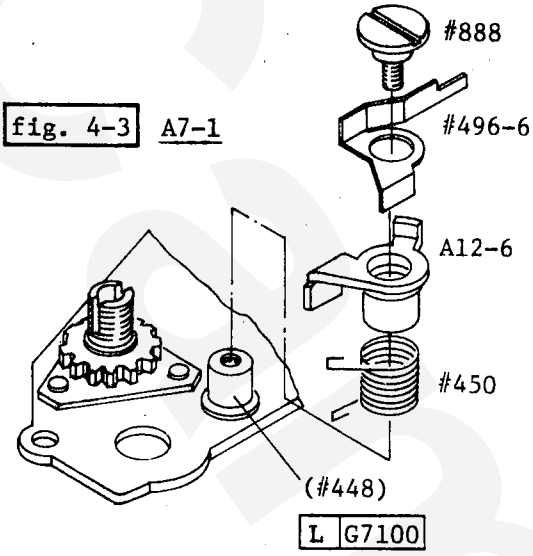

A7 disassembly

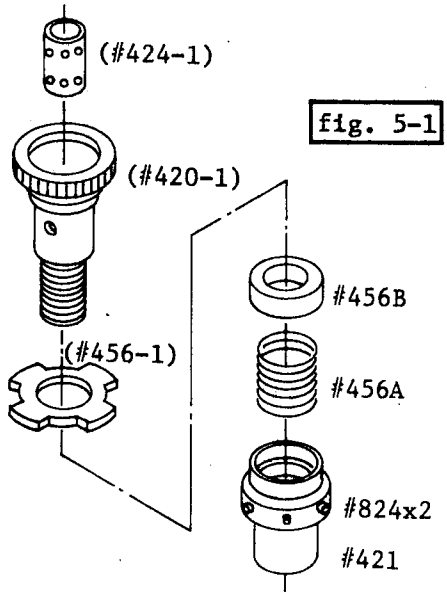

fig. 5-1

RA Standard friction of spool : 125 - 157g cm
For adjustment, loosen three Setscrews #824 to use the vertical movement of Spool top gear nut #421.

5. Positioning of Counter Eccentric Shaft(#516-1), Advance Gear A18, Advance Cam #413

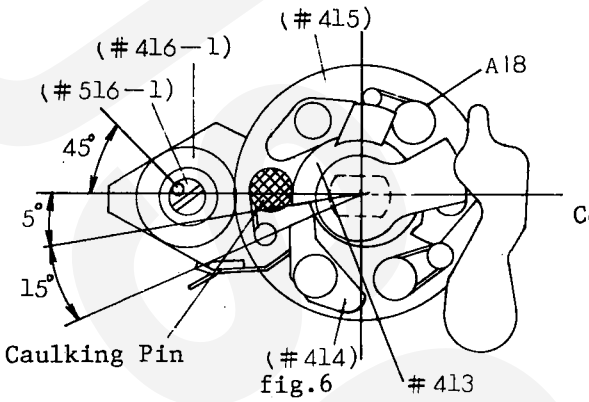

fig.6

Eccentric shaft positioning

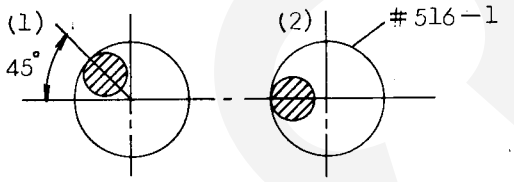

Set cam contacting stopper

Film-advance completed condition with upper base plate installed

Counter eccentric shaft (#516-1)

Rotate sprocket and position #516-1 at a 45 degrees from horizontal center line(See Figure 6)

Advance cam #413
Advance gear A18

Install #413 and A18 when set cam (A10) contacts stopper on body die-casting. To properly adjust the relative position of #413 to #414, engage #415 with #416-1 so that the tip of #414 is at 20 degrees from horizontal center line.(See Figure 6) Note that the center of caulking pin on A18 should be on horizontal center line

After installation, check to see if #516-1 is properly positioned as shown in Figure 7a by rotating #815. After installaing upper base plate, check to see if #516-1 is positioned as shown in Figure 7b.

6. Upper Base Plate, Switch Lock Lever Installation

Body die-casting#1

Upper base plate (K), ⊕ 845x2

Press the film-advance lever flush with body. Rotate Sprocket stopper release plate(#408A) counterclockwise (viewed from the below) until #408A contacts Film advance shaft(#408).Engage advance claw lever (#511-1) with Counter eccentric shaft (#516-1). Put multi-exposure lever (#490) into cutout of charge cam claw release lever (#489) Positions switch lever(K4) between spool shaft and meter switches(#487,#488) (Refer to P. 8 item 7)
Fix Screw(#845-1) into the cutout of #502-1 by rotating #502-1.

Switch Lock Lever (P4), Screw(#473)

Pulling out film-advance lever, install P4. Be sure to properly engage #476 as illustrated in Fig. 8.
Screw #473 into the notch of #502-1 rotating #502-1. To remove Upper Base Plate, be sure not to remove Switch Lock lever, but to loosen #473.

Lead wire #136(Blue),Lead wire #137(Purple) (Refer to P.34 item 38)

After soldering #136 and #137, attach camera back and check the frame counter for correct operation free from skipping, double-frame advance or failure of advance. Also, check for proper resetting.

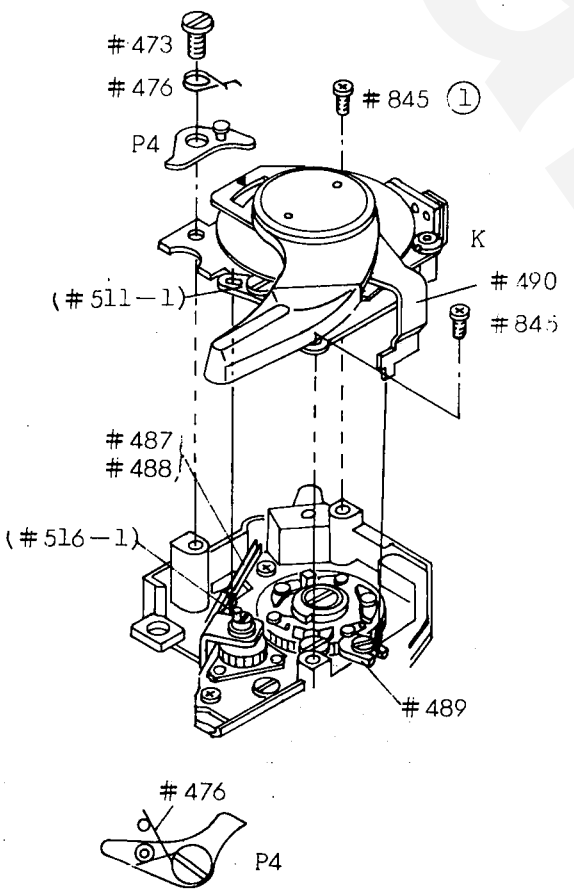

fig.8. Spring(#476) Installation

7. Frame Counter Dial Installation

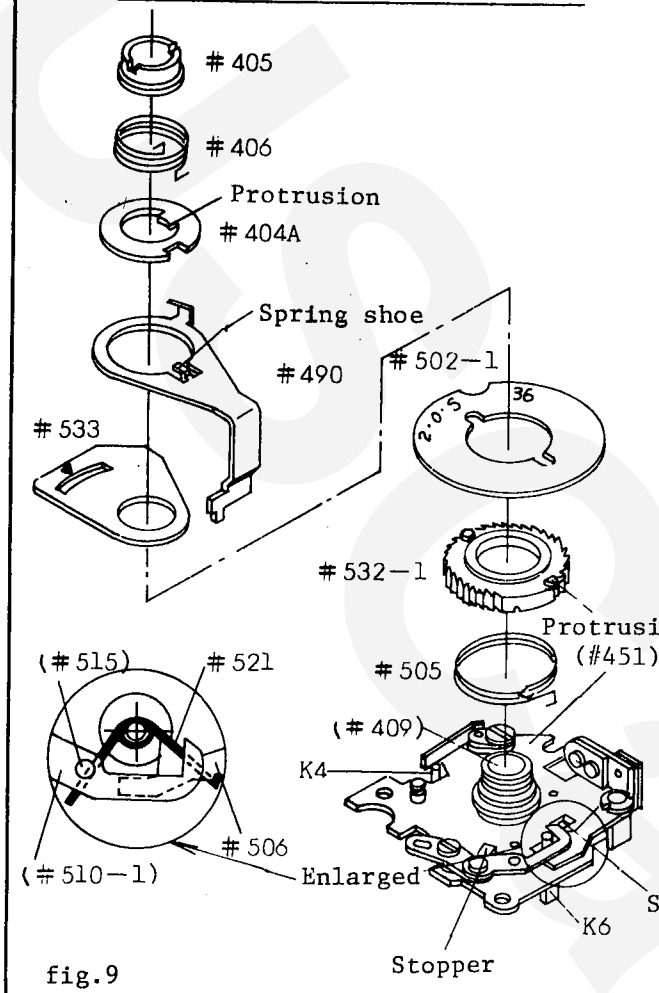

fig.9

Spring(#505)

↓ Install one end into spring hanging hole on the upper base plate(#451)

Ratchet(#532-1)

↓ Install the other end of #505, turn #532-1 one turn clockwise and return #532-1 to the stopper.

Frame counter dial(#502-1)

↓ Align the cut with the protrusions on #532-1 with "S" positioned toward bayonet.

Frame-counter index(#533), Multi-exposure lever(#490), Counter retaining ring(#404A)

↓ Fit the protrusion of #404A in the cut of #409

Lever axle nut(#405)

↓ Align index "▼" of #533 with "S" of #502-1, then tighten #405.
Check to ensure smooth rotation of #502-1

Spring(#406)

Engage #406 onto spring shoe on #490

Spring engaging hole

Spring(#521) Installation

8. Film Advance Lever Installation

Sprocket release plate(#408A)
Film advance shaft #408

↓ Position referring to Fig.10

Film advance lever (P3)

↓ Install #406 on P3 and turn P3 one full turn counterclockwise.

Wind-up lever screw #403

Check film advance lever for smooth operation.
Thrust play to be 0.13mm or less.

After installing Upper Cover, apply adhensive #410S/L.

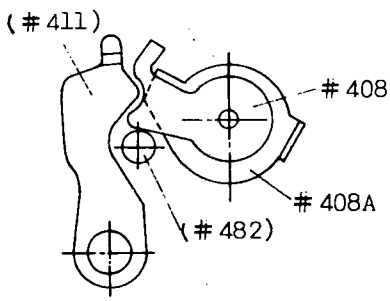

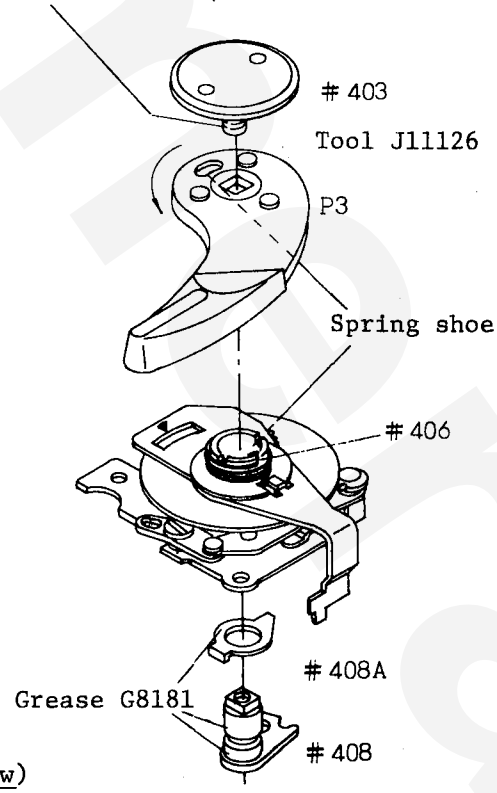

fig.10 Upper Base Plate(Bottom view)

(continued from 6V (b))

6-1 Upper bracket installation

Body (#1-5)

↓

Upper bracket K-6

[R] When installing Upper bracket K-6, bring Cam A13-6 in engagement with Advance gear A #415-6.

[RN] The relative position between Advance claw lever #511-6 and Idle gear B#417-6 should be as depicted in Fig. 7-1.

Screw #845A-5

Screw #845-5 x 2

[N] Screw #845-5 in place aligning the cutout of Frame-counter dial #502 with the screw hole.

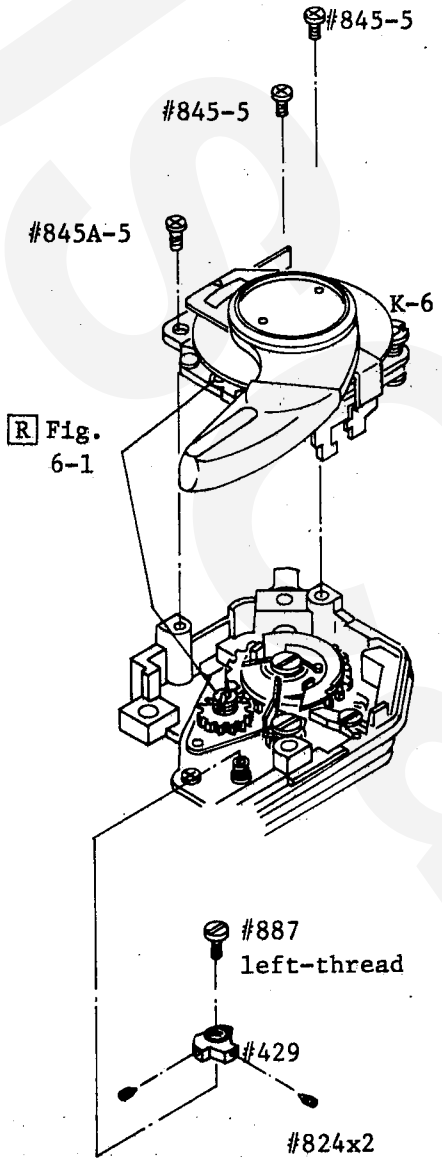

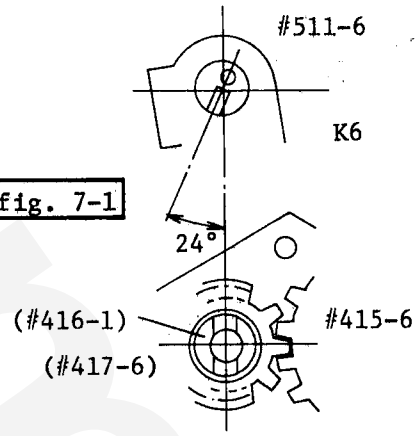

6-2 Sprocket stopper cam installation

Sprocket stopper cam #429

[R] Temporarily tighten Setscrews #824 for adjustments in the next step.

[N] Screw Sprocket stopper cam #429 in place to go as high as Sprocket shaft #431-6.

Sprocket screw (left-threaded) ⊖ #887

[N] Sprocket stopper cam positioning should be refered to Page 9V.

7-1 Upper bracket component installation

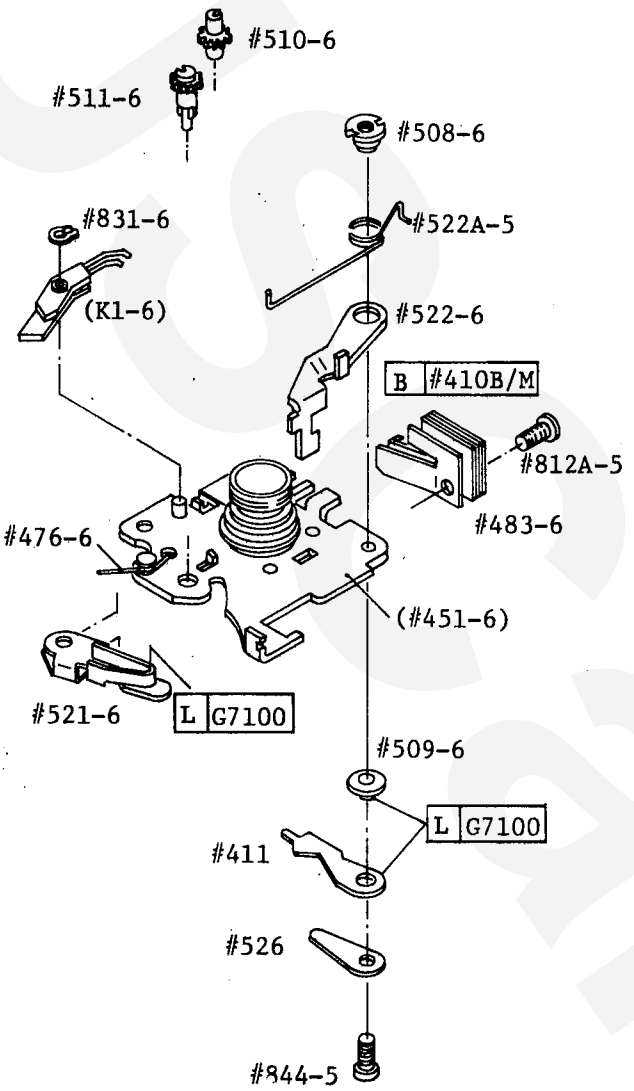

Advance gear

Upper bracket (#451-6)
↓
Advance gear #511-6
↓
Resetting spring #521-6

[R] After installing Advance claw gear #510-6, fix Resetting spring #521-6 in place.

[RN] The cutout of the gear shaft #510-6 should face the spring in the shutter-cocked condition for proper operation of the frame counter.
See Fig. 8-1.

7-2 Counter reset lever

Click lever axle #509-6
↓
Click lever #411
↓
Click lever stopper #526
↓
Screw #844-6
↓
Counter reset lever #522-6
↓
Spring #522A-5
↓
Nut #508-6

[N] Hook Spring #522A-5 to Resetting spring #521-6. (Fig. 9-1)

7-3 Click lever spring

Click lever spring #483-6 x 5
↓
Screw #812-6

7-4 Switch

Spring #476-6
↓
Switch K1-6

[R] For proper contact of Switch K1-6, use a thinnest metal plate (0.08t) to provide a clearance between K1-6 and G-ring #831-6, when fixing the G-ring.

[N] Do not use the G-ring once removed.

[R] Hook each end of Spring #476-6 to the cutout of the upper bracket and the switch.

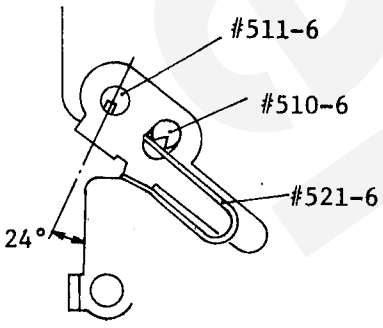

fig. 8-1

7-5 Frame-counter dial

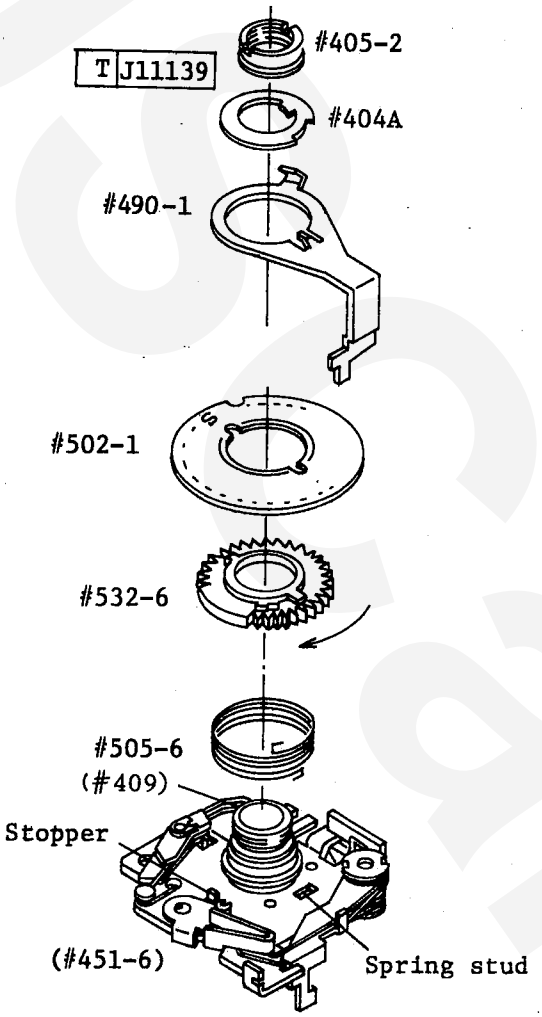

Counter spring #505-6

[R] Hook the one end of the spring to the cutout of Upper base plate #451.

Ratchet #532-6

[R] First hook the other end of Counter spring #505-6 to Ratchet #532-6, and then turn the ratchet one turn clockwise. Use the stopper to hold the ratchet in this position.

Frame-counter dial #502-1

[R] When installing Frame-counter dial #502-1, place the letter 'S' (Start) toward the lever switch K1-6.

Frame-counter index #533
Multi-exposure lever #490-1
Counter retaining ring #404A

[R] Put the protrusion of #404A into the cutout of #409.

Lever axle nut #405-2

[A] After aligning the 'S' of the frame-counter dial with the pointer of the frame-counter index #533, tighten lever axle nut #405-1 strongly.

[C] Check frame-counter dial for smooth operation.

fig. 9-1

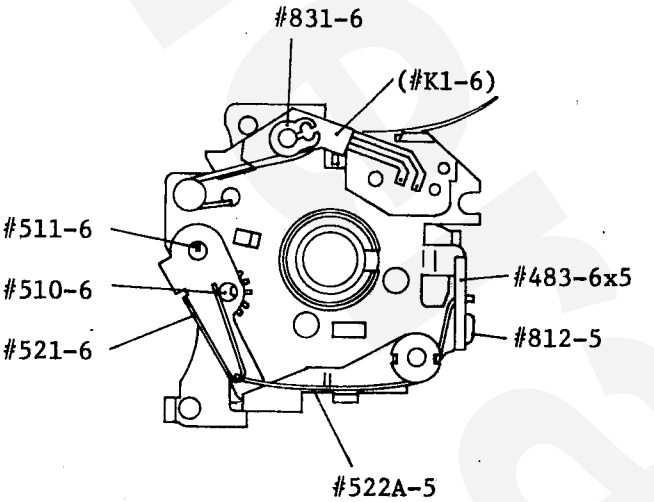

8-1 Film-advance lever installation (temporary)

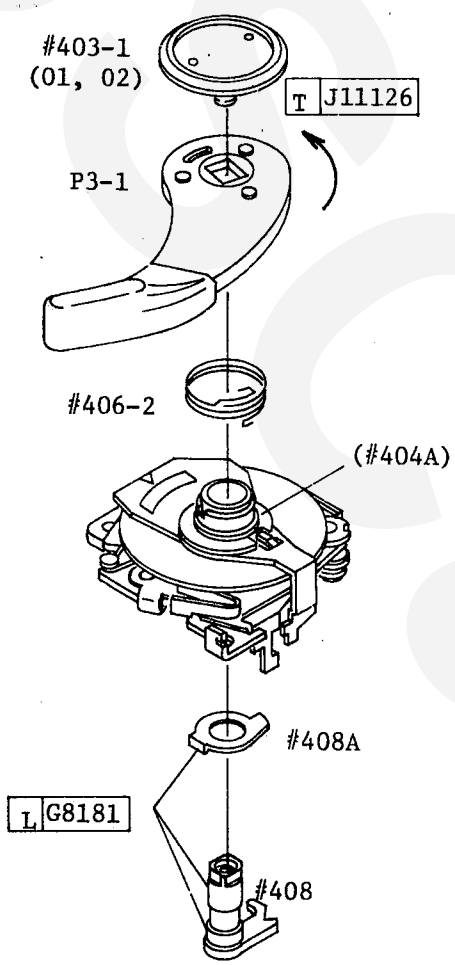

Sprocket stopper release plate #408A

↓

Film-advance shaft #408

↓

Film-advance lever retaining spring #406-1

R Hook one end of #406-1 to the cutout of Film-advance lever bush #404A-1.

↓

Film-advance lever P3-1

R Hook the other end of #406-1 to the cutout of Film-advance lever P3-1, and then turn it one turn counter clockwise.

↓

Wind-up lever screw #403-1

C Check the smooth movement of Film-advance lever P3-1.

C Standard torque to pull out the lever: 1-2kg cm
Standard play in a vertical direction: within 0.13mm

N The fig. 9-1 shows the rest position of film-advance lever and the engagement between #408 and #411 at that time.

fig. 10-1 Film-advance lever in the rest position

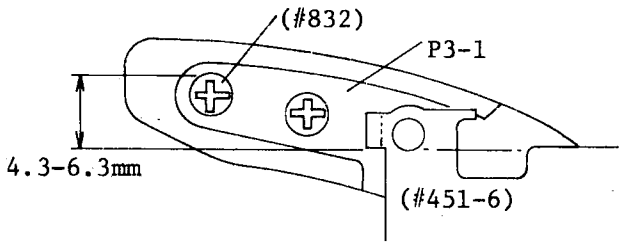

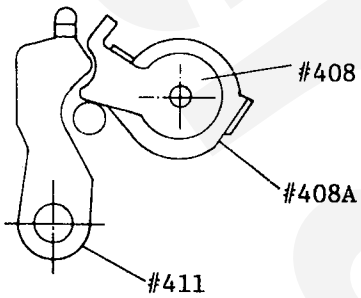

9. Sprocket Stopper Positioning

Set sprocket teeth positioning gauge (J18064) onto body-aperture frame and holding film-advance lever fully stroked, measure the sprocket play on the scale of J18064. The play to be within 0.8mm.

Repeat the measurement three times in the same manner to make sure the proper operation of #429 at each area shown.
Adjust the play by rotating #429 after loosening #887 (left-handed) and #824. (Refer to Fig.11 and 12)

Be sure to provide 0.1 to 0.2mm clearance between #429 and #434 on positioning.

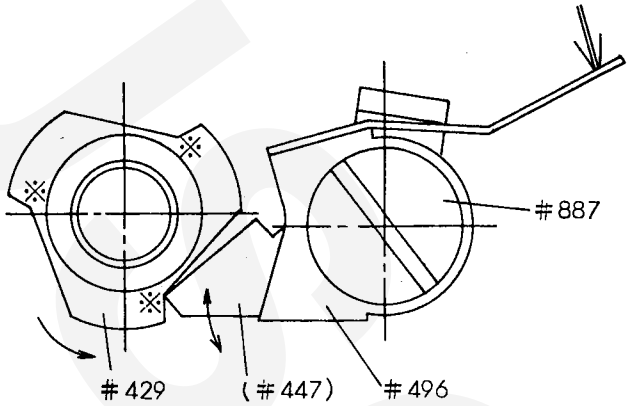

fig.11

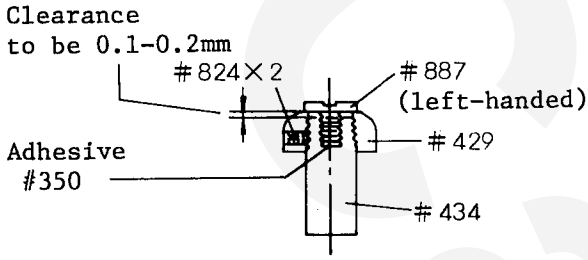

fig.12 Cross section of Sprocket shaft

Sprocket Positioning

Check to see if end of the sprocket teeth comes to the position as depicted in Fig.13,
with film-advance lever stroked by pressing the sprocket slightly by finger.
If improperly positioned, return the film-advance lever to the stand-off position. Then, applying a slight finger pressure on the lever, adjust #429 after loosening two screws(#824). See Figure 14.

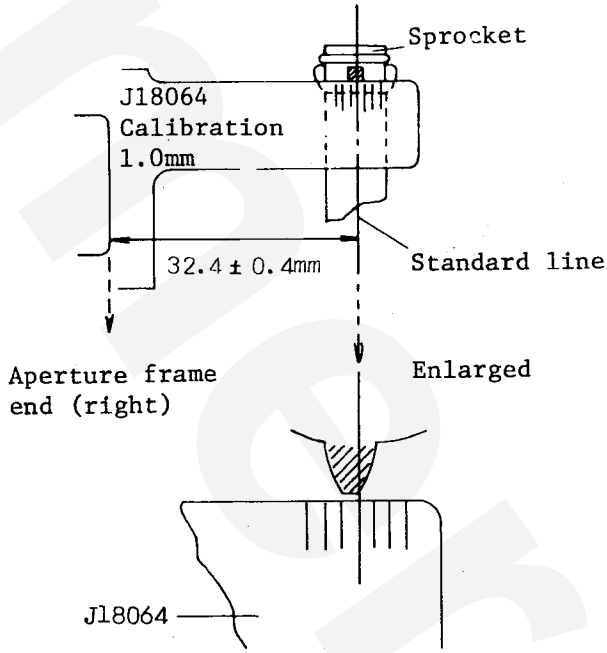

fig.13 the right tip of sprocket teeth to be on the standard line.

Measurement with J18064

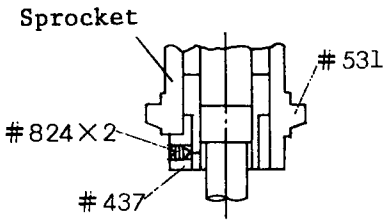

fig.14
Cross section of lower part of sprocket

10. Ratchet Cam, Pendulum Adjustment

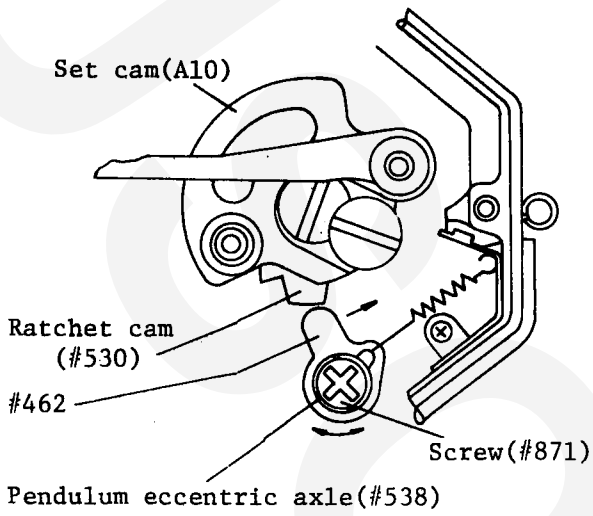

fig.14. Bottom view of wind-up mechanism

From when pendulum(#462) disengages from Ratchet cam(#530) until the film-advance lever is fully stroked, movement of ratchet cam should be within 0.2mm.

Loosen #871 and adjust #530 by rotating #538. Be sure to re-tighten #871. Make sure proper shutter cocking or wind-up operation when film-advance lever is stroked slowly or quickly, and weakly or strongly.

11. Shutter Charge Lever, Motor Coupling Installation

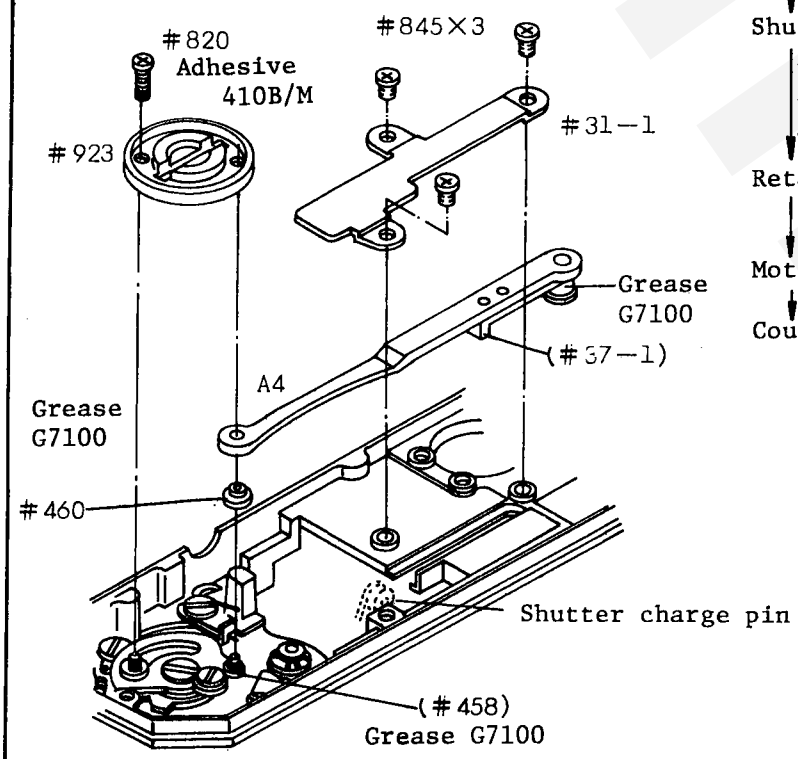

Set cam collar (#460)
↓
Shutter charge lever (A4)
↓ Fitting A4 onto #460, position #37-1 at right side of shutter charge pin.
Retaining plate(#31-1)
↓ Screw ⊕ #845x3
Motor Coupling(#923)
↓
Coupling screw(#820)

Check that shutter cocks certainly when film-advance lever is slowly stroked, and that set cam returns to its original position.

11-2 Blank-shot preventing lever installation

Blank-shot preventing lever #26-2

↓

Blank-shot preventing spring #97

[R] Hook the two holding arms (marked *) of #97 to #26-2.

[N] Lubricating oil should be applied at minimum for preventing its exudation to the electromagnet of shutter.

↓

Blank-shot preventing axle #98, ⊕ #915x1

[C] Make sure that when the spring moves to the direction of arrow, the lever will follow the movement properly and that it returns to the rest position.

[C] First hold the blank-shot preventing lever at the position of the dotted line, after the film-advance lever is stroked to the limit. Then, return the film-advance lever to the stand-off position. In this movement, the blank-shot preventing lever will always couple to shutter charge lever #32-1, which functions as the blank-shot preventor.

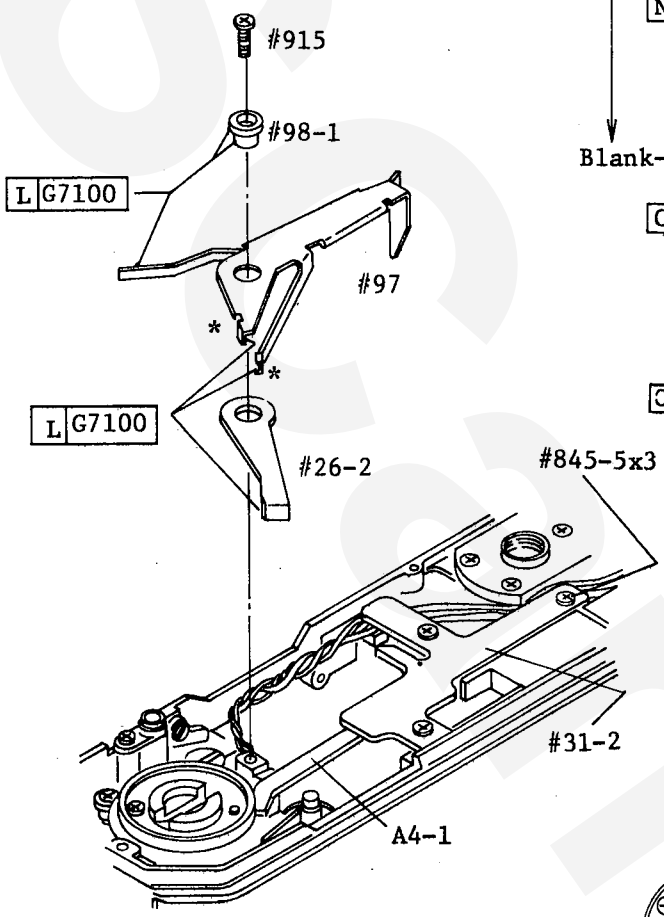

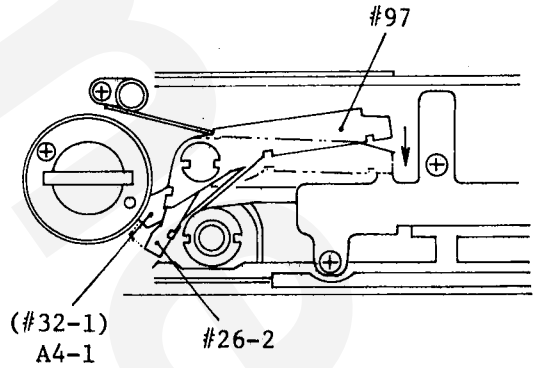

fig. 15-1

12-1 Charge lever / MD switch coupling lever / Battery chamber installation

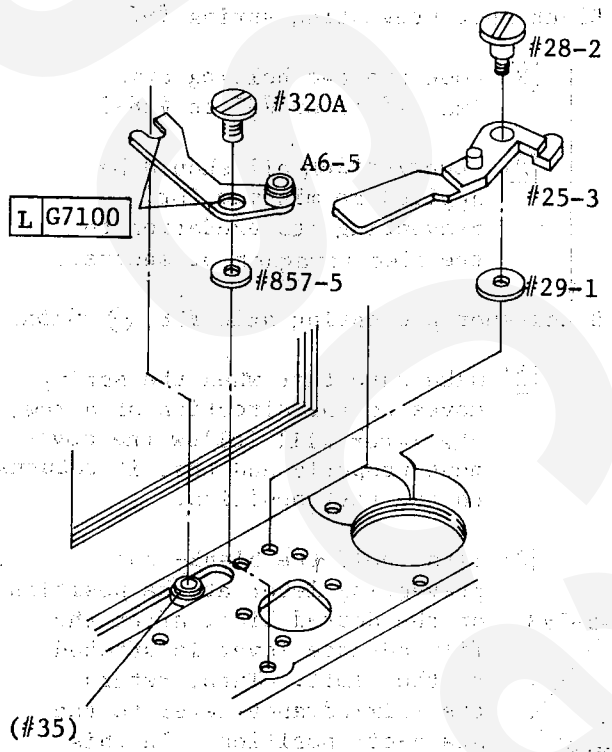

Body (#1-5)

↓

Charge lever washer #857-5
Charge lever A6-5

N Catch the shutter charge lever with the fork of Charge lever A6-5.

↓

Charge lever axle #320A

↓

Blank shot check lever collar #29-1

↓

MD switch coupling lever #25-3

↓

Signal lever axle #28-2

Body (#1-5)

↓

Battery chamber A5-2 ⊕ #855A x 2

N Adjustments of MD switch coupling lever can be refered to Page 82V.

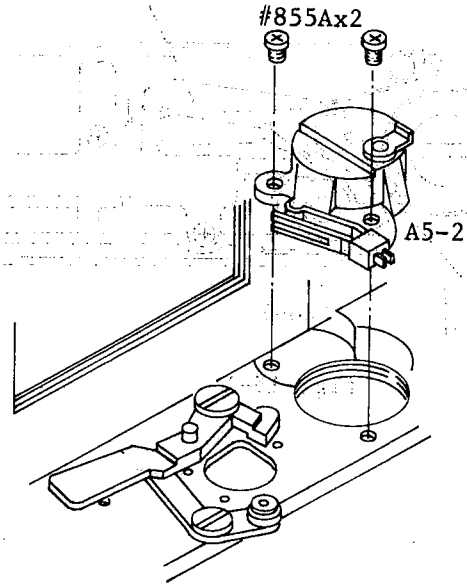

12. Charge lever, Motor Switch Coupling lever Installation

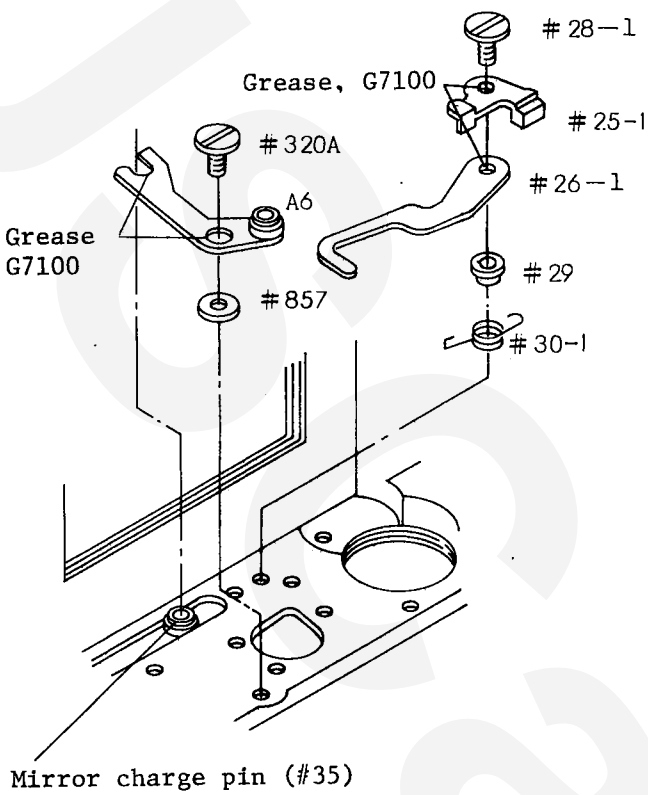

Body
↓
Washer(#857)
↓
Charge lever(A6)
↓ Place the fork of A6 to Mirror charge pin
Charge lever axle(#320A)
↓
Check lever axle collar (#29)
Signal lever spring (#30-1)
↓
Blank exposure preventer lever (#26-1)
↓
Motor switch coupling lever #25-1
↓ Up-down play to be 0.1mm
Signal lever axle #28-1

Check that #26-1 engages with Mirror charge pin collar #35 before pendulum gets free. after film-advance lever is returned slowly to its original position from the fully striked position.

Battery Case Installation

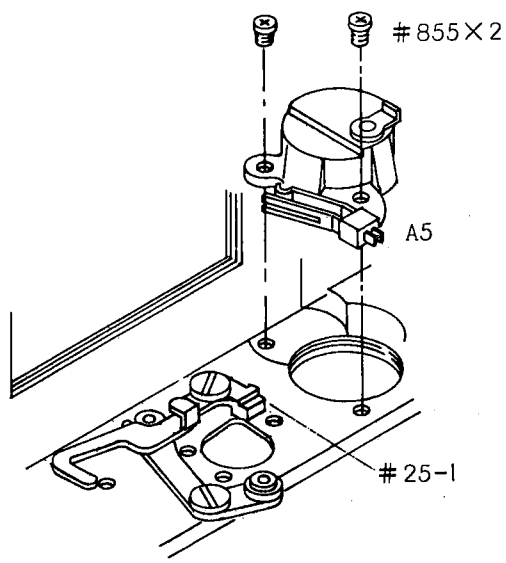

Body
↓
Battery case(A5) Screw(#855)

For MD winding switch adjustment, refer to (page 12)

Check MD winding switch not in contact with body die-casting.

13. Charge lever, MD take-up switch Adjustment

fig.15 MD take-up switch Operation

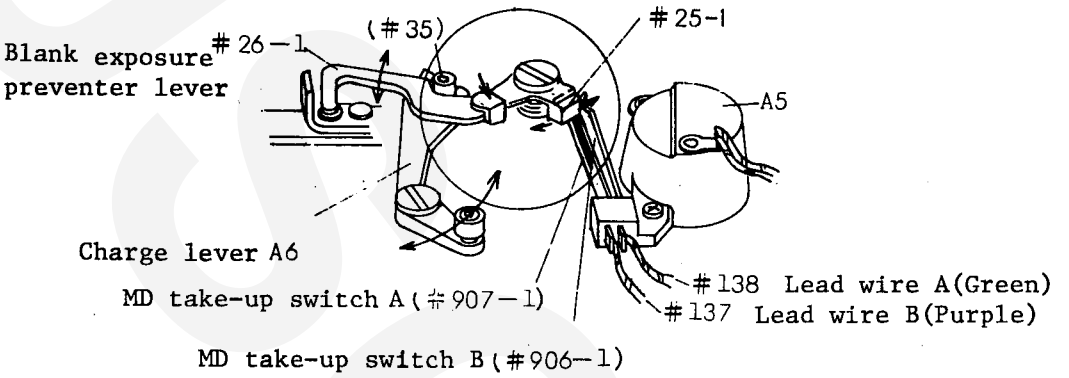

Fig.16 Film-advance completed.....MD Winding Switch turned OFF.

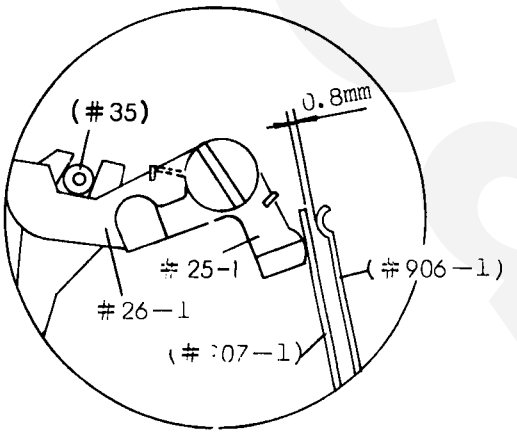

Check by gently operating A3 to ensure that #26-1 is pushed by #907-1 and contact against #35.

Bend #907-1 to a proper contact pressure

The clearance between #906-1 and #907-1 to be 0.8mm, adjustable by bending #906-1.

Fig.17 During film-advance operation...MD Winding Switch to be ON.

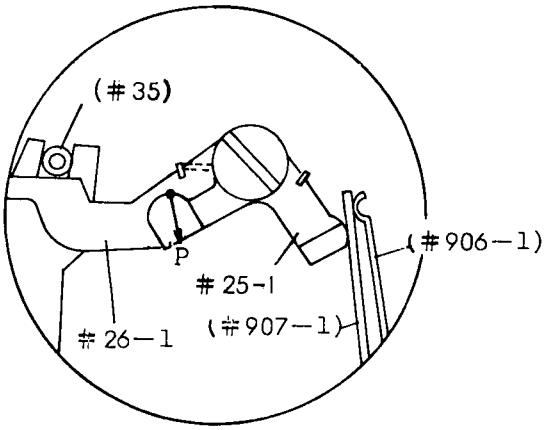

fig.17

Check that MD winding switch is on.

Set J5018 at P point (See figure 17) and measure spring pressure when #26-1 disengages from #35;

Spring pressure to be 75 to 100g

Adjust spring pressure by bending either #907-1 or #906-1

13-1 Charge-lever / MD wind-up switch installation

At the finish of shutter cocking cycle

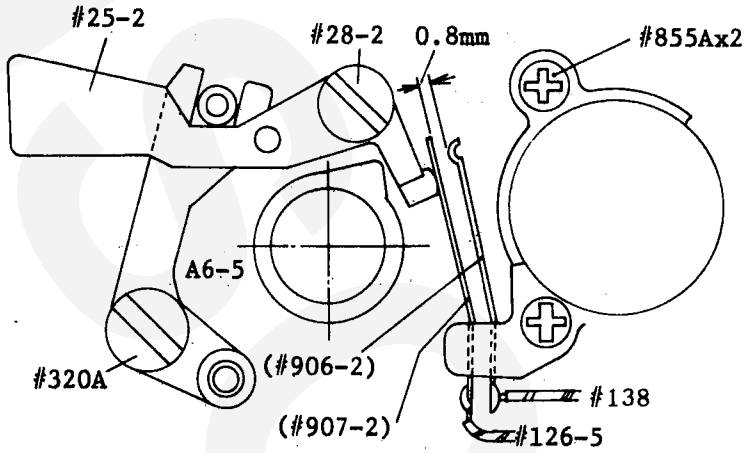

[C] A slight interval (approx, 0.8mm) should be maintained between Switch contact A #906-2 and contact B #907-2 in the shutter-cocked condition.

[A] Adjustments can be made by bending one/ each of them.

Halfway in the shutter cocking cycle

[N] Standard contact pressure of the switch blades : about 50 - 70g

[C] The switch remains closed during the shutter cocking cycle.

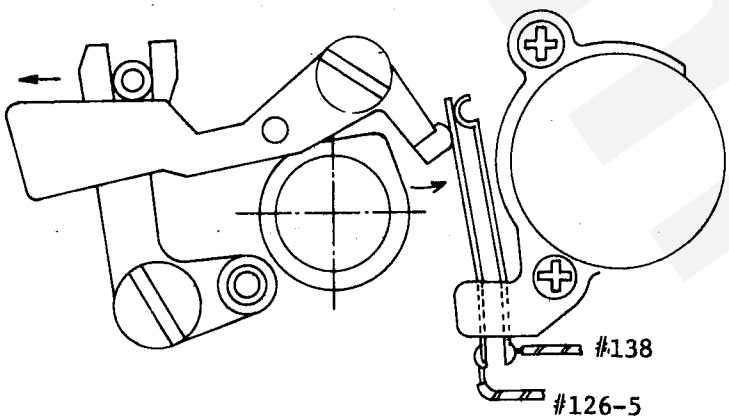

13-2 Soldering Wires to Switch K1-6

Switch printed circuit seat #488-6

Wire #126-5, #135-6

[N] Solder the wires as shown in the figure.

[N] Check the solder joints, referring to the table.

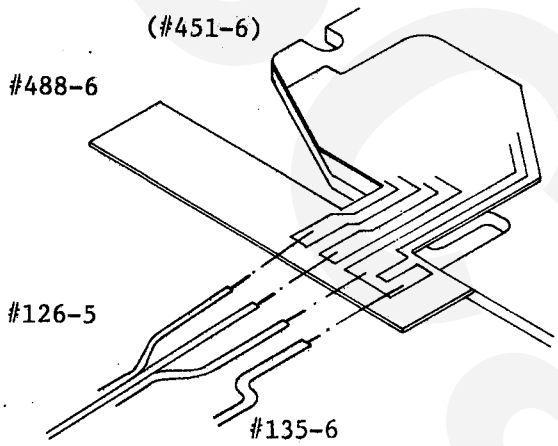

Film-advance lever	Violet wire / Switch #451-6	Red wire / Orange wire
the rest position	on	off
the stand-off -	off	on

[C] The film-advance lever should not catch at the switch blade in the movement.

14-1 Lens release lever / Stop-down lever installation

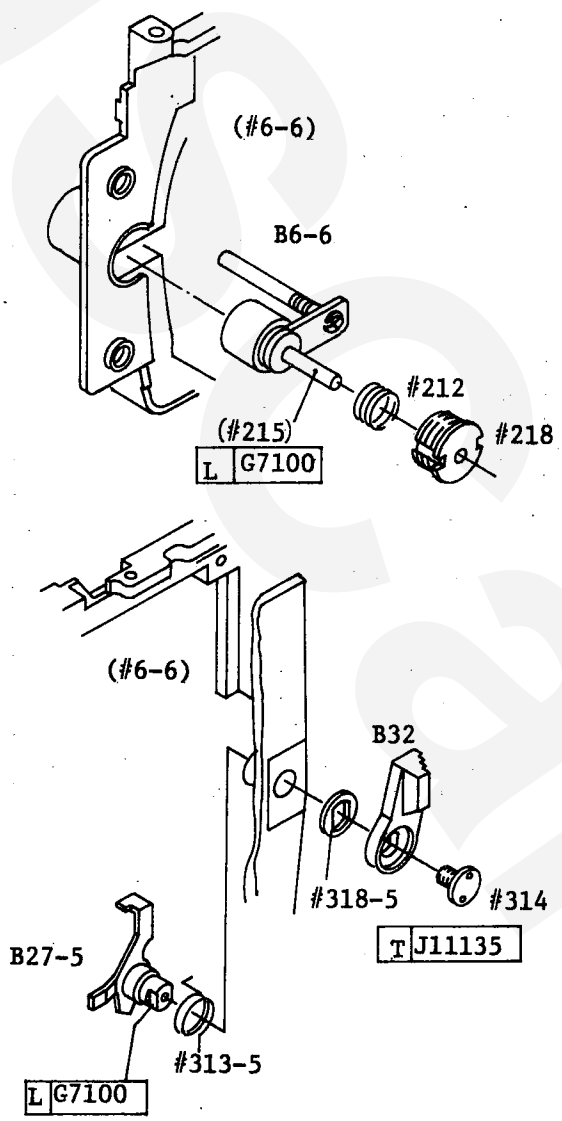

fig. 18-1

Front plate (#6-6)
↓
Lens release lever B6-6
↓
Lens release button spring #216
↓
Lens release button sleeve #218

[C] Check the lens release lever for smooth operation.

Front plate (#6-6)
↓
Manual stop-down lever spring #313-5
Stop-down lever B27-5

[R] Fig. 18-1 shows how to hook #313 in place.

↓
Manual stop-down lever washer #318-5
Diaphragm set lever B32.

[R] Put B32 onto B27-5.

↓
Stop-down lever screw #314

[C] Make sure of the smooth movement and the spring-loaded return of #B32-6.

Check the lever for vertical play: less than 0.2mm
Check the clearance (c=0.5mm) between B27-5 and #132, when B27-5 is free.

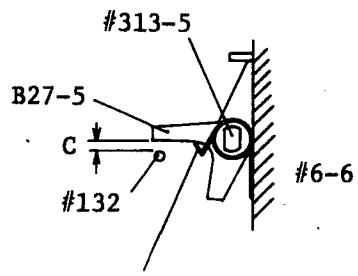

14-2 Mirror / Screen frame installation

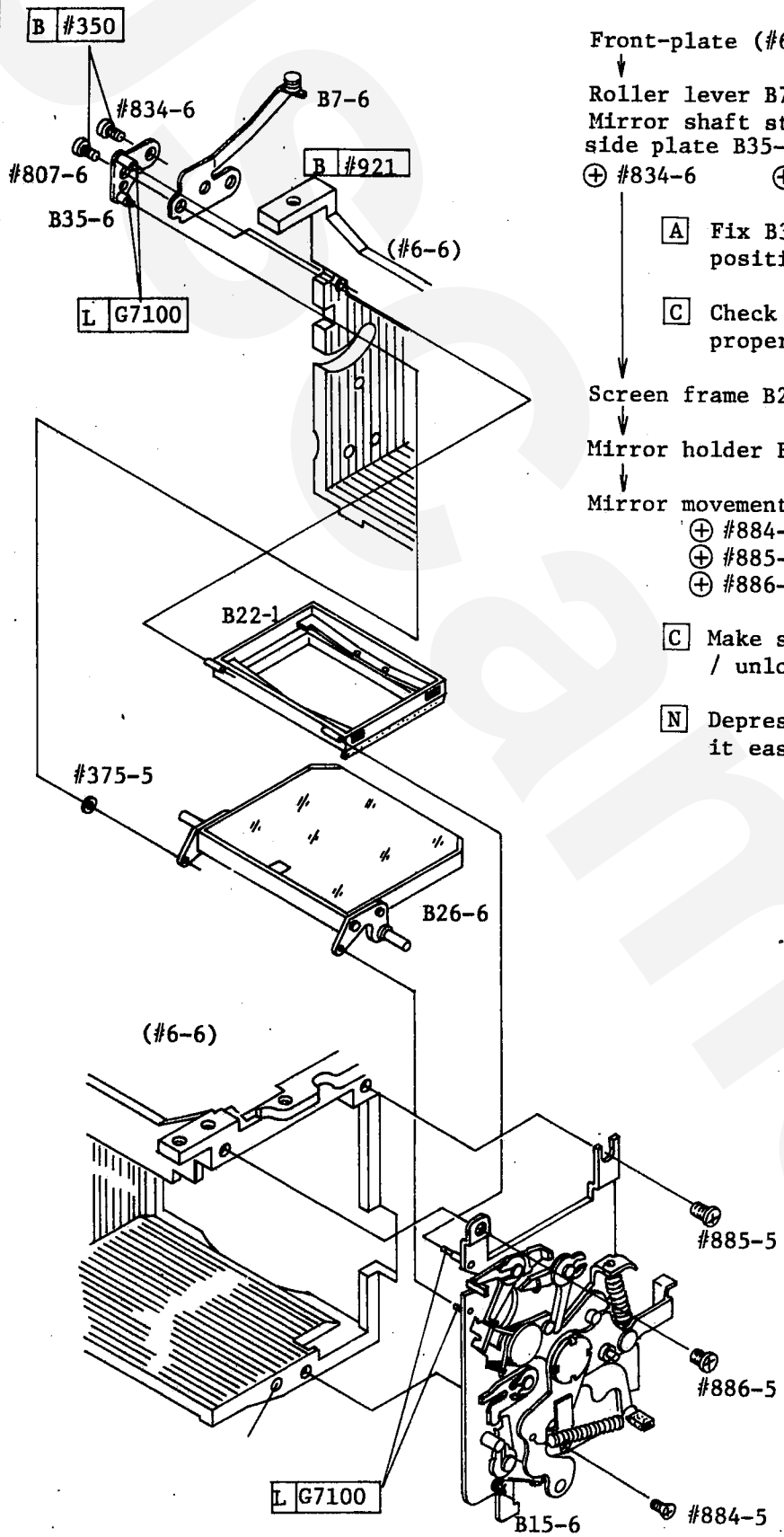

Front-plate (#6-6)

↓

Roller lever B7-6

Mirror shaft stopper, rewind-knob side plate B35-6

⊕ #834-6 ⊕ #807-6

A Fix B35-6 in the depressed position.

C Check B35-6 for smooth and proper movement.

↓

Screen frame B22-1, Washer #375-5

↓

Mirror holder B26-6

↓

Mirror movement unit B15-6

⊕ #884-5

⊕ #885-5

⊕ #886-5

C Make sure that B22 is locked / unlocked properly.

N Depressing B32 downward makes it easier to install B15-6.

14. Front Plate (Screen Frame. Mirror Holder. Diaphragm set lever) Installation

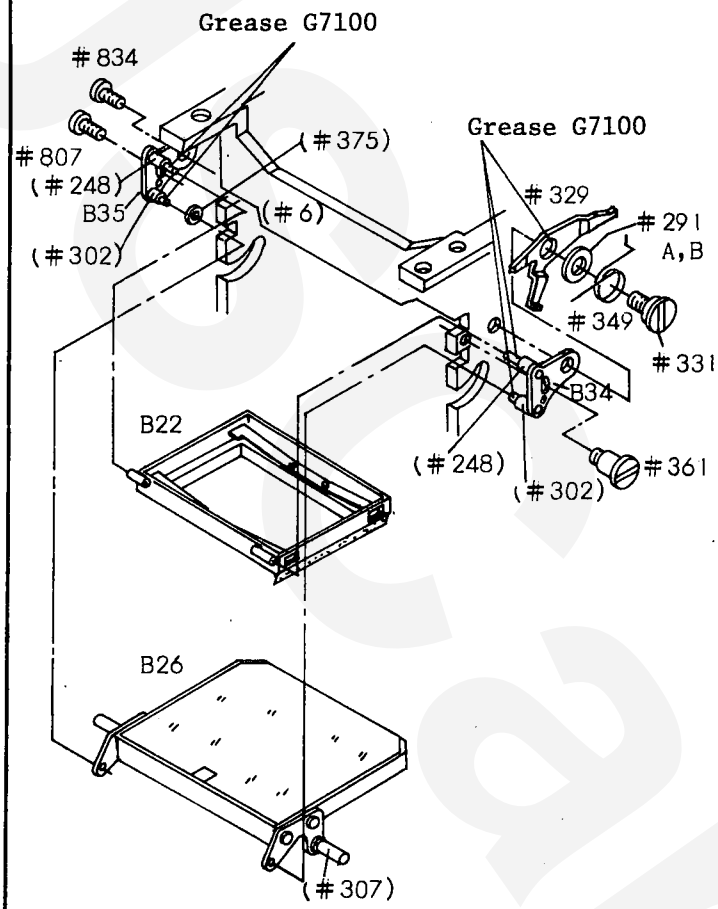

Front plate(#6)
↓
Screen Frame(B22)
↓
Mirror shaft stopper; rewind knob side(B35)

Insert #248 into the tube of B22 then tighten with screw ⊕ (#807) temporarily.

↓
Mirror holder(B26)

Install washer(#375) into Mirror holder shaft(#302). then install B 26 by alighning #302 into the hole of B26

↓
Mirror shaft stopper, advance-lever side(B34)

Insert #248 into the tube of B22 then tighten with screw ⊖ (#361)

↓
Mirror-up stop lever (#329)
Mirror-up stop lever spring(#349)
Screw(#331)

#329 is secured with washer (#291A, B).
Position #361 and #331 on top of oval hole in B34.
For spring installation, refer to the left-below illustratin.

↓
Screw(#834)

Both #807 and #834 to be positioned on top of oval hole in B35

Check that Screen frame(B22) surely drops of itself.
When screen lock spring(#240) is pulled and that B22 is locked firmly by #240.

For screen lock spring, refer to (page 30)
Check Mirror holder B26 for smooth operation

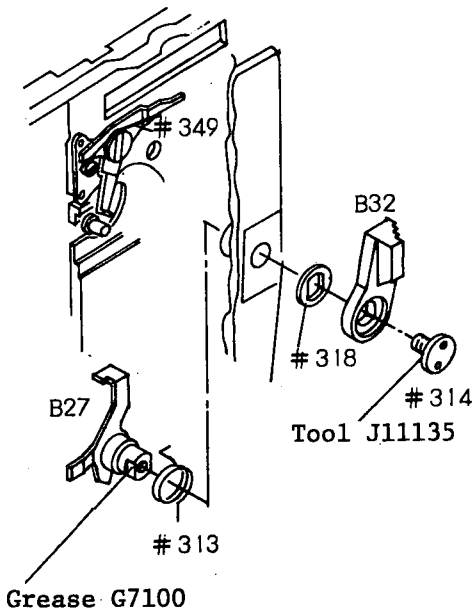

Front plate(#6)
↓
Stop-down lever spring(#313)
Stop-down lever(B27)

#313 installation illustrated in Fig.18.

↓
Stop-down lever washer(#318)
Diaphragm set lever(B32)

Install the both onto B27

↓
Screw(#314)

Check Diaphragm set lever.

Check Diaphragm set lever for smooth operation.
Thrust play of the lever to be within 0.2mm.

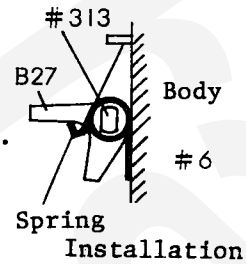

fig.18 #313 Installation

15. Front Plate (Mirror-up lever) Installation

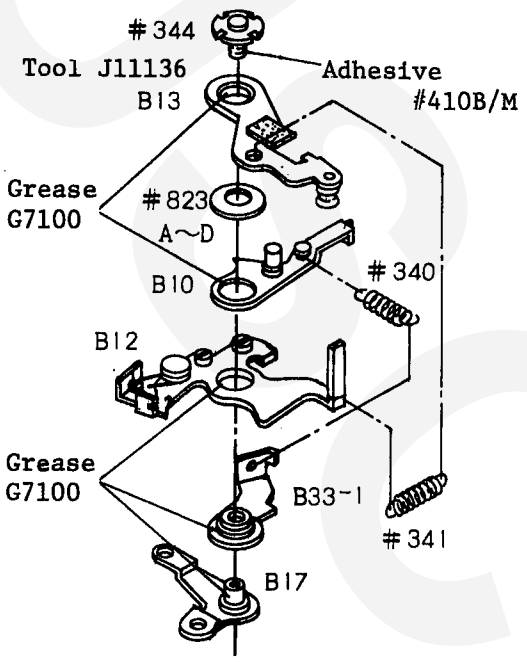

fig.19 Mirror-up lever Assembly

Mirror-up lever Assembly

Mirror lever shaft base(B17)
↓
Diaphragm spring stud (B33)
↓
Mirror-up lever(B12)
↓
Diaphragm actuating lever(B10)
Washer #823
| Remove looseness with one of
↓ #823A - D(t=0.05, 0.1, 0.15, 0.2)
Mirror-down lever(B13)
↓
Diaphragm lever spring(#340)
Mirror-up spring(#341)
↓
Mirror holder spring(#344)

Check each lever for smooth operation

Mirror-actuating mechanism installation

Front Plate
↓
Mirror-up lever assembly (fig.19)
| Install #378 and #379 on Pin A(#307)
↓
Signal lever (#328)
| Tighten with screw ⊖ #357.
| Check that #328 operates smoothly.
↓
Shutter release collar (#320)
Shutter release spring (#348)
Shutter release lever (#321)
| Fix with screw ⊖ #877
| For #348 installing, refer to P.(24)
| Check #321 for smooth operation
↓
Washer(#858)
Mirror down signal lever (B14)
Mirror-down latch lever (#330)
Screw ⊖ #291

Engage #289, referring to P

B14 should operate smoothly.

Check each lever for engagement, looseness and motion.

Refer to P. 24 Figure 37 for position of each spring and lever.

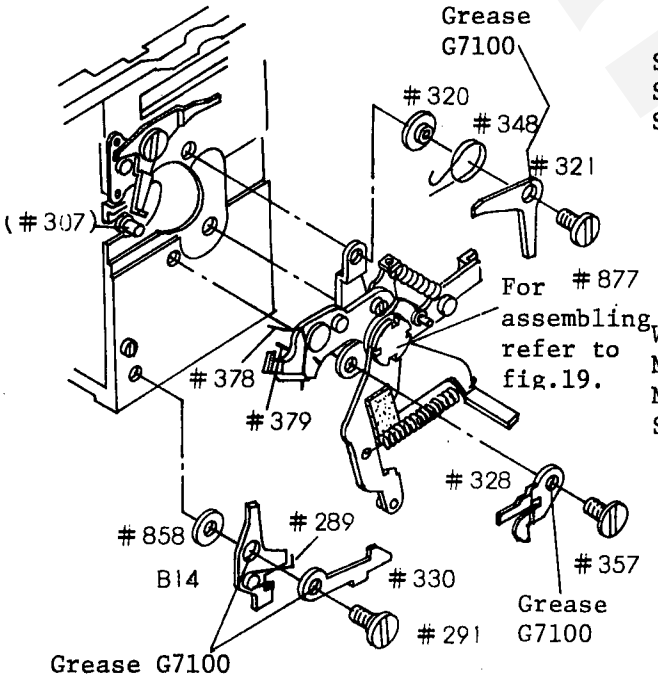

Front plate (Mirror Box), Wind-up side

fig. 19-1

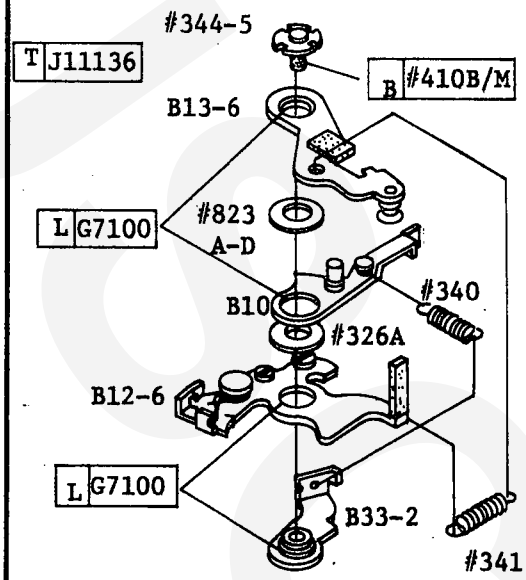

Mirror-up lever installation

Diaphragm spring stud B33-2.

↓

Mirror-up lever B12-6, Spacer #326A

↓

Diaphragm actuating lever B10
Spacer #823A - D

↓

Mirror-down lever B13-6

N Check B13-6 for the play of lever end: less than 0.6mm
Adjustments can be made by adding / removing #823A - D.

↓

Diaphragm actuating lever spring #340
Mirror-up spring #341

↓

Mirror-holder screw #344-5

N Screw torque: 1.6 ± 0.2kg cm

C Check each lever for smooth movement.

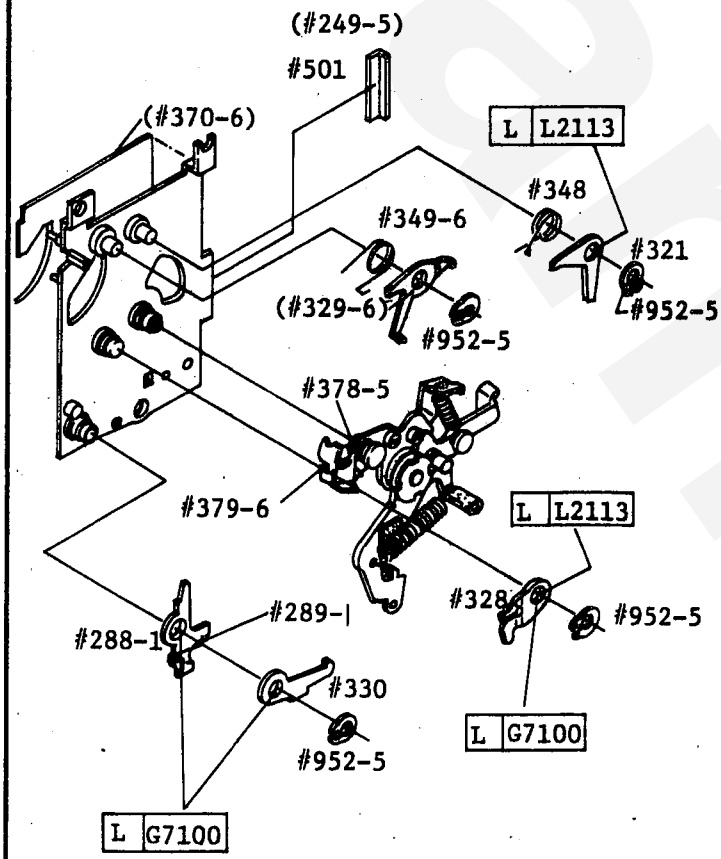

15-1 Mirror movement unit

Base plate (#370-5)

↓

Mirror-up lever sub-assembly

↓

Signal lever #328, G-ring #952-5

↓

Shutter release spring #348,
Shutter release lever #321
G-ring #952-5

R Hook #348 in place.

Mirror-down signal lever #288
Mirror-holder lever spring #289
Mirror-down latch lever #330
G-ring #952-5

R Hook #289 in place.

C Check each lever for smooth movement.

N B13-6 should move with power less than 10g applied.

fig. 19-2

Engagement of levers / springs in the mirror movement unit

Details are refered to Page 24.

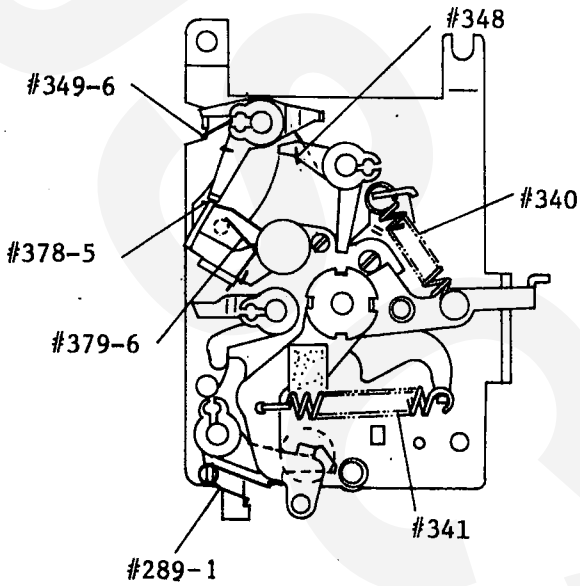

Cushion rubber #372 installation

fig. 19-3

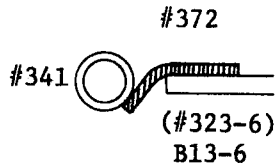

N Fix #372 to touch #341, but not to extend from #341 downward.

Engaged portion of Mirror-down latch lever #330 .

N The engagement of #330 with #323-6 is more than 2/3 portion of #323-6 thickness.

fig. 19-4

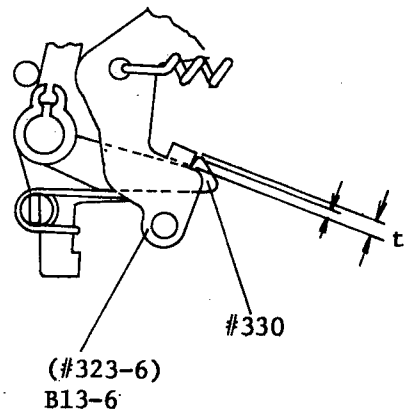

16. Mirror Switch, Memory Switch, Self-timer lever installation

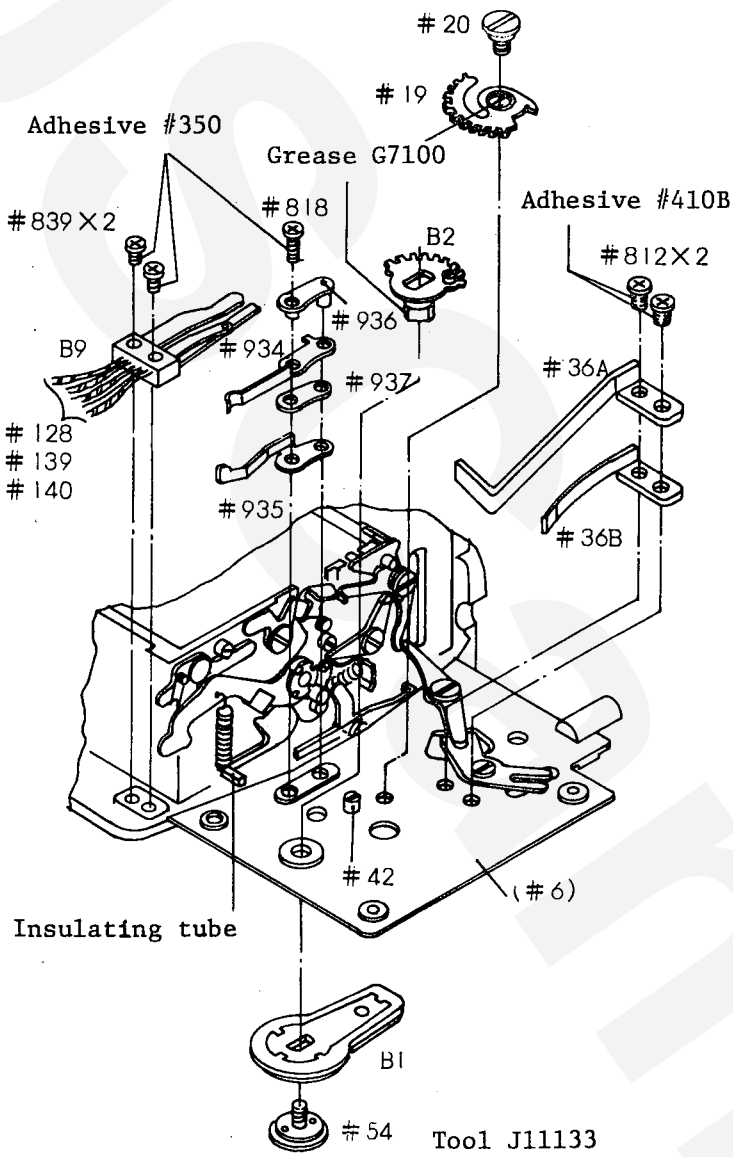

Front plate

↓ Install with mirror locked up.

Mirror switch(B9), Screw(#839)

Check shutter switch to be ON before installing.

Position the contact between Body die-casting and insulator tube, with care not to deform the contact. The contact should not touch #6.

Front plate

↓

Memory switch assembly

Memory switch B(#935)
Insulator B(#937)
Memory switch A(#934)
Insulator A(#936)

Tighten with screw ⊕ (#818).

#935 should not touch #6.

Don't finger-touch the contact

Self-timer lever assembly

Self-timer gear(B2)
Self-timer lever(B1)

Fix with Self-lever screw(#54) using screwdriver J11133.

Check thrust play to be within 0.15

Self-timer gear B(#19), Screw (#20)

For the engagement with B2, refer to fig.20.

Memory switch spring
Memory switch spring B(#36B)
Memory switch spring A(#36A)

Fix with screw ⊕ #812 x 2

For relative position, refer to fig.20.
#36A and #36B should be at the left side of #41.

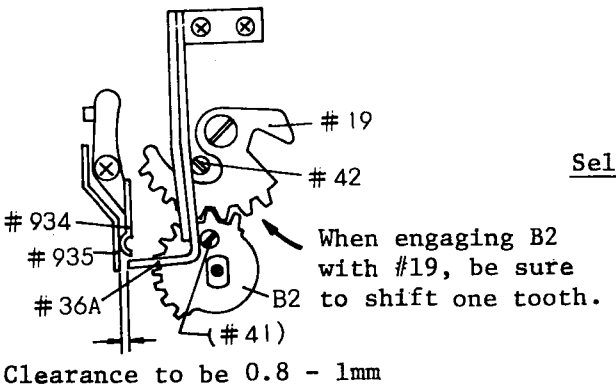

fig.20 Self-timer gear

Self-timer lever positioning

Self-timer lever should be vertical when Eccentric pin #41 contacts #36A. Tilt of the lever to be within 0.5mm to the right or left. Adjust by rotating #41.
Check the clearance between 36A and #935 to be 0.8 to 1.0mm. #935 should detach from #934 midway in turning self-timer lever toward memory-lock direction. Contact pressure of #935 to be 15g or more.

17. Front Plate (Mirror Charge lever, Down lever, Shutter brake) Installation

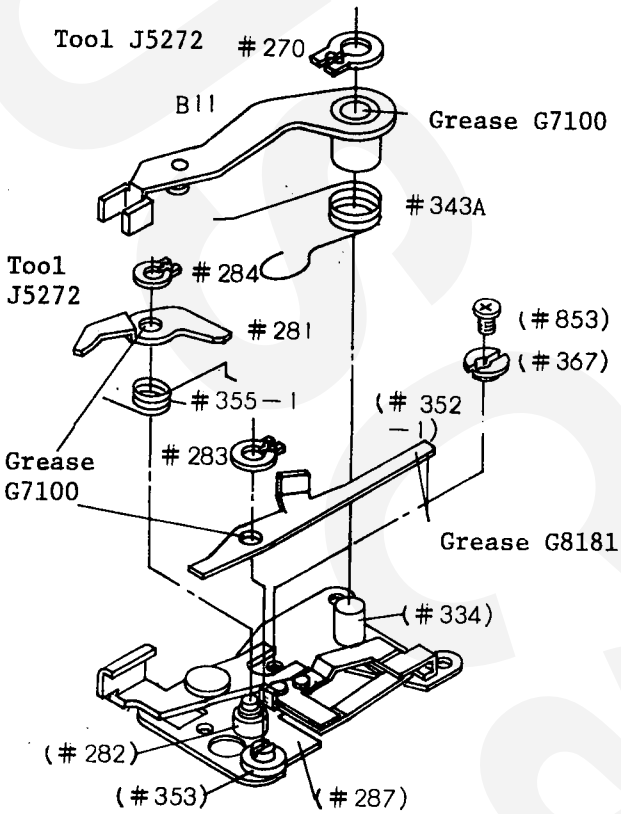

Mirror box base plate(#287)

↓

Down lever eccentric axle(#367)

↓ Screw ⊕ #853

MD signal middle lever(#352-1)

Install into #353, then secure with G ring (#283), rounded edge below as depicted in fig.21.

Check the play of the tip of #352-1 to be within 0.5mm. If excessive, adjust by pressing down #283. Check for smooth operation.

↓

Spring(#355)
Brake release lever(#281)

Install both parts onto brake release shaft(#282) and fix with #284. Install #284 and spring (#355-1) as depicted in fig.21.

The protrusion of #352-1 should not interfere with #284 when #352-1 gets into brake.

Check the play of the tip of #281 to be within 0.3mm.

↓

Mirror-down spring(#343A)
Mirror charge lever(B11)

Install both parts onto Mirror charge lever axle(#334) and fix with #270. As for #343A installing, refer to fig.21. To tighten loose B11, pull down #270

Detaching Power of Mirror Charge Lever (B11)

The power when B11 detaches from shock absorb rubber (#363) to be 180 to 220gms.

Measure the power with J15019 at the station 1 in fig.21, pulling in the arrow direction.

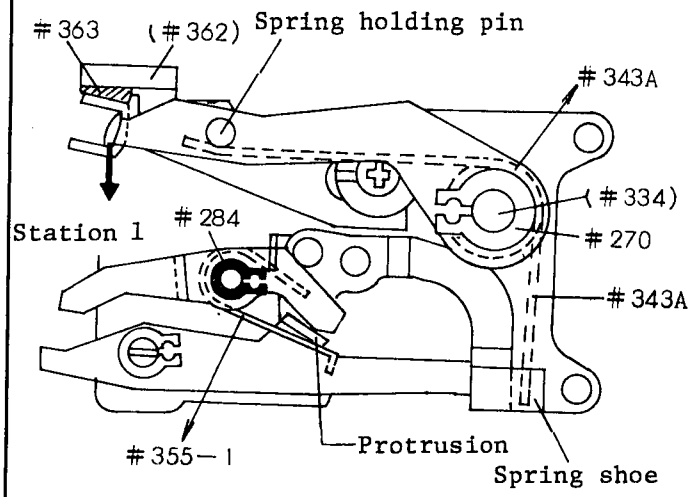

fig.21 Shutter brake assembly

17-1 Shutter brake subassembly installation

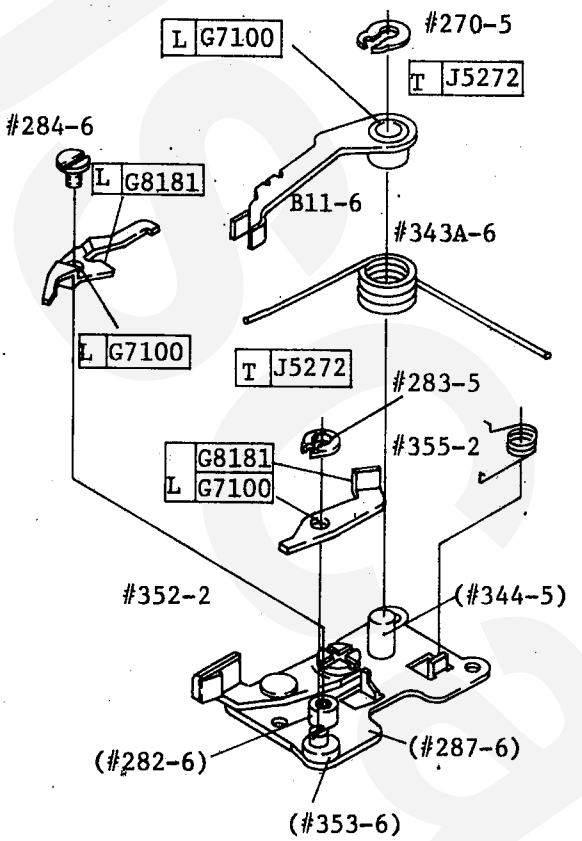

Base plate #287-6

↓

MD take-up signal middle lever #352-2

[R] Put #352-2 to MD take-up signal middle lever axle #353-6 and fix it with G-ring #283-5. Watch out for the direction of the G-ring installed as shown in Fig. 5-1.

↓

Brake release lever #281-1

[R] Screw #284-6 into #282-6 to fix #281-1 in place.

↓

Brake lever retaining spring #355-2

[N] Fig. 5-1 shows how to hook #355-2 in place.

↓

Mirror change lever B11-6

[R] Put B11-6 to Mirror holder screw #344 and fix it with G-ring #270-5.

[N] Depress the ring as far as it will go, so that there is no vertical excessive play of B11-6.

[N] See Fig. 5-1.

fig. 21-1

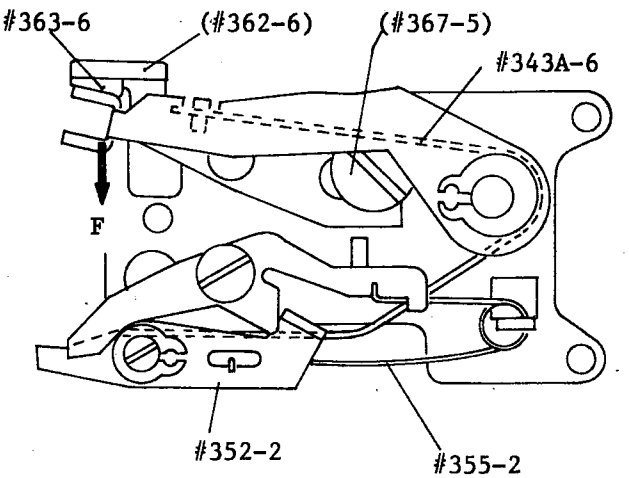

Check the torque of Mirror charge lever B11-6.

Check the torque at the moment when B13-6 engages with #330.

Standard torque: 390 - 440g

18-1 Shutter brake subassembly B36-6 installation

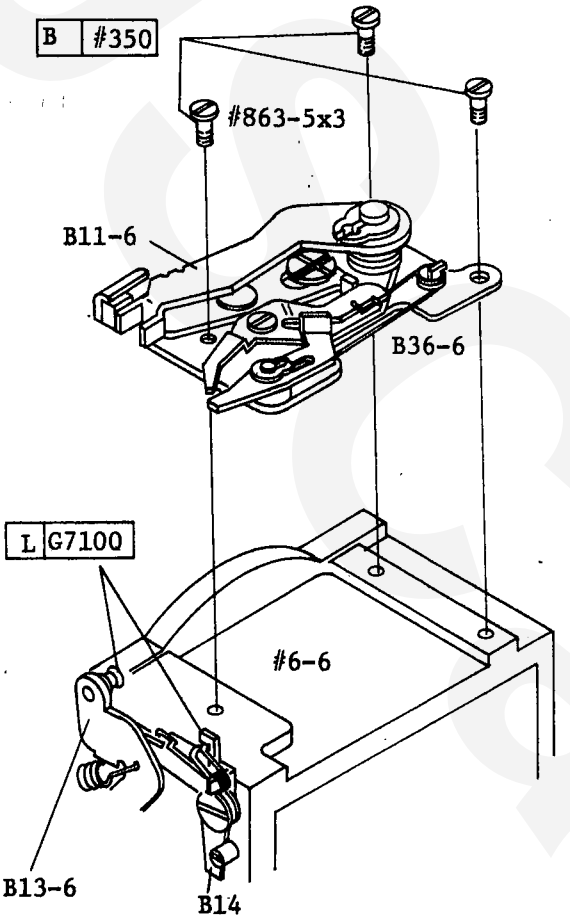

fig. 23-1

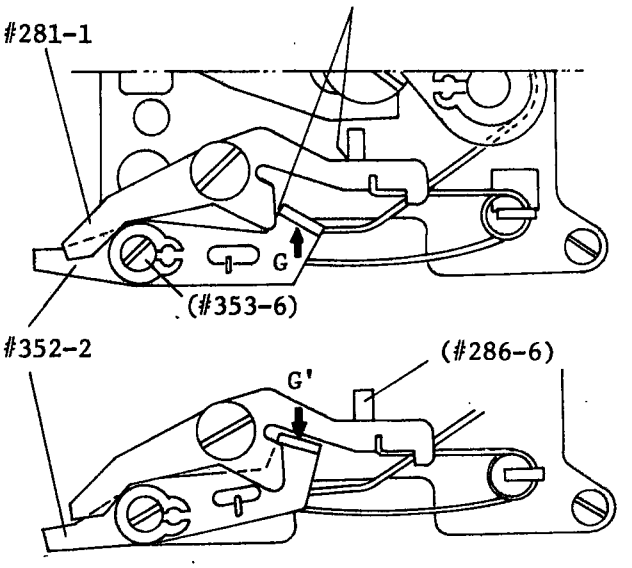

[N] Before installing B36-6 in place, engage MD take-up signal middle lever #352-2 with Brake release lever #281-1.
⊖ #863-5 x 3
Depress Mirror down lever B13-6 downward to couple it with the fork of B11-6.

[A] After installation, disengage #352-2 from #281-1, and then use the eccentricity of #353-6 to adjust the position of #352-2.

#352-2 should be positioned in the condition that there is no clearance between #352-2 and #281-1, as well as between #281-1 and #287-6.
See Fig. 23-1

[C] Make sure of the smooth movement of mirror with B11-6 released.

Check the proper function of shutter brake, with B13-6 and #281-1 moved.

[C] Brake torque

Use Torque gauge J5019 to measure the engaging / disengaging torque of #352-2.

Standard engaging torque
G=200 - 450g

Standard disengaging torque
G'= more than 90g

18. Shutter Brake B37 Installation

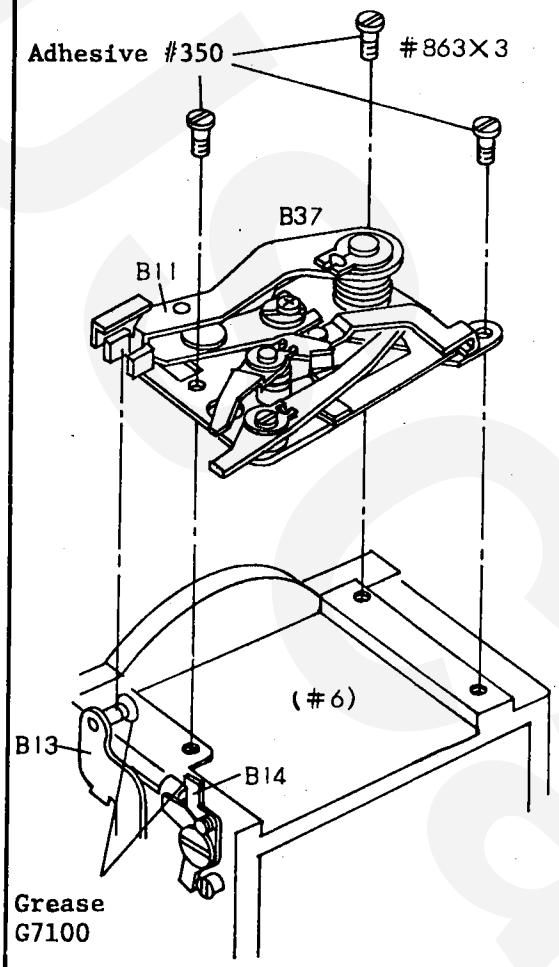

Front plate #6
↓
Shutter brake B37

Put #352-1 between Brake spring base #285-1 and Brake spring #286-1. Set Mirror-down lever B13 at down position, then engage with the fork of Mirror charge lever. (B11).
Fix with three screws (#863).

To position #352-1, pull out #352-1 from the brake spring and let #352-1 contact B14, then rotate #353 (see fig.22) until 1.0mm space is obtained between the tip of #352-1 and the bottom edge of #6.

Charge the mirror by B11, then release by B19 to check proper mirror-up operation

Set mirror at the down position by #328 and check a proper shutter brake operation.

Also check that shutter brake can be released by #281.

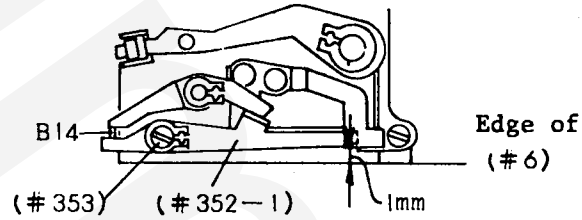

fig.22 MD signal middle lever(#352-1) positioning

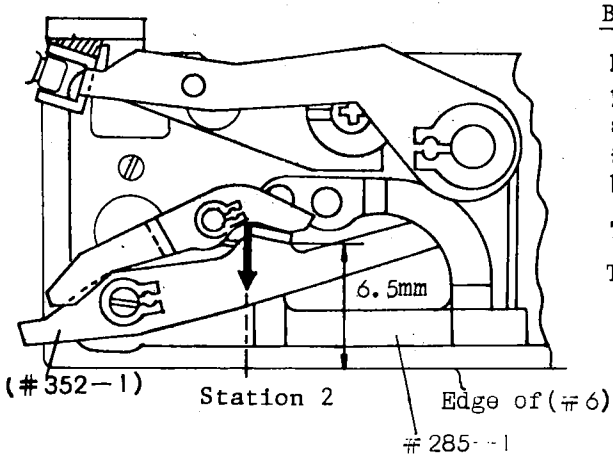

fig.23 Brake power measurement

Brake Power for Signal Middle Lever

Measure the brake power with J15019, pulling in the arrow direction at the station 2 where the bending edge of #352-1 locates 6.5mm up from the bottom edge of base plate (See fig.23)

The brake power to be 200g±50g

To adjust brake power, bend #284-1.

19. Mirror-switch adjustment

J19028-1

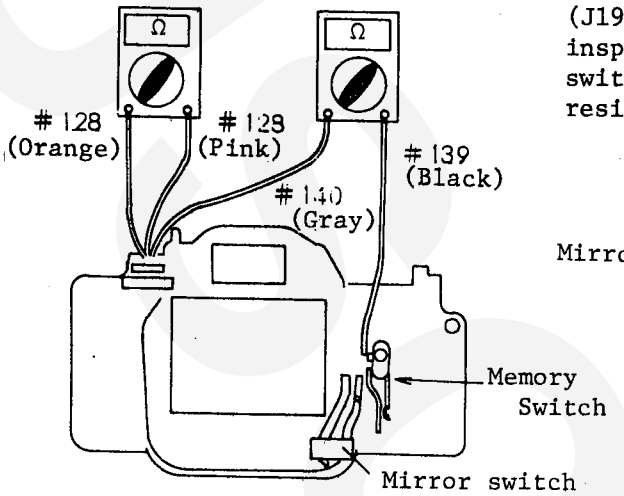

fig.24

Connect the lead wires with Contact efficiency & insulation tester IE-2A2 (J19028-1) as depicted in fig.24, and inspect on-off timings of both mirror switch and shutter switch. Electrical resistance of B9 to be 10MΩ or more.

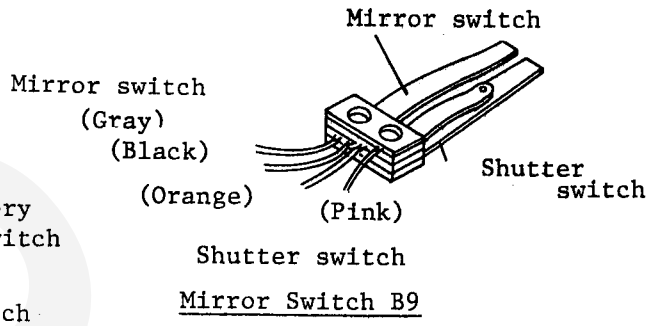

Mirror Switch B9

Switch ON-OFF Timing

After mirror charging, release mirror pressing B10 up by finger. lower B10 gradually. and adjust the clearance between #927 and #928 by turning #930 so that mirror switch changes from ON to OFF while on interval between Mirror holder pin A(#307) and Mirror-up lever(#322) is 0.2 to 0.1mm.
(Visually inspect the interval. Refer to fig.25. 26)
Apply adhesive #201 onto #930.
Be sure not to tighten #930 excessively.
Visually check that shutter switch changes from OFF to ON while #307 is shifting up 1.1mm away from its contacting point with #322 (no clearance between the two) (See the chart below)

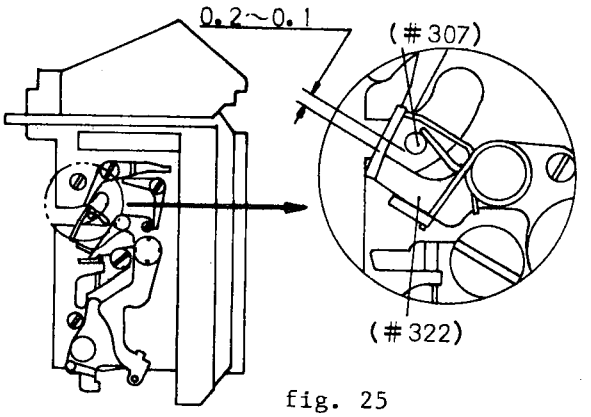

fig. 25

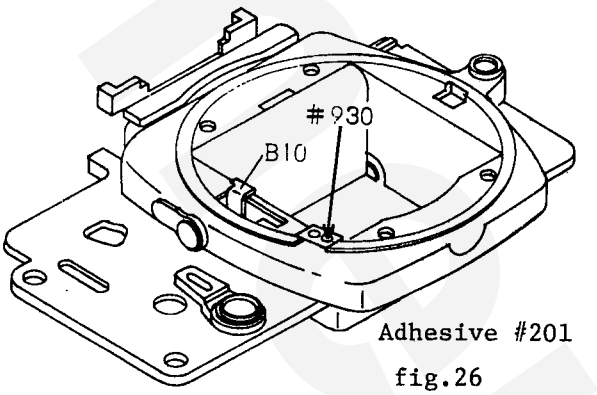

fig.26

Position of Mirror / Switch	down-position	During mirror-rising operation				up-position	return to down-position
		-0.2 (#322)	-0.2 (#307)	0	+1.1		
Mirror Switch	ON	ON →	OFF	OFF			ON
Shutter Switch	OFF			OFF →	ON	ON	OFF

20. Air Damper installation

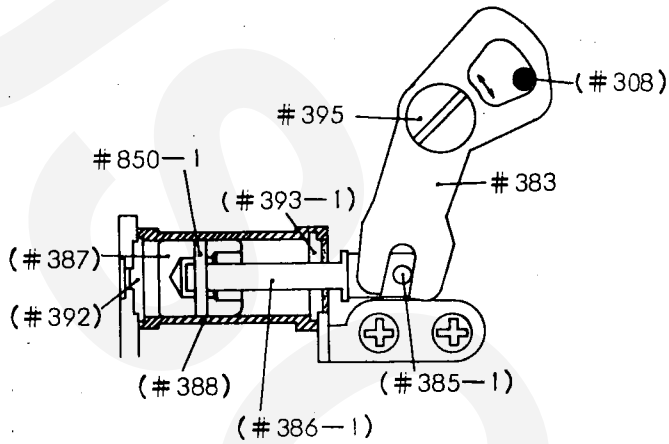

fig.27 Strucrure of Air Damper

Air Damper Mechanism(B20)

Shock and sound, which occures at the mirror up or down position striking the associated parts, are minimized by cylinder operation of B20 via #383 which actuates air damper connecting shaft (#386-1) fore and aft by receiving the shock of mirror operation.

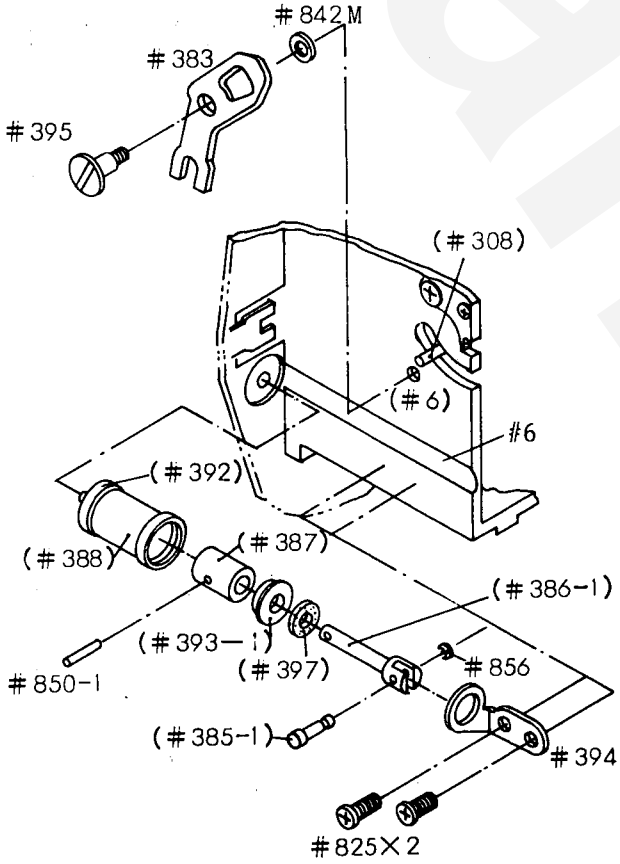

20. Air Damper Installation

Front plate(#6)

↓

Air damper(B20)

Put #385-1 into #386-1 and fix with #856 as illustrated. Install #397, #393 and #387 in order onto #386-1, then insert #850-1 into #386-1 through #387 aligning two holes.
Insert the above assembly into #388, using care not to drop #850-1.

↓

Air damper holder(#394)

⊕ #825x2 (used for centering)
Position #388 along groove of #6

↓

Washer(#842M)
Air damper lever(#383), ⊖ #395

Put the fork of #383 astride #385-1, and angular hole of #383 around #308 respectively.
Manually operate the mirror and check for smooth operation of mirror, free from air damper's rubbing or jam.
Change the direction of #6 and check mirror operation again.

21. Roller lever(B7), Brush coupling gear(B25) Installation

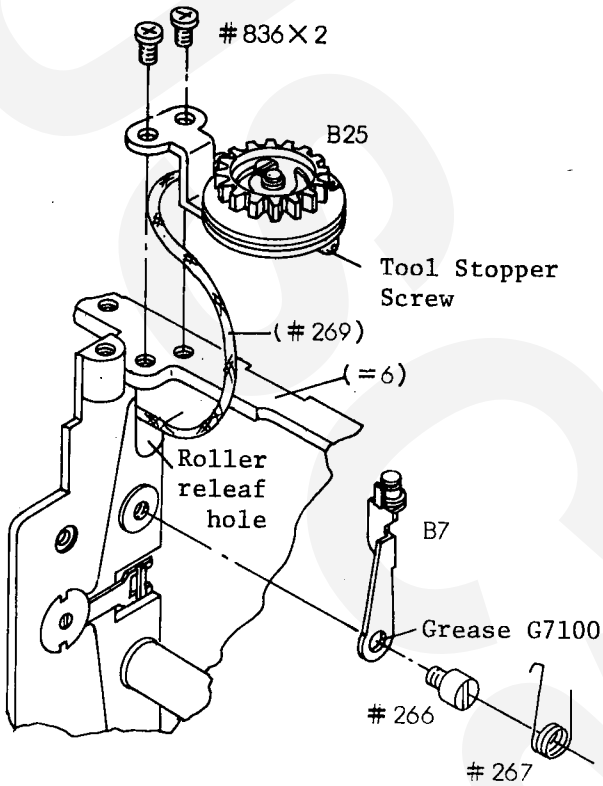

Front plate(#6); rewind-side

Front plate #6

↓

Roller lever B7, Screw(#266)

B7 should not interfere with #6 due to excessive back-and-forth play

↓

Roller lever spring(#267)

Refer to fig.28 for spring installation.

↓

Brush coupling gear(B25)

Before installing. inspect for smooth operation and no abnormal sound of spring.

Pass thread #269 through roller releaf hole on #6. using care not to reduce the ring of 2mm dia at the end of #269

Install #269 between Roller(#262) and thread retaining plate(#264). (See fig.28)

↓

⊕ #836x2

Be sure not to remove tool stopper screw before Bayonet #202 is installed.

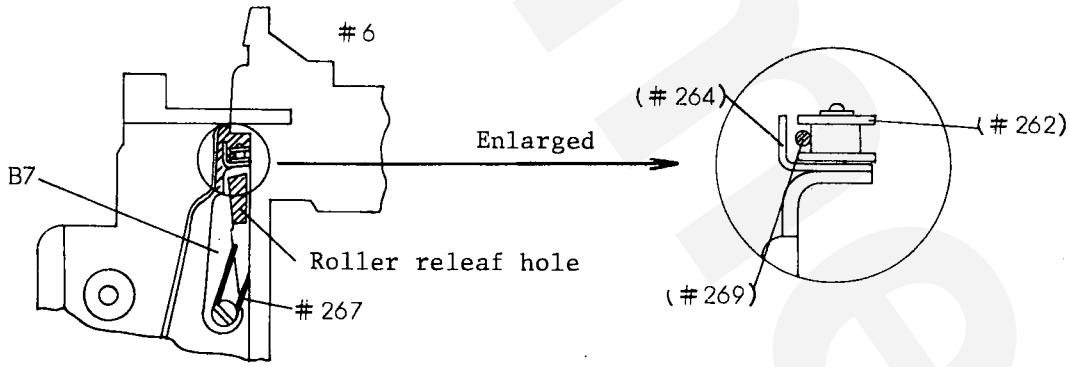

fig.28 Back view of Front plate #6; rewind-side

Thread(#269) knotting

If #269 is unknotted, knot as depicted in fig.29, using care to tighten the knot securely.

The length of #269, from the cut in pulley on B25 to the knot to be 116±0.5mm

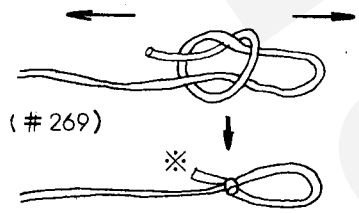

fig.29 #269 knotting

20-1 Air damper installation

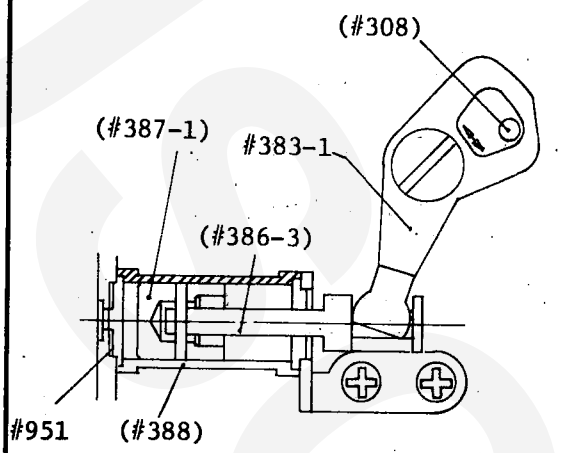

fig. 27-1

Air damper mechanism

The mechanism remains exactly the same as earlier.

Front plate #6

↓

Air damper B20-1

[R] Insert #386-3 into #387-1 through #397-1 and #393-2. And put #850-1 into the access hole of #387-1, aligning the hole with that of #386-3.

Next put the sub-assembly into #388 ; that is Air damper B20-1.

↓

Air damper lever screw #394
⊕ #825-5 x 2 (used for centering)

[R] Place B20-1 along the depression of #6.

↓

Washer #842M, ⊖ #395
Air damper lever #383-1

[R] Hook the fork of #383-1 to the neck of #386-3, and the squared hole of #386-3 to Mirror holder pin #308.

[C] Make sure of the smooth movement of damper in the mirror lifting / returning action...the damper should not have a catch or friction. Check it once more holding the front plate upside down.

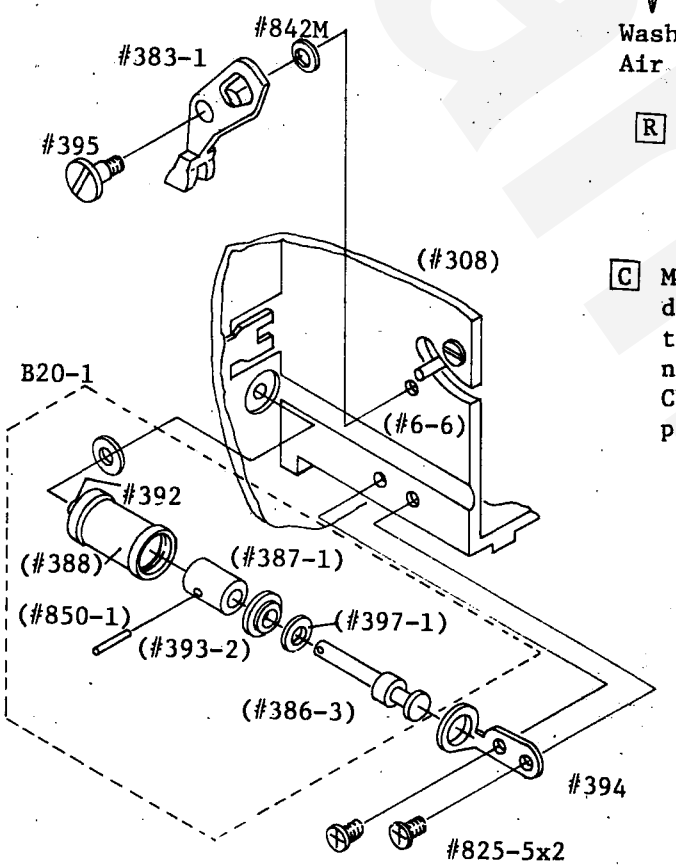

22-1 Front cover / Coupling ring / Bayonet installation

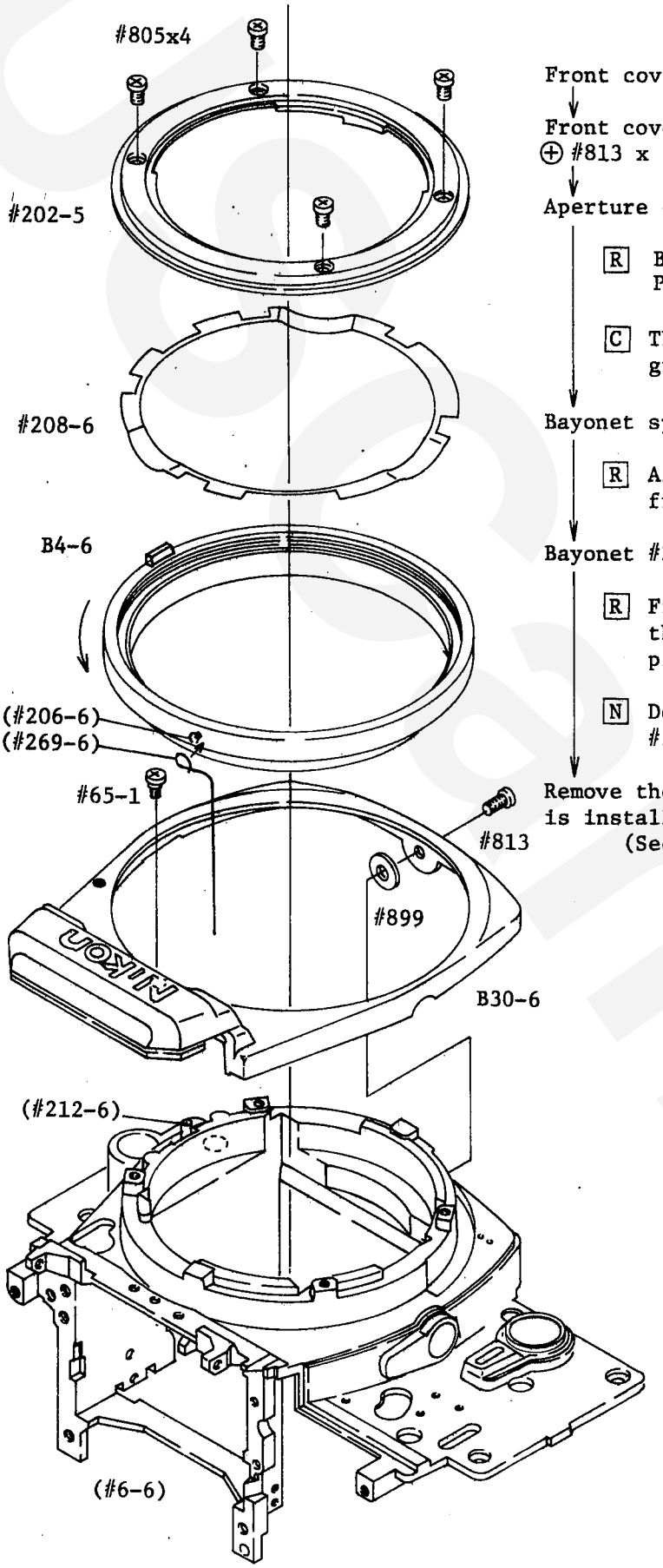

Front cover (#6-6)

↓

Front cover B30-6
⊕ #813 x 1, ⊖ #65-1 x 1

↓

Aperture coupling ring B4-6

[R] Bind thread #269-6 to Pin #206-6

[C] The thread routes through the groove of #206-6.

↓

Bayonet spring #208-6

[R] Align the cutouts with the front plate.

↓

Bayonet #202-5 ⊕ #805 x 4

[R] Fix #202-5 after making sure that #208-6 is positioned in place.

[N] Do not catch #208-6 under #202-5.

↓

Remove the tool stopper screw, which is installed in the disassembly sequence.
(See Fig. 30, Page 21)

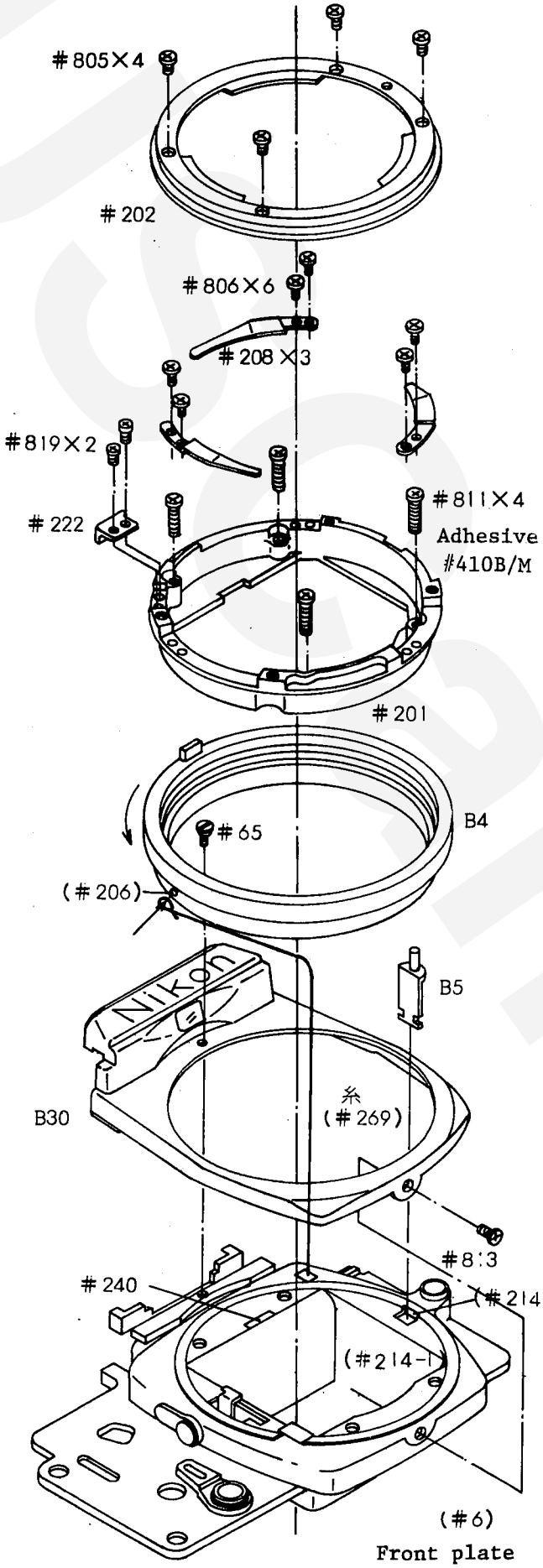

22. Bayonet Installation

Front plate(#6)

↓

Front cover(B30): ⊕ #813x1
⊖ # 65x1

↓

Aperture coupling ring(B4),
Lens release lever(B5)

↓ Insert B5 into fork of #214-1
Install Thread(#269) securely
into the groove of thread
supporting pin(#206).

Bayonet mount(#201) ⊕ #811x4

↓ Use care not to catch thread
Temporarily loose fit with
screw

Coupling ring stopper(#222)
⊕ #819 x 2

↓ Turn B to the position where
#222 can fit in B4, and hold
with finger

Screw (⊕ #811)x4

↓ Secure #201 tightly where B4
rotates most smoothly

Bayonet spring(#208), ⊕ #806x6

↓ Position #208 flush with outer
circumference of #201 or at
least 0.2mm inside.

Bayonet #202, ⊕ #805x4

↓ Check B4 for smooth rotation

Remove tool stopper screw
(See fig.30)

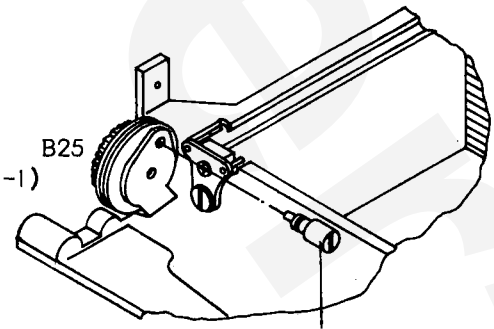

fig.30 Tool Stopper Screw

23. Aperture Coupling Piece Positioning

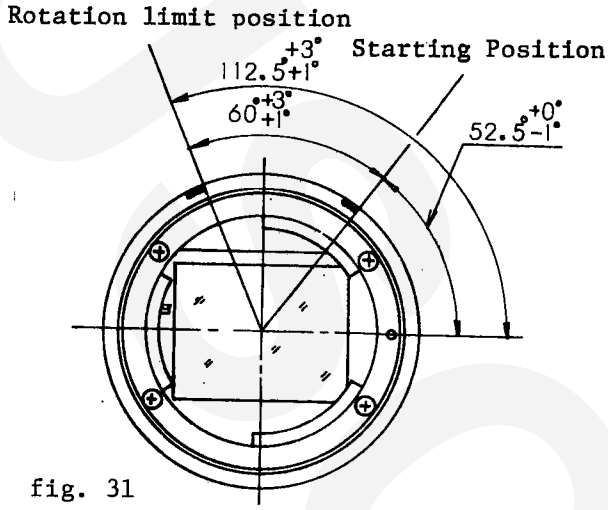

fig. 31
Positioning standard of aperture coupling ring

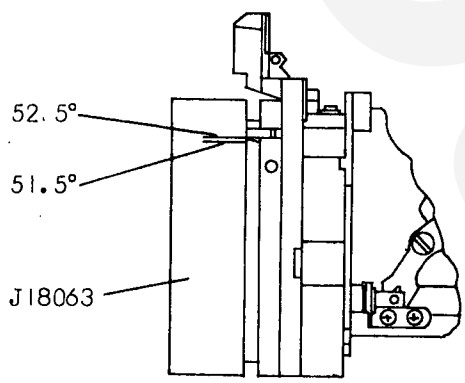

fig.32
Aperture coupling piece starting position

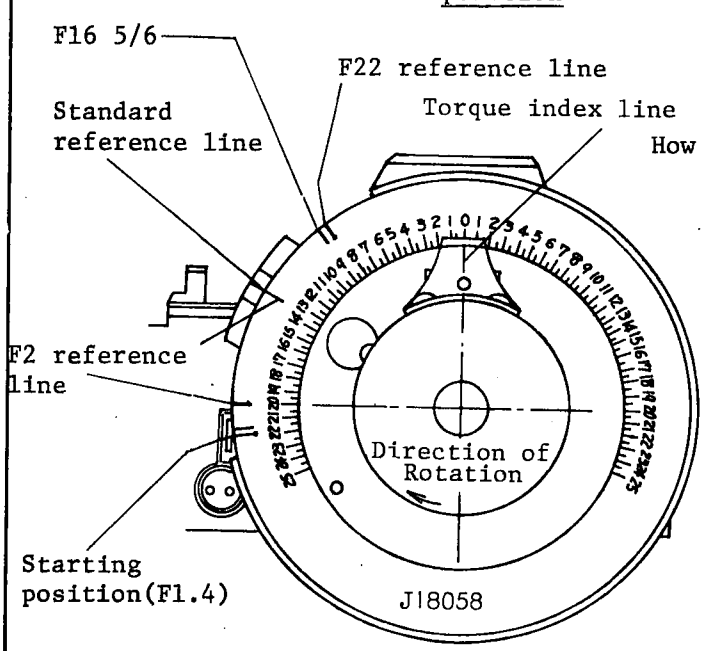

Standard for Aperture Coupling Piece Starting Position and Maximum Angle of Rotation

Starting position: 52.5° $^{+0°}_{-1°}$

Maximum angle of rotation: 112.50 $^{+3°}_{+1°}$

Tool: J18063

Refer to Figure 31

Starting position checking

Mount F-number window checking gauge (J18063) onto bayonet.

Check that the right edge of #209 (lens release pin-side) is between two scales (52.5° & 51.5°) on J18063. If out of the scales, adjust by dislocating #222.

Refer to fig.32 and Page(22).

Torque Standard

When rotating toward F22

at F16 5/6: 950g·cm or less

When rotating back toward max aperture

at F16 5/6: 350g.cm or less

at F2 : 100g·cm or less

F1.4 reference line should surely return to align with the standard reference line.

How to measure

Mount the tool No.J18058 onto the bayonet. Align each reference line with the standard reference line, then rotate the tool's ring further to measure the torque when two lines separate.

24. Diaphragm actuating lever positioning

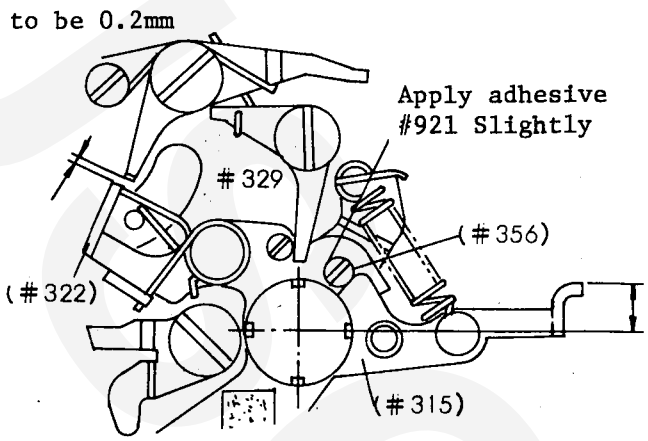

fig.34 Side View of Front Plate; Wind-up side

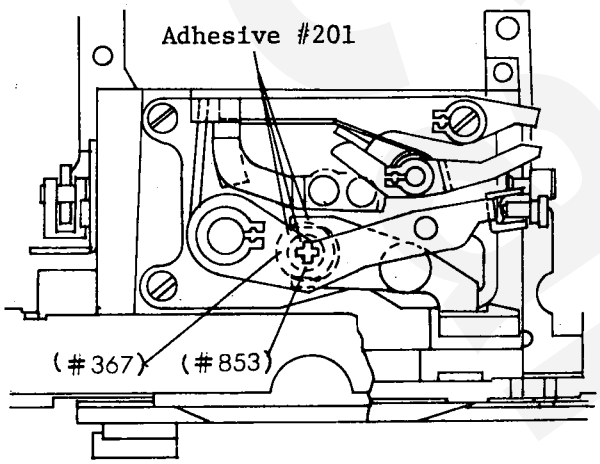

fig.35 Bottom view of Front Plate

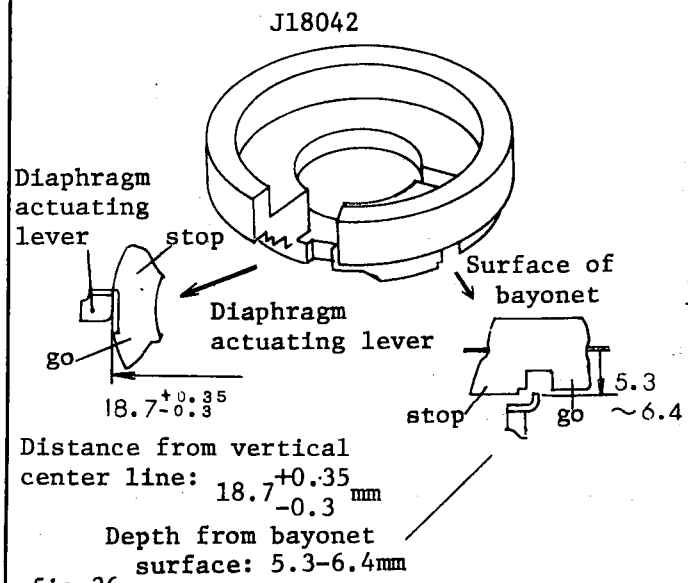

fig.36

Height of Diaphragm actuating lever

Measure the height of Diaphragm actuating lever with Aperture lever positions gauge (J18004)
See the illustration below

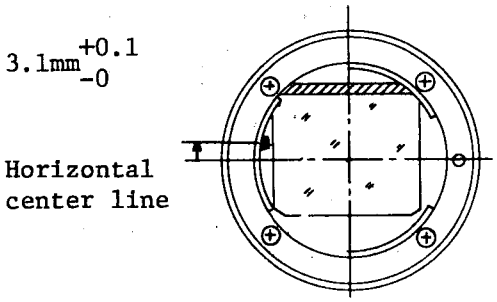

(1) Standard height when mirror charged
$3.1^{+0.1}_{-0}$ mm

If out of standard, adjust by rotating Eccentric pin #356 (See fig.34)

After adjustment, slightly apply adhesive #921 to #356. Use care not to exude adhesive to #315

(2) Standard height when mirror released
$3.1^{+0.4}_{\pm 0.15}$ mm

If out of standard, loosen #853 and adjust by rotating Down lever eccentric axle(#367).(See fig.35) Apply adhesive to #353, #362, and #367 respectively.

(3) The difference between the above two values (1), (2): 0.15mm or more

Be sure to provide 0.2mm clearance between Mirror-up lever(#322) and Mirror-up stop lever(#329) in normal mirror down position. See fig.34.

Position of Diaphragm actuating lever

Check the distance from vertical center line and the depth from bayonet surface with Aperture lever depth gauge J18042 (See fig.36)
The tip of diaphragm actuating lever should contact the "stop" side of J18042, and should not contact with "go" side.
Adjust the lever position by bending Diaphragm actuating lever.

25. Front Plate Installation

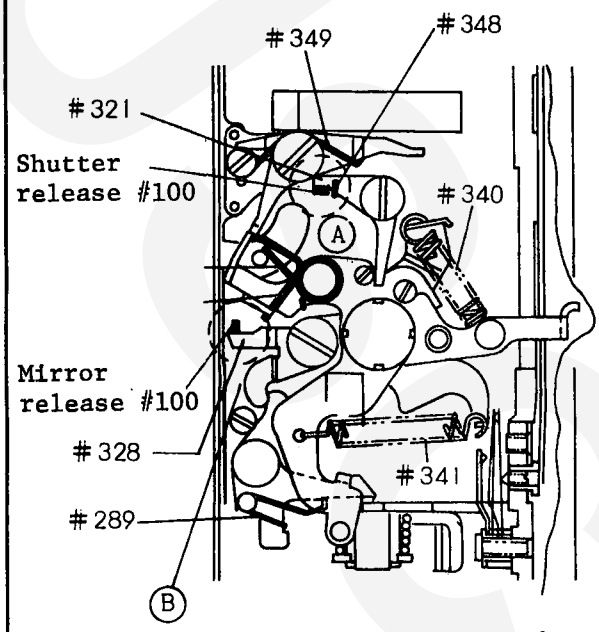

fig.37 Front plate, Mirror box side

Body

Cock the shutter, release the blank exposure prevention lever and set the film-advance lever halfway in the winding direction before front plate installation.

Front plate

Charge the reflex mirror

Install Front plate, being careful to ensure proper engagement at the areas (A, B, C, D, E, F) specified in Figure 37, 38, 39.

Engagement

A(Shutter release lever(#321)
Shutter release of #100

B(Signal lever(#328)
Mirror release of #100

C(Release lever guide pin(#879)
Sea-saw lever(#518A)

D(Self-timer gear B(#19)
Self-timer shaft of #100

E(Brake release lever(#281)
Mirror charge pin collar(#35)

F(Motor switch coupling lever(#25-1)
MD signal middle lever(#352-1)

Press front plate in the arrow direction in Fig.40, and secure with six screws (#810x5, #817x1) in the sequence shown in Figure 40.

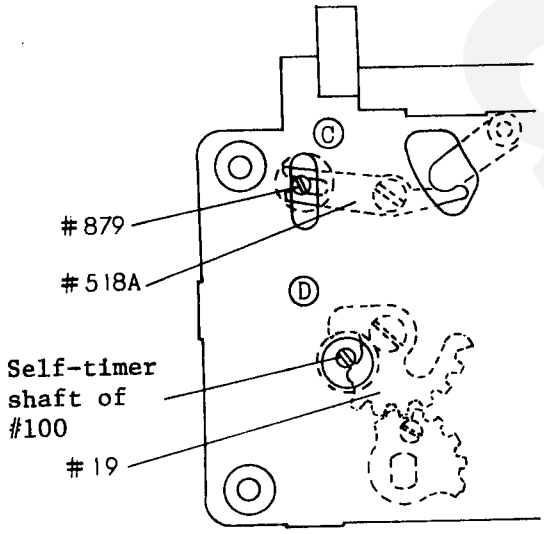

fig.38 Front plate, self-timer side

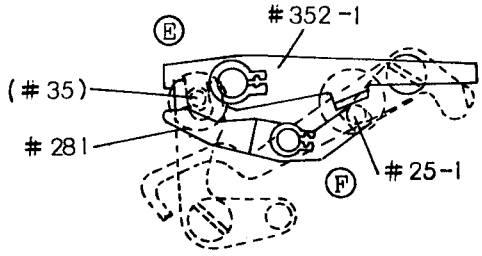

fig.39 Front plate, body bottom

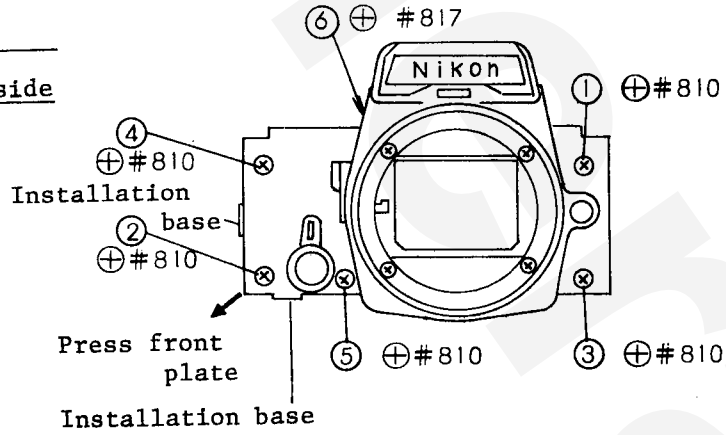

fig.40 Screw tightening sequences ① - ⑥

25-1 Front plate installation (in the camera body)

fig. 37-1

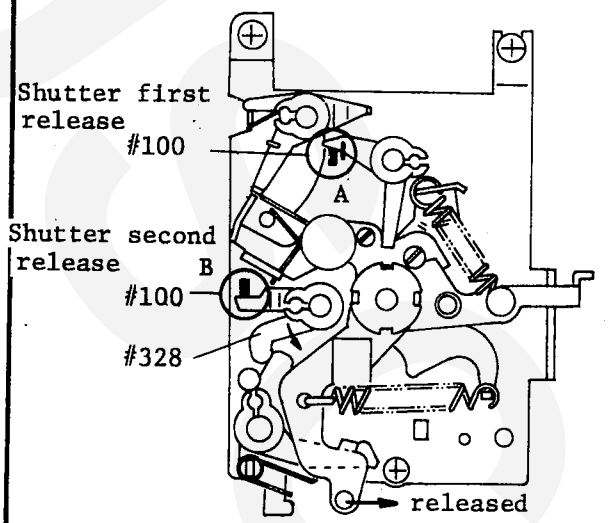

Body (#1-5)

[N] The shutter is cocked, and the film-advance lever is in the stand-off position.

Front plate ⊕ #810 x 5 ⊕ #839A x 1

[N] Mirror-down lever B13-6 is released (See Fig. 37-1). Shutter brake is released. (See Fig. 38-1)

[R] Engagement position A B C D E are refered in Page 24.
F (Motor switch coupling lever #25-3 / MD take-up signal middle lever #352-2) is refered in Fig. 38-1.

[R] Signal lever #328 should be placed downwards in the direction of arrow, Fig. 37-1.

First put Front plate B-6 into the camera body, holding it upwards (there is a slight distance between the bottom of B-6 and the bottom plate of camera body), and then depress B-6 downwards in place, with the film-advance lever stroked.

[R] Tighten Screws in the sequence shown in Fig. 40, Page 24.

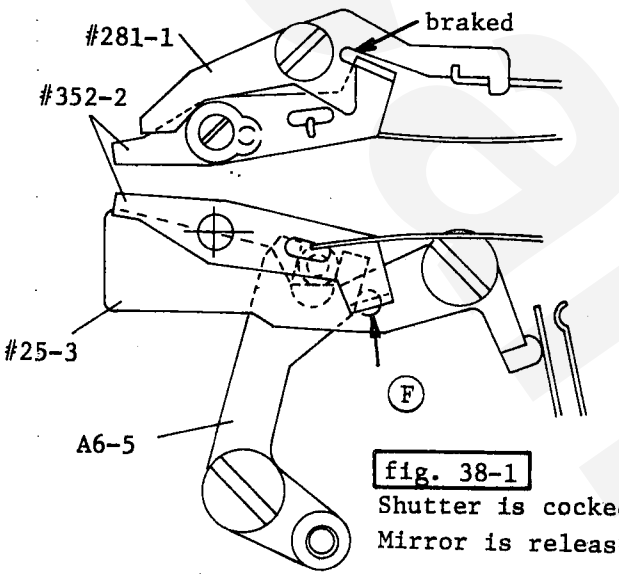

fig. 38-1
Shutter is cocked.
Mirror is released.

fig. 38-2

Start film-advance. ⟶ Release the brake.

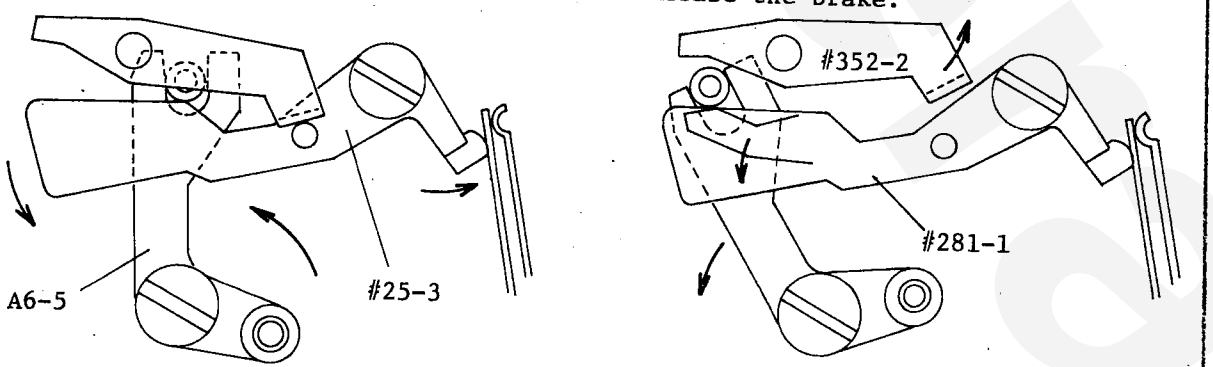

Mirror box lubrication

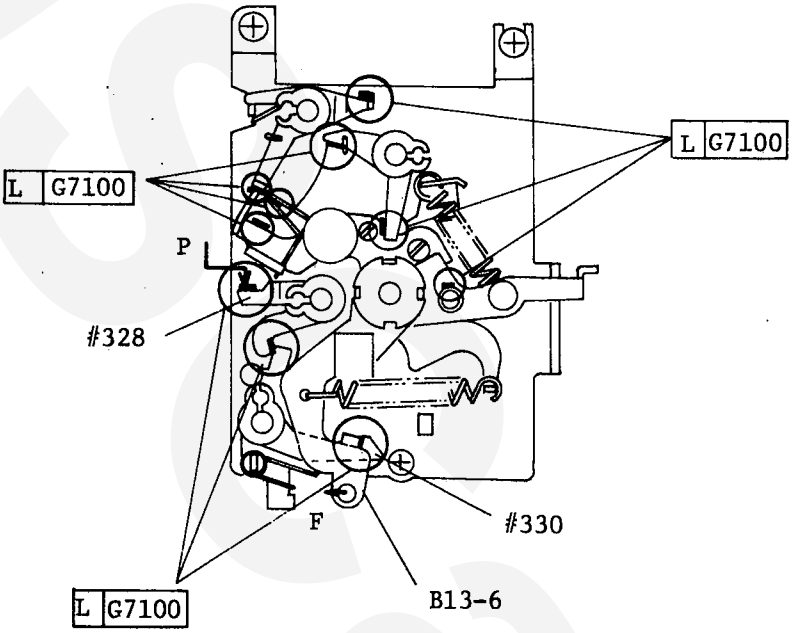

Shutter brake lubrication

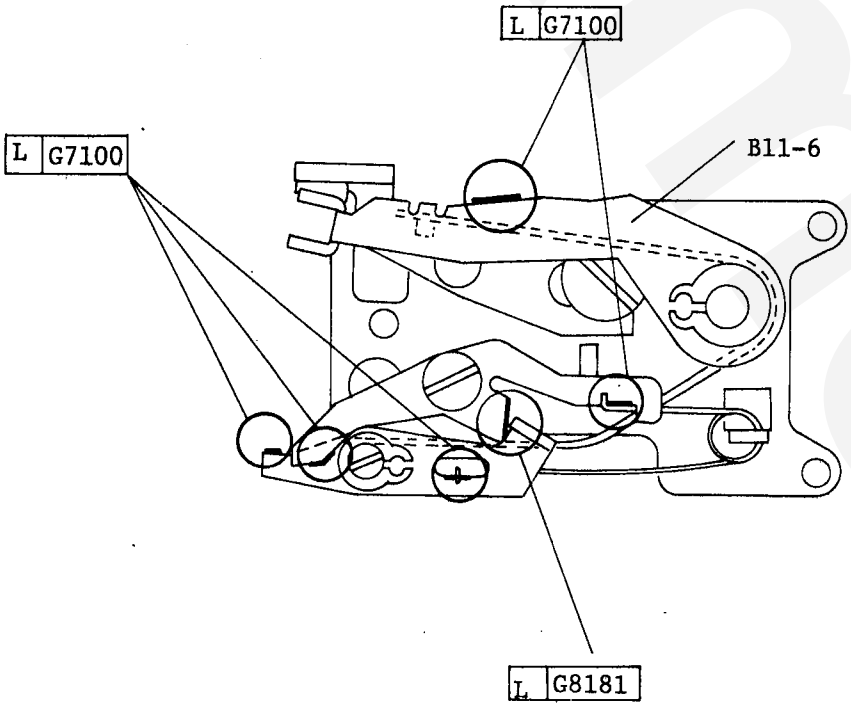

26. Mirror Position to Release Shutter

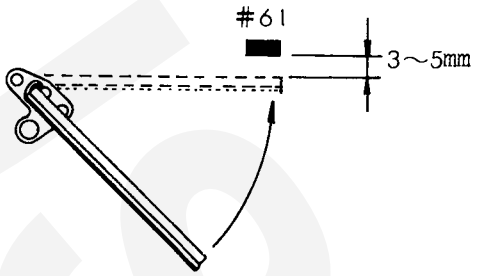

fig.40

Clearance of 3 - 5mm should be left between mirror buffer #61 and the mirror in the highest position to release shutter.(See Figure 40)

Be careful not to scratch or leave finger prints on the mirror

Adjust the mirror position by activating shutter release lever (#321) up and down with eccentric pin(#356).
(See Figure 41)

Apply adhesive on #356, being careful not to exude the adhesive on #321.

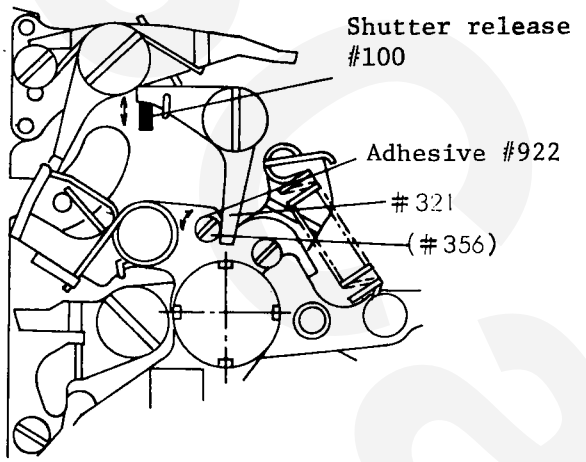

fig.41 Front plate, film-advance lever side

ⓐ looseness: within 1.0mm
ⓑ Inclination: within 0.5mm

27. Inspections after Front Plate Installation

Body Back Distance Check:

Tools: J18001-1, J19004
Standard: 46.67± 0.02mm(at outer rails)

Self-Timer Lever Operation Check:

8 - 14 sec. delay: Adjust with eccentric pin shown in Figure 42.
Cancellation: Cancellable when the lever is returned to the position ready for memory lock operation

Lever looseness: Within 1.0mm
(See Figure 42)

Blank exposure prevention lever check:
Inspect #26 and A3 for proper operation through tripod screw mounting hole.

Mirror charge check:
Attach the tool(J18065), set its aperture setting to F16 and wind the film-advance lever several times, fast or slowly;
mirror should be surely charged regardless of winding speed.

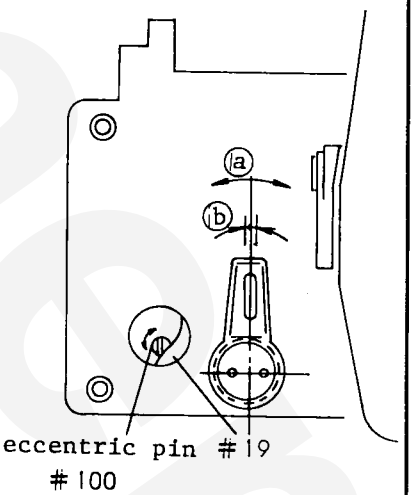

fig.42

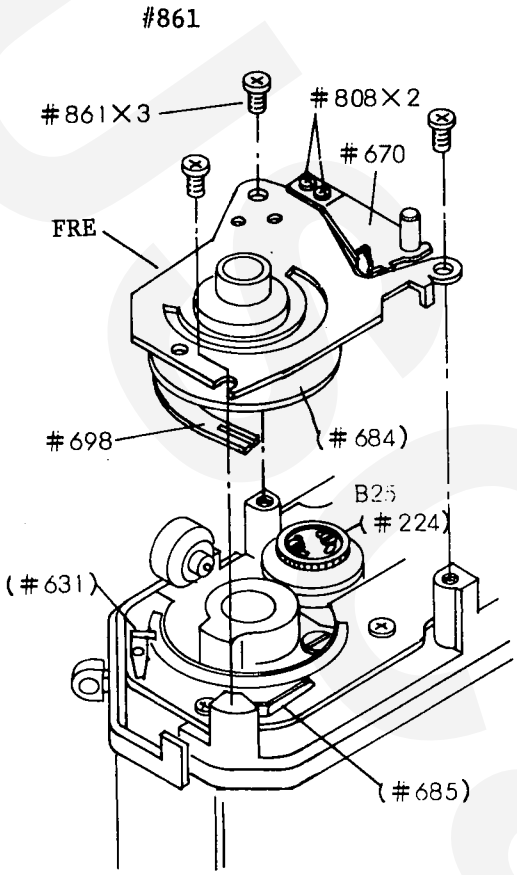

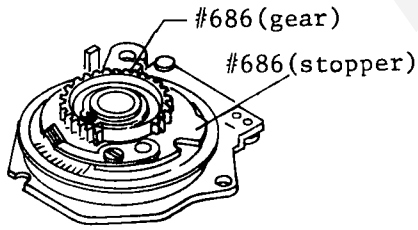

fig.43 FRE, bottom view

Digital Volt-Meter (J9003-1)

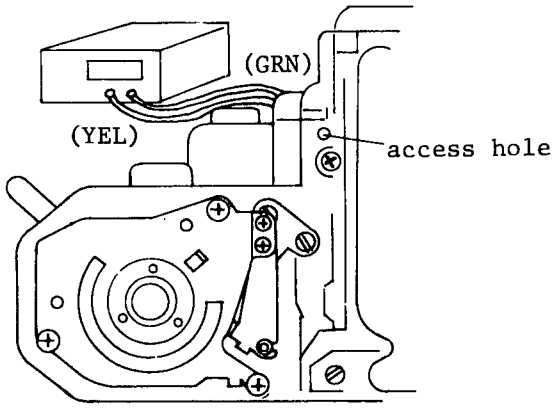

fig.44 Body, rewind-knob side

28. FRE Installation

Cares before installing FRE
Properly position B25 with tool J15146, removing slack.

Alcohol-clean each contact below

Body: Brush A(#685)
FRE Printed Circuit(J)

FRE: Brush B(#698)
FRE conducting plate

Body
↓
FRE: Install lens tool(J18065), set its aperture ring at the click between F1.4 and F2, and install FRE with three screws #861 so as to leave no clearance between #631 and #686.
(See Figure 43, 45)

Be careful not to bend #685 and #698

Check Points

Rotating the aperture ring of J18065, inspect the gear slack between #224 and #686 to be within 1/6 EV (0.15k) deviation with tester J9003-1. If eccessive, shift FRE position until allowable slack obtained. If still excessive, readjust the B25 positioning.

Brush A(#685) should contact #684 at the middle of the circumference of #684

#631 and #678 should not contact each other. (See Figure 45)

Roller lever(B7) should not move before #686 contacts #631. Inspect through access hole in Fig.44.

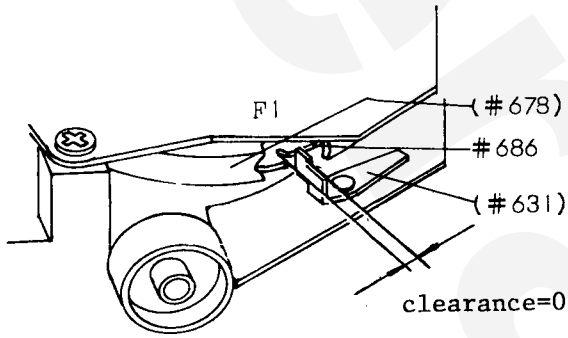

fig.45 Synch terminal

29. FRE Positioning

Aperture ring of J18065

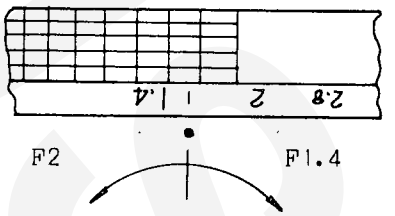

Brush gear(#686) should move instantly

#686 should not move

fig.46 1/3 stop click(F1.4 1/3)

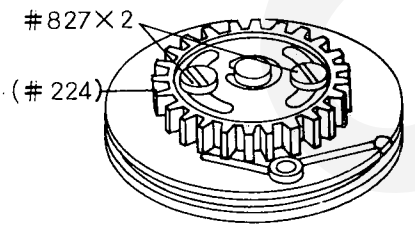

fig.47 Brash coupling pulley

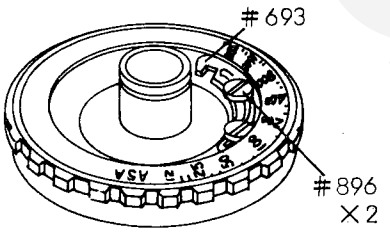

fig.48 ASA dial

Body

Mount the tool J18065 on the body and rotate the aperture ring from F1.4 toward F2 to set to the click, 1/3 stop exceeding F1.4.
See Figure 46

Check Points

When rotating back to F1.4, #686 should not move, which means no clearance left between #631 and #686

When rotating toward F2 out of 1/3 click stop, #686 should immediately move. If improper operation observed, remove ASA click spring(#670) and two screws(#808), loosen two screws(#827) and adjust the positioning of #224. If still unsatisfactory, readjust FRE positioning to set the slack between #224 and #686 within 1/6 EV deviation.

30. FRE Resistance Adjustment

Connect leads #130(yellow, green) to tester J19003-1 as illustrated in Figure 44. Measure the resistance at the settings shown in the table below.

If out of standard, slide ASA coupler(#693) by loosening two screws(#896) until standard resistance obtained.

Check Points

FRE resistance should vary smoothly free from needle jumping.
One stop difference = 0.9kΩ

Resistance should be within standard,regardless of rotational direction of aperture ring

Note: When changing ASA setting, depress the checker switch so as not to contact against FRE.

FRE resistance standard

	Aperture	ASA	Compensa-tion	Standard (kΩ) upper limit	Center	Lower limit
1	1/3 click	4000	-1		0.45	
2	1.4	4000	-1			
3	2	4000	-1	1.15	1.05	0.95
4	5.6	4000	-1	4.2	3.75	3.3
5	5.6	100	0	10.4	9.45	8.4
6	2.2	12	+2	< ∞	16.65	14.9

Note:
1) No resistance difference permissible between 1 & 2
2) Resistance difference between 2 & 3 to be 0.6 ±0.1KΩ

31. FRE Installation

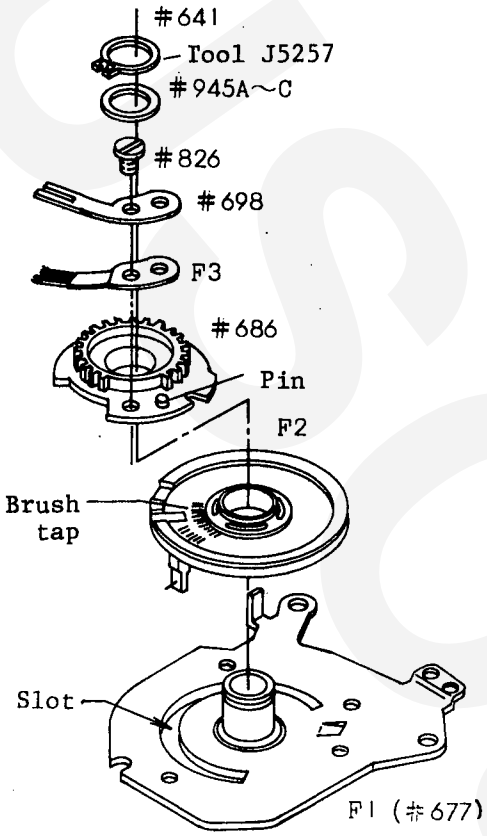

To Install Brush

ASA dial mount (F1)

↓

FRE ring(F2)

Be careful not to directly touch FRE pattern
Clean the tapped area with a mixture of alcohole and ether

↓

Brush gear(#686) Washer(#945 A, B, C)
Snap ring(#641)
#686 should rotate smoothly by adjusting with one of #945A, B, C

↓

Brush A(F3), Brush B(#698) Screw(#826)

Set #698 on top of F3 and install both together, aligning the holes with pin on #686

All of six wires of F3 should firmly contact on taps of F2. (Ref. Figure 49)

Two contact plates of #698 should not disengage from FRE printed circuit (J)

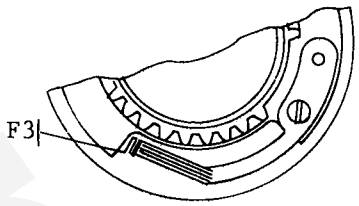

fig.49 F3 position

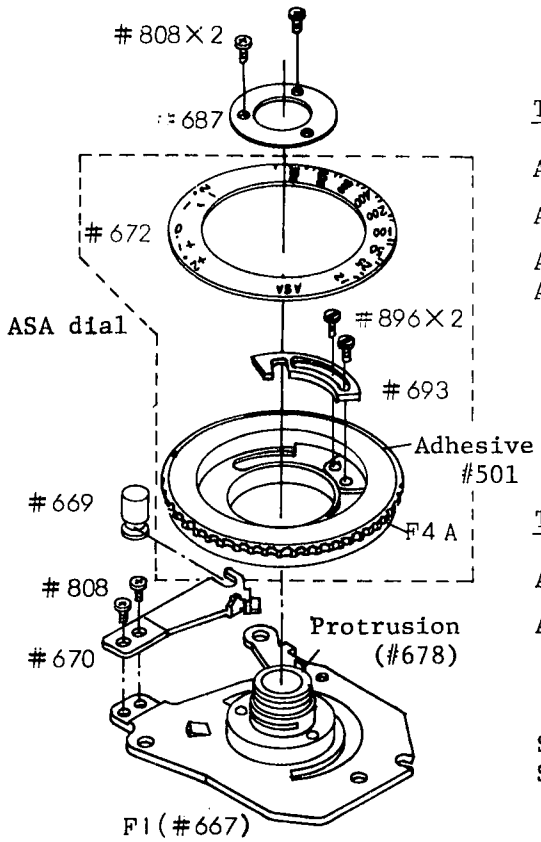

To Install ASA dial(#672)

ASA dial(F4A)

↓

ASA coupler(#693), Screw(#896x2)

↓

ASA dial (#672),
Adhesive #501

Setting ASA click plate (#676) at the center click, fix #672 with its "0" setting aligned with the index.

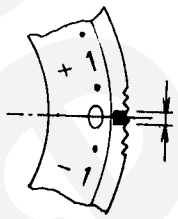

To install ASA dial (F4)

ASA dial mount(F1)

↓

ASA dial(F4A), #896x2, #693, #672

Protrusion on #678 to be aligned with the slot in #693

↓

Scale attaching ring retainer(#687), Screw(#808x2)

Inspect #687 for smooth rotation

32. Installation of Pentagonal Prism, Eyepiece and IC Printed Circuit

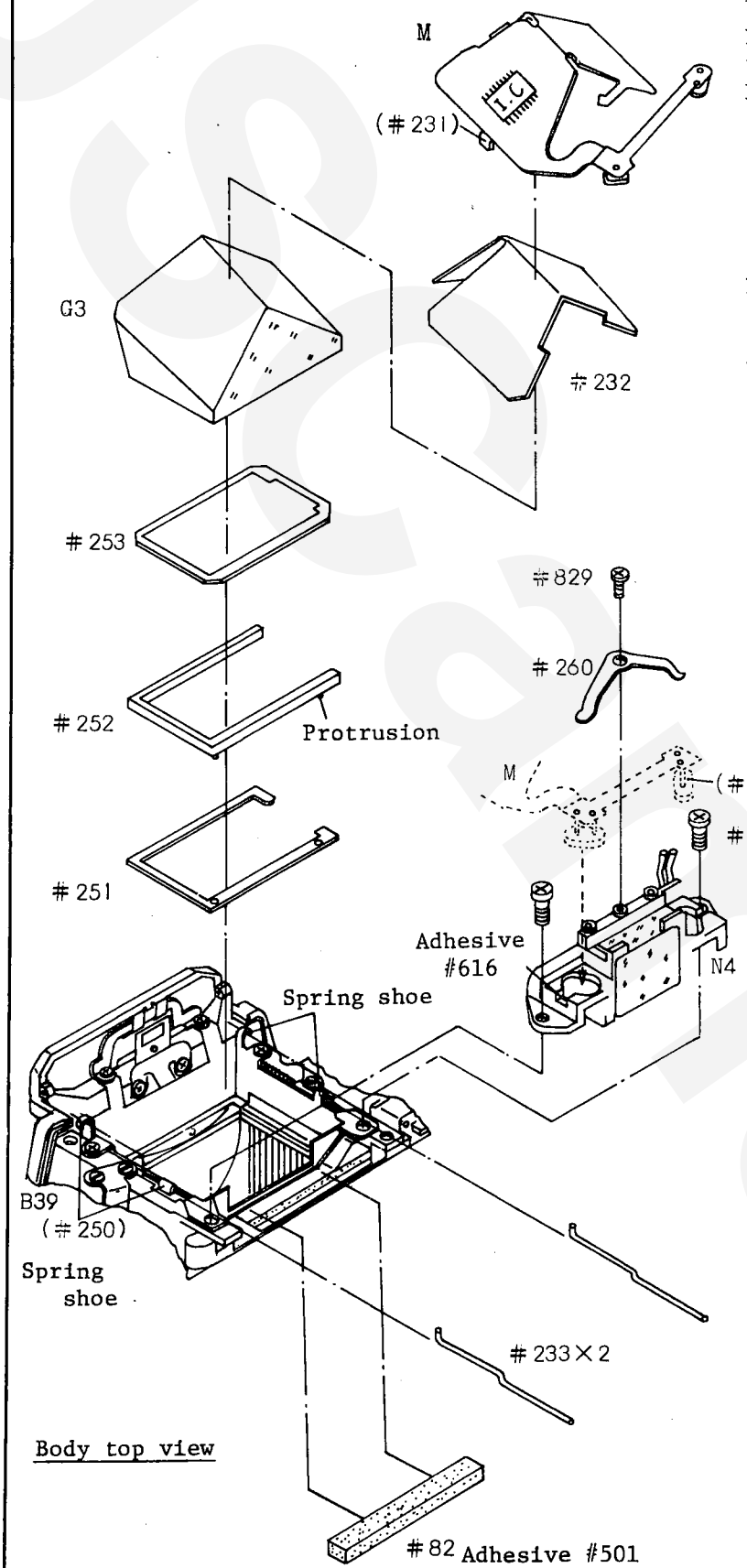

Body top view

Prism box(B39)
↓
Finder field frame(#251)
Spacer(#252)
Prism mask(#253)

Install each part, being careful of their direction. Positioning holes in #251 should align with pins on #252

↓
Pentagonal Prism(G3)

Clean before installing

↓
Prism retainer(#232)
IC printed circuit(M)
↓
Spring(#233x2)

Engage the spring in following sequences.
Eyepiece-side spring shoes of #250
↓
Prism-retaining plate(#231)
↓
Bayonet-side spring shoes of (#250)
Be careful not to scratch the prism.

Prism box(#250) of Front Plate(#6)
↓
light-tight(#82)
↓
Eyepiece mold(N4),
Screw(#817)

Clean the prism-side surface of eyepiece lens

↓
Photo diode(#258x2)

Fit into holes in N4

↓
SPD printed board retainer (#260)
Screw(#829)

Apply adhesive at the cut in N4 to secure #258 on N4

33. Fresnel Screen and Mirror replacement

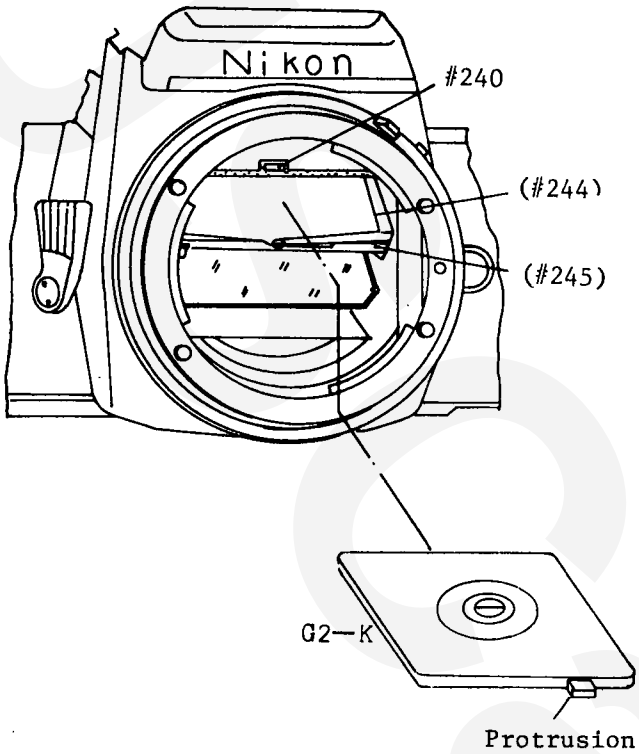

To replace Fresnel screen(G2)

To remove G2, pull screen lock spring(#240) toward you, and screen frame(#245) falls down, ready for G2 removal

Hold the protrusion on G2 with tweezers to prevent G2 from scratch.

Cleaning G2, place G2 on #245 with split plane up and the protrusion toward you.

Press up #245 until #245 locked with #240, being careful of G2 not to disengage from screen frame spring (#244).

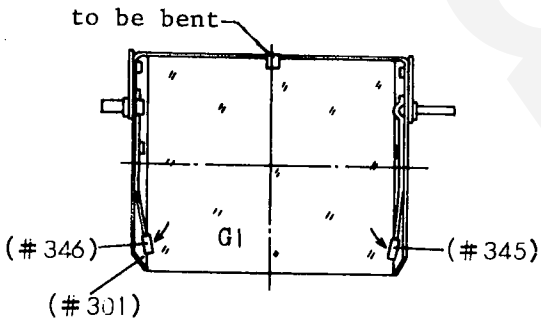

fig.51 Mirror holder B26

To replace mirror(G1)

Remove Mirror(G1) by pressing mirror holder A(#345) and B(#346) with a small screwdriver in the direction of arrow (See Fig.51).

Reinstall G1 in place as follows. Clean the faying surfaces of G1 and mirror holder(#301)

↓

Apply adhesive #501 at two places on #301 (See Fig.52)

↓

Place mirror in place

Be careful not to transform #345 nor #346 and not to scratch mirror

To make sure the proper mirror installation, look through view-finder for blur-free image at four corners.

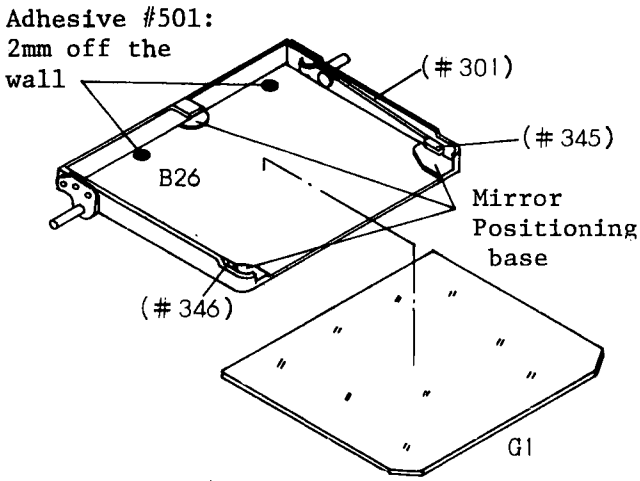

fig.52 Mirror replacement

34. Adjustment of Mirror 45° angle, Infinity focus and Picture Angle

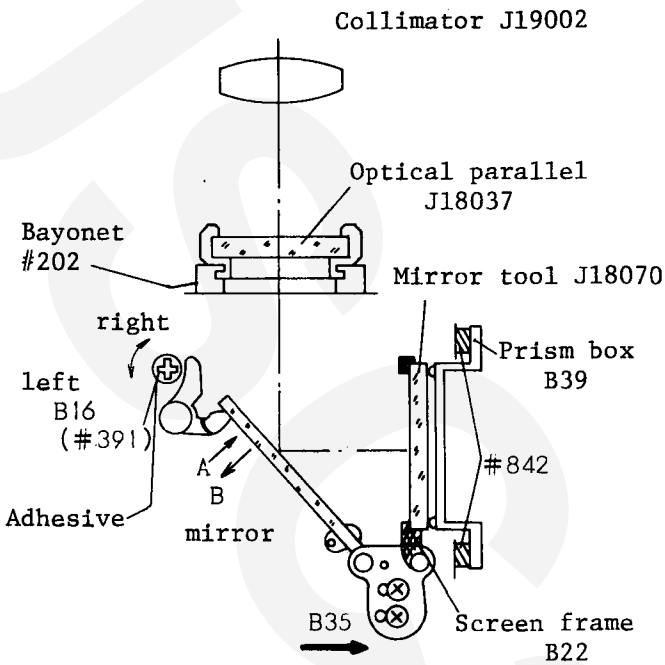

fig.35 Mirror positioning(FRE-side view)

To adjust mirror 45° angle

Tools: Optical parallel J18037
mirror tool J18070
Collimator(f=500mm) J19002

Set J18037 on bayonet, install J18070 in screen frame (#245) and look through collimator J19002 to see if the images both on J18037, and on J18070 align. If not aligned, adjust as explained in table below. After adjustment, apply adhesive #501 on #391.

Note: 1) Place the camera back on the work surface with body top toward the collimator's post. If camera positioning is wrong, images in the collimator will be varied.
2) Image view should not vary in several shutter releasing, nor before and after shutter cocking.

Mirror 45° Adjusting Table:

	Upper	Lower	Left	Right
—— Image A ▬ Image B	⇓ down	⇑ up	⟹ right	⟸ left
How to align Image B on Image A	Rotate #391 clockwisely, and mirror moves in B direction	Rotate #391 counterclockwise, and mirror moves in A direction	Add #842F washer to #842 at two positions on FRE side, but one only at each place	Move B35 in the direction of arrow

Image A——: Image on J18037, Image B ▬ : Image on J18070

To adjust infinity(∞) focus

Tools: Lens tool 50mm F2(J18010), Collimator f=600mm(J19001)
Standard: Within 30"

Coarse-adjust the focus by evenly raising or lowering the washers (#842A - U) located at four places under Mirror box. Then, fine-adjust the focus with Mirror 45 adjusting pin(eccentric) #391. After adjustment, be sure to secure #391 with adhesive #501.

To adjust picture angle

Tools: Appropriate standard lens 50mm F1.4 as a tool. Test chart(J18006). Stage, Focusing screen tool (J18033)
Standard: Paralax . . . Within 0.5mm in the aperture plane, vertically and horizontally.
Finder view . . . Inclination of Finder image against aperture plane to be within 1°30'.

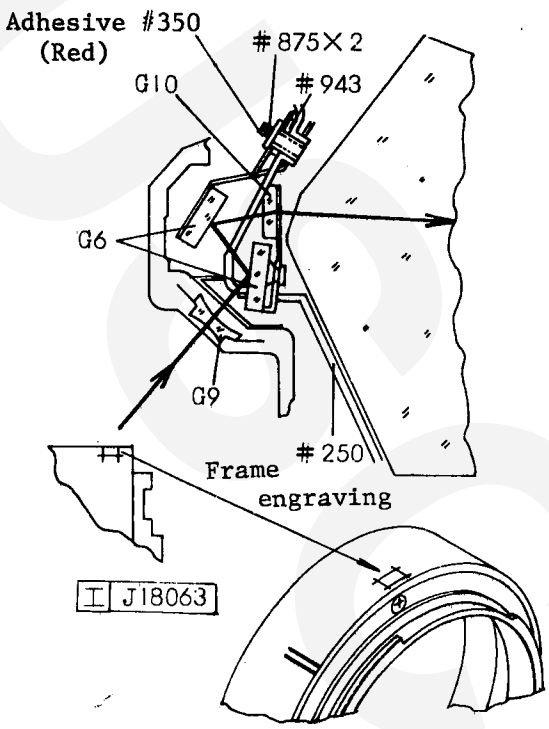

35. F-number window positioning

Attaching F-number window check gauge J18063 onto camera body, check and adjust the Position of F-number window.

Standard

Sideway position: Within 5mm dia of split-image spot

Height above screen: H = 0.3 - 1.5h

View of frame on: Within F-number window J18063

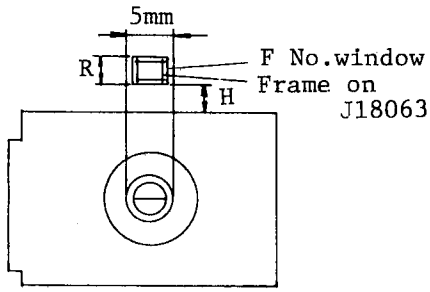

fig.54 F No. window positioning

How to adjust

1) by adjusting prism box (#250) to shift the window in the direction of arrow

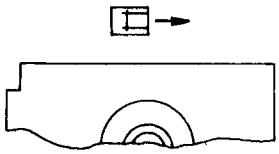

move #250 to the right

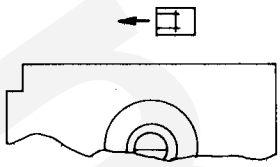

move #250 to the left

2) by adjusting screw(#875) to shift the window and the frame in the direction of arrow

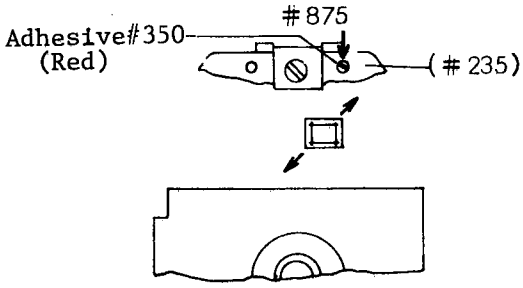

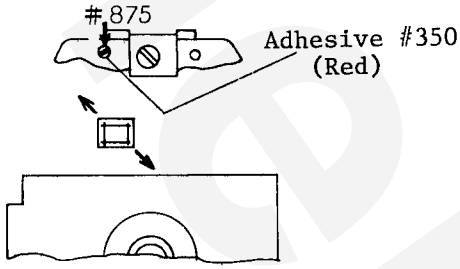

3) by changing washer (#943A - D) to shift the frame on J18063

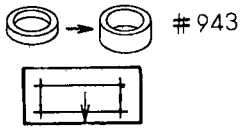

Use thicker washer to move the frame upward

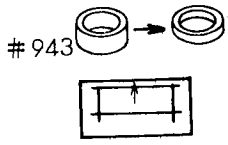

Washer

943A t=0.2
943B t=0.4
943C t=0.6
943D t=0.8

Use thinner washer to move the frame downward

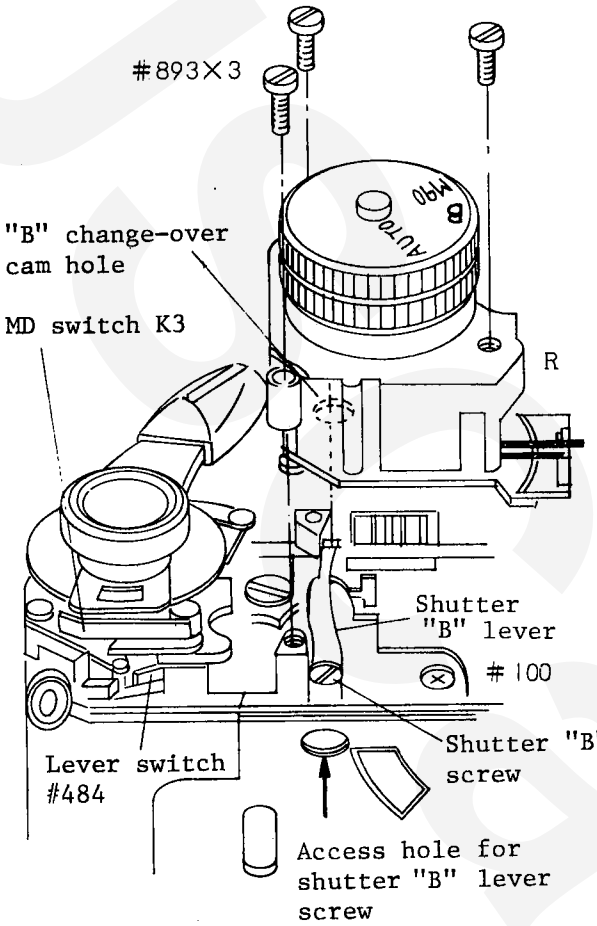

36. Shutter Speed Control(R) Installation

Body

Shutter Speed Control(R)

Set the shutter dial to "B", install Assy No.R in place so that shutter "B" Lever enters into the "B" change-over cam hole, and secure R with three screws (#893) aligning shutter speed film with screen frame. Fig.55) (See fig. 55)
Be careful not to scratch film nor to bend the needle.

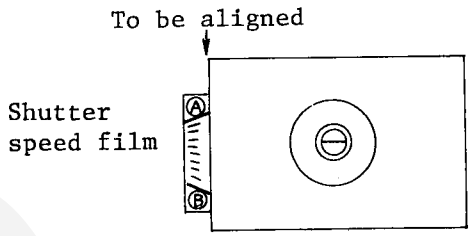

fig.55 Shutter speed film positioning

37. Mechanical Shutter Speed (B, M90) Adjustment

Adjust shutter "B" lever position through an access hole. Then, rotate shutter dial (Auto - M90 - B, B - M90 - Auto) to confirm proper change-over between M90 and B settings.

Lever switch · MD switch

For details of check and adjustment, refer to Item 39 in page 35

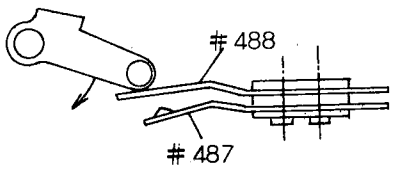

Lever switch

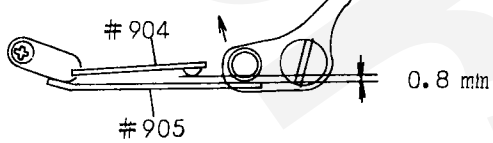

MD switch

38. Wiring diagram

35FB - R.3012.A

Use Soldering iron with earth.
Solder in cloth-gloves.
Apply insulation coating at the area shaded in the diagram

Soldering Material:
Solder CCS
Flux L-35

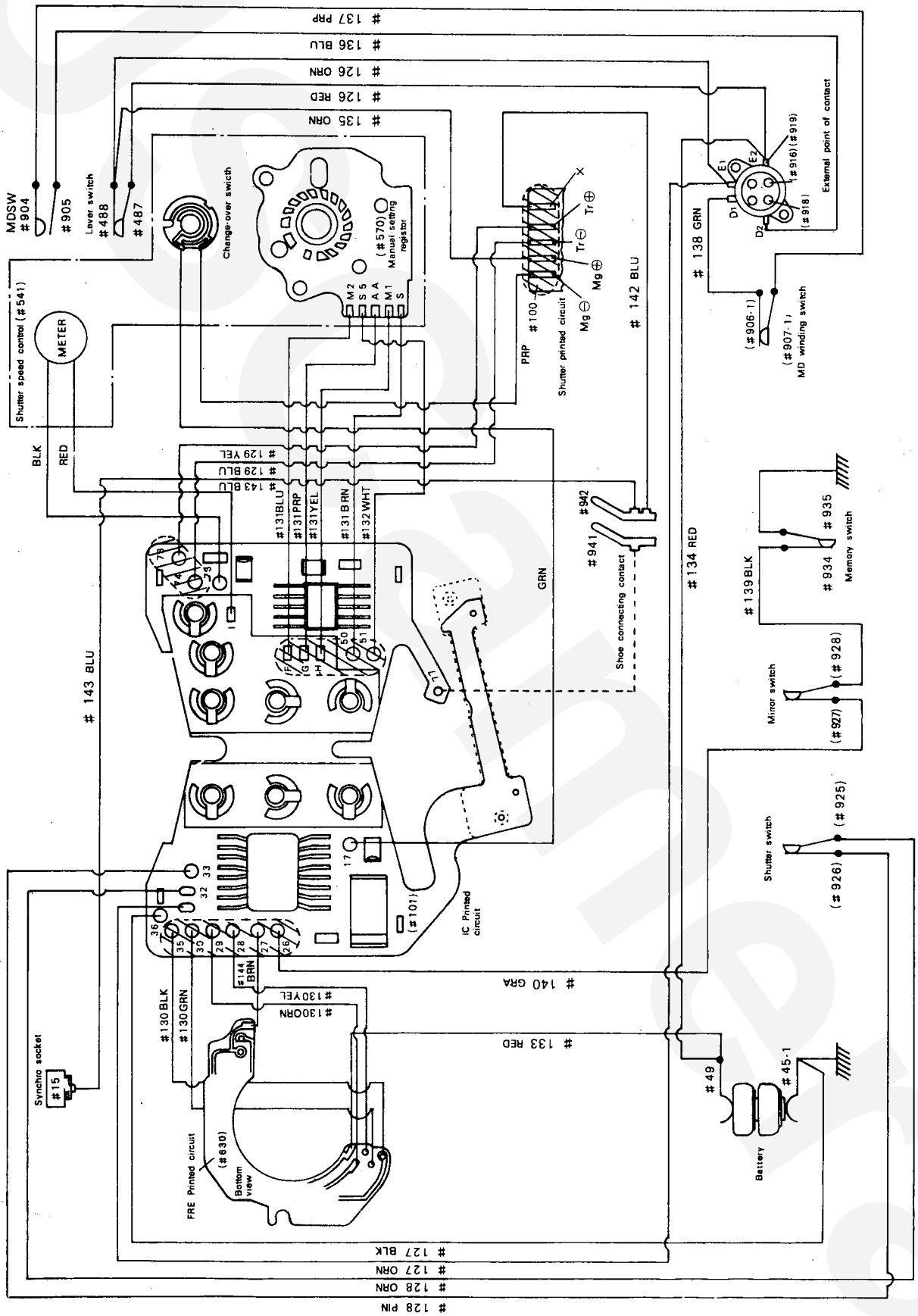

Replacement

N Refer to Page 34.

N When the silicone around terminals is removed for measurement, apply Toray silicone R4-3117 onto the terminal.

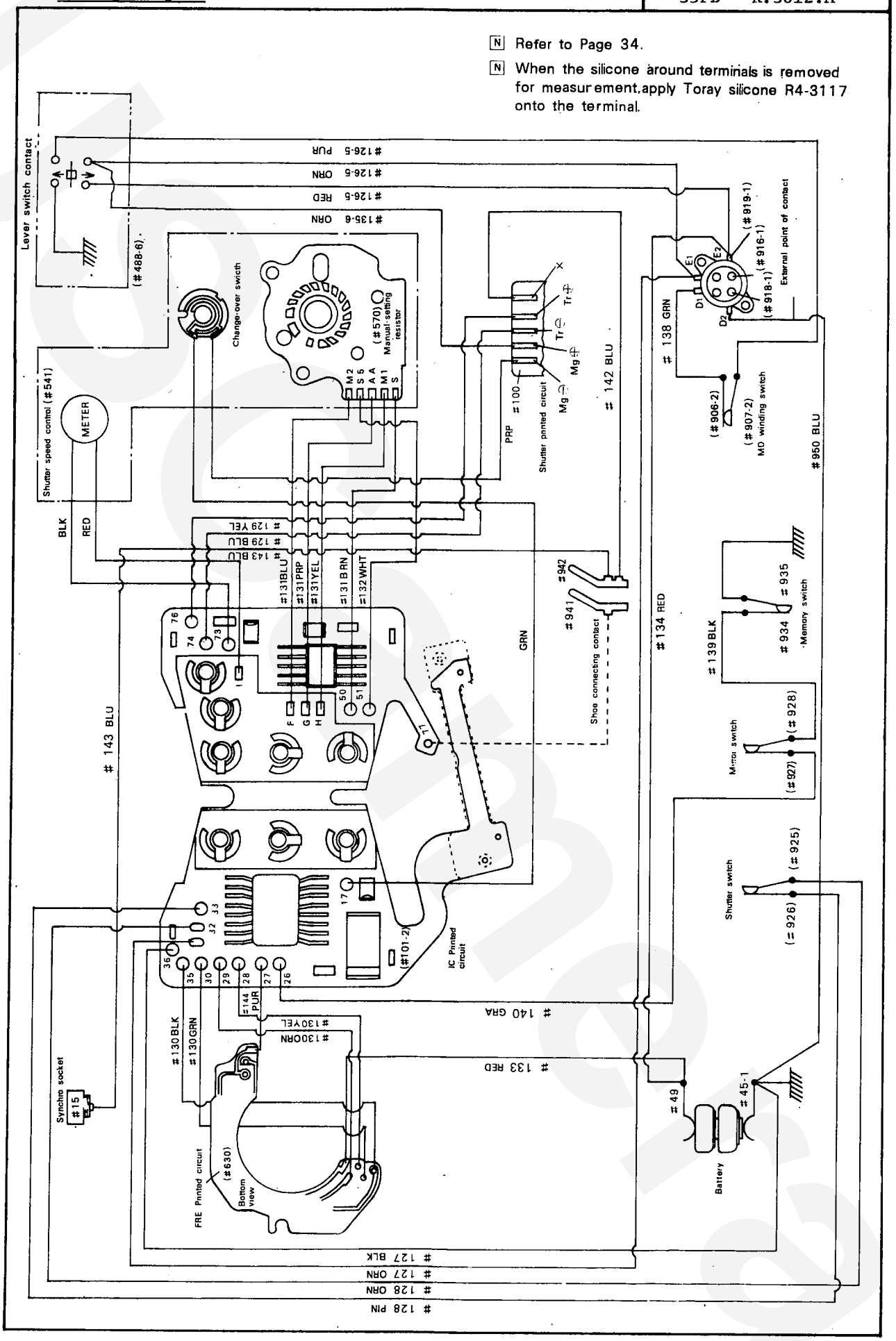

39. Lever Switch · MD switch check/ Adjustment Lever Switch(K4)

ON-OFF position standard:
ON: Within red index dot
OFF: Within the area as large as the red dot (shown in broken-line circle)

Bend switch contacts A, B(#487, #488) for proper ON-OFF timing (See page 33)

Inspect ON-OFF timing by the needle operation.
Meter should be switched ON when red dot is uncovered.

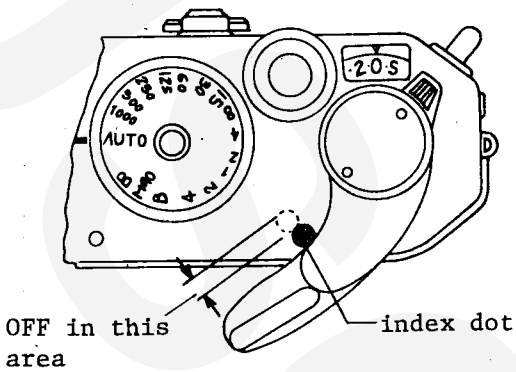

fig.56 Lever switch ON-OFF timing

MD switch(K3)

Setting general tester at resistance range, connect the terminals to D1 and D2. (See Figure 57)

Check the proper switch ON or OFF at the various settings shown in the table below from conduction into the tester.

Perform ON-OFF adjustment by bending MD switch contacts A, B(#904, #905). Contacts' interval between the two to be approx. 0.8mm when switched OFF. (See Lever switch · MD switch section on Page 33)

Note: MD switch(K3) should switch ON after lever switch(K4) switched OFF.
Before MD switch ON. there should be a timing where K3 and K4 are OFF.

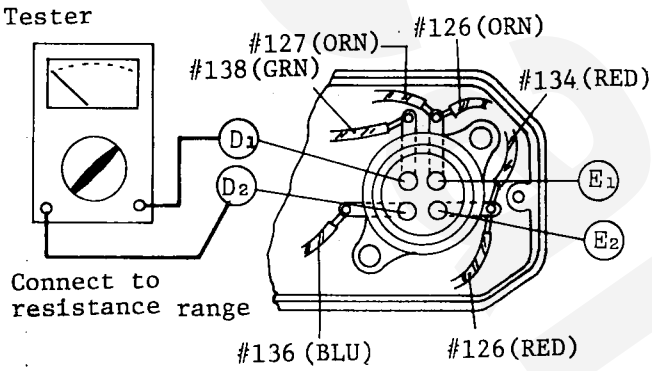

fig.57 MD switch conduction check

MD switch · Lever switch ON-OFF position

MD winding switch		MD switch		Tester
winding cycle	ON-OFF	Lever position	ON-OFF	Conduction
before winding	ON	Flush	ON	Conducted
		Stand-off	OFF	No conduction
Now winding	ON	Flush	ON	Conducted
		Stand-off	OFF	No conduction
Winding finished	OFF	Flush	ON	No conduction
		Stand-off	OFF	No conduction

Note: When MD winding switch and MD switch are ON, tester will be conducted.
For details of MD winding switch adjustment, refer to Page

40. Shutter/Meter Accuracy Adjustment

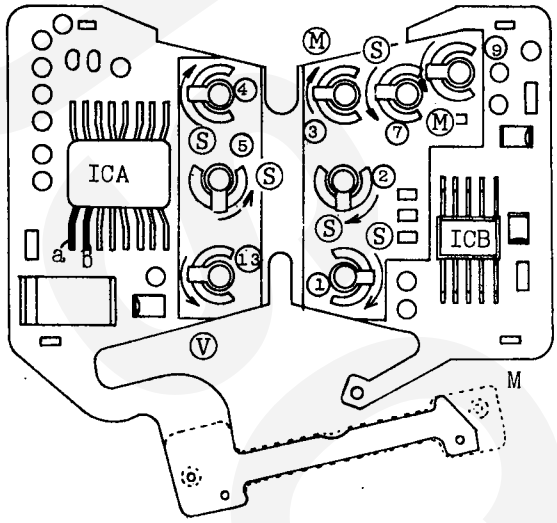

Fig.58 LC printed circuit

Marks:

Encircled No.: shows the number of variable resistor

Encircled alphabet

S : Variable resistor for shutter speed adjustment

M:: Variable resistor for meter needle swing adjustment

V : Variable registor for voltage adjustment

Arrows:
Show the directions to slow the shutter speed, to enlarge the needle swing or to lower the voltage.

e.g.: Ⓢ
Shutter speed can be lengthened by rotating the resistor.

Note: As a rule, when IC printed circuit is subassembled, its off-set adjustment and Auto- adjustment are performed. Thus, adjust in the sequences shown below (1) - (7) only when malfunctings observed.

Tools:

Digital Volt-meter: Impút impedance to be at least 1000MΩ
Resolution power to be at most 10mV

Shutter tester (J19022-1)

Tool lens for J19022-1, 50mm F1.4

Special Top cover for brightness adjustment (J15145)

Insulated screw driver (J15135)

1). OFF set Voltage Adjustment

Potential at ICA terminals a, b to be equal

Potential Difference standard: $|a-b| < 0.5mV$

Measurement: Setting at EV14, measure the voltage between Body(-) and terminal a, and the voltage between Body and terminal b with Digital volt meter(J9003-1). (See fig. 58)
Note: Before measurement, remove anti-humidity silicone coating on terminals a, b with xylol.

Adjustment: Made by rotating variable resistor ⑬.
Voltage change by RV ⑬ is larger at terminal a than terminal b, therefore, adjust the voltage at terminal a to be equal with the voltage at terminal b.

2). Automatic Shutter Speed Control Adjustment

When set at ASA100 and F16, shutter speed at EV9 should be 32 times as slow as that at EV14

Standard: 31.5 - 32.4 times

Adjustment: Made by rotating RV⑦. Shutter speed change by RV⑦ is larger at EV9 than at EV14, therefore, if shutter speed at EV9 is 32-times or more slower than that at EV14, rotate RV⑦ clockwisely.

3) FRE γ Adjustment

Shutter speeds between the two settings' combination (a) (b) should be equal.

a) ASA12, compensation +1, F5.6, EV14

b) ASA3200, Compensation -1, F5.6, EV4

Standard: Shutter speed difference 0.96 - 1.039 times each other

Adjustment: Made by rotating RV⑤. Shutter speed change is larger at settings (1) than settings (2), therefore rotate RV⑤ clockwisely if shutter speed at settings(1) is slower than that at (2).

4) Automatic Shutter Speed Control Level Adjustment

Made by rotating RV④. At ASA100, F5.6 and EV9, shutter speed should be 1/15 sec.

Standard shutter speed: 60.2 - 64.9ms (1/15)

5) Manual Shutter Speed Control γ Adjustment

Shutter speed at 1/2sec.(Manual) should be 32 times as slow as that at 1/60sec.(Manual).

Standard: 31.5 - 32.4 times

Adjustment: Made by rotating RV②. Shutter speed change by RV② is larger at slower settings. Therefore, if shutter speed at 1/2sec. is 32-times or less slower than that at 1/60sec, rotate RV② clockwisely.

6) Manual Shutter Speed Control Level Adjustment

Inspect shutter speeds at the settings of 1/125sec., 1/60sec., 1/2sec., 8sec. to be within standard. If out of standard, adjust by rotating RV①

Standard: 1/125sec. . . . 8.67 - 9.61ms 1/2sec. . . . 467 -535ms

1/50sec. . . .14.6 - 16.7ms 8sec. . . . 7000 - 9000ms

7) Meter Level/γ Adjustment

a)Meter level Adjustment

At ASA200, F5.6 and EV14, the meter needle should point to the 1sec. setting, or at ASA200, F5.6 and EV9. the needle should point to the 1/30sec. setting. If not, adjust by rotating RV③

b)Meter γ Adjustment

At ASA200, F5.6 and EV14, the meter needle should point to the 1/1000sec. setting. If not, adjust by rotating RV⑨.

Note: Adjustment by RV③ or RV⑨ affects the meter level or meter γ each other. Therefore, one is adjusted, be sure to inspect the other.

Meter needle swing by rotation of RV⑨ is larger at EV14 than at EV4. Therefore, adjust RV⑨ so that the needle at EV14 will point as the needle at EV4 points, showing the similar deviation if any.

8) Shutter Speed Check

a)Automatic shutter speed setting

Sequence Check	F No.			Standard		
				Lower limit	Standard	Upper limit
1	5.6	100	9	44.2	62.5	88.4
2			14	1.38	1.95	2.76
3	16	25		44.2	62.5	88.4
4			9	1414	2000	2828
5	2	400		1.38	1.95	2.76
6			4	44.2	62.5	88.4
7	5.4	100		1414	2000	2828

b)Manual Shutter Speed Setting

Speed setting	Standard		
	Lower limit	Standard	Upper limit
1000	0.68	0.98	1.41
125	7.81	7.81	11.2
15	49.0	62.5	79.7
1	785	1000	1275
8	6277	8000	10190

9) Speedlight-coupling mechanism check

Tool: Speedlight-substitute tool(J15147)

a) Auto shutter speed setting:
Mounting J15147 and setting at ASA 100, F5.6 and EV9, shutter speed should be;

1/90 sec.

b) Manual shutter speed setting:
When set at 1/250 sec. or higher setting with J15147 mounted, the ready light should continuously turn ON and OFF.

Meter Accuracy Check

ASA	F No.	EV	Needle points
100	8	4	4
100	4	14	1000

10) Memory Check

a) Set at ASA 100, F5.6 and EV9, and measure the shutter speed at Auto.
b) At the above settings, make the memory-lock operation. While changing exposure value (EV) from EV9 to EV14, measure the Auto shutter speed and compare the values with the values obtained without memory-lock operation. Extreme difference not permitted between the two.

41 FRE γ Adjustment by use of Reference Table

1) Adjust RV 5 to get shutter speed of 62.5±1.1ms at the settings of ASA12, exposure compensation setting +2, F5.6 and EV14.
2) Set the camera at ASA 3200, compensation 0, F5.6 and EV4, and read the shutter speed from the tester. Then, identify the corresponding speed in the FRE γ Adjustment Table, column T1.(Speed T1)
3) Keeping the settings of step (2) unchanged, adjust RV5 so as to change the speed in T1 to the speed in T2 column. (Speed T2)
4) Set the camera at the settings of step (1) and read the speed. Then, compare the value with the value in T2. The balance between the two should be within the value shown in the value shown in the table, column Balance. If out of the balance value, repeat the adjusting steps from (1).
e.g.: If Speed T1 obtained at step (2) is 45, the corresponding T2 speed FRE γ Adjustment Table is 27.67(Follow down). Therefore, speed at Step (4) should be 27.67±1.1because of the balance 1.1.

T1	29	31	33	35	37	39	41	43	45	47
T2	9.27	10.95	12.79	14.83	16.99	19.37	21.94	24.46	27.67	30.81
Balance	0.36	0.43	0.5	0.58	0.66	0.76	0.86	0.96	1.1	1.2
T1	49	51	53	55	57	50		65	67	69
T2	34.17	37.74	41.53	45.57	49.76	54.22	62.5	69.1	74.38	80.02
Balance	1.33	1.47	1.62	1.78	1.94	2.1		2.7	2.9	3.12
T1	71	73	75	77	79	81	83	85	87	89
T2	85.91	92.05	98.36	105.1	112.0	119.2	126.7	134.4	142.4	150.7
Balance	3.35	3.59	3.84	4.1	4.37	4.65	4.94	5.24	5.55	5.88
T1	91	93	95	97	99	101	103	105	107	109
T2	159.2	168.1	177.3	186.6	196.3	206.3	216.7	227.3	238.2	249.4
Balance	6.2	6.55	6.9	7.28	7.7	8.05	8.45	8.86	9.3	9.73
T1	111	113	115	117	119	121	123	125	127	129
T2	260.9	272.8	284.9	297.4	310.2	323.4	336.8	350.5	364.7	379.2
Balance	10.2	10.6	11.1	11.6	12.1	12.6	13.13	13.67	14.22	14.79

42 Manual Speed γ Adjustment

1) Adjust RV 2 so as to get 15.6±1ms at 1/60sec. manual setting
2) Set at 1/2sec. setting and read the shutter speed from the tester. Then, identify the corresponding speed in the Table below, column T1. (Speed T1)
3) Keep setting at 1/2sec., and adjust RV 2 so as to change the speed in T1 to that in T2 column. (Speed T2)
4) Setting at 1/60 sec. manual speed, read the speed. The speed should be within the value shown in the Table, Column T2/32(T2 speed ÷ 32).
If out of the value of T2/32 column, repeat the steps from (1).
e.g. If Speed T1 obtained at step (2) is 420, the corresponding T2 speed is 580. Therefore, the speed at step (4) should be 18.1±0.7ms.

Manual speed γ Adjustment Table

T1	350	360	370	380	390	400	410	420	430	440
T2	670	655	640	630	615	600	590	580	570	560
T2/32	20.9 ±0.8	20.5 ±0.8	20 ±0.8	19.68 ±0.8	19.22 ±0.8	18.75 ±0.7	18.43 ±0.7	18.1 ±0.7	17.8 ±0.7	17.5 ±0.7
T1	450	460	470	480	490		510	520	530	540
T2	550	540	530	520	510	500	495	490	483	475
T2/32	17.18 ±0.7	16.88 ±0.7	16.56 ±0.6	16.24 ±0.6	15.94 ±0.6		15.47 ±0.6	15.31 ±0.6	15.09 ±0.6	14.8 ±0.6
T1	550	560	570	580	590	600	610	620	630	640
T2	470	460	455	450	445	440	430	425	420	415
T2/32	14.7 ±0.6	14.38 ±0.6	14.22 ±0.5	14.06 ±0.5	13.9 ±0.5	13.75 ±0.5	13.43 ±0.5	13.28 ±0.5	13.12 ±0.5	12.97 ±0.5
T1	650	660	670	680	690	700	710	720	730	740
T2	410	405	400	395	390	388	385	380	375	372
T2/32	12.8 ±0.5	12.66 ±0.5	12.5 ±0.5	12.34 ±0.5	12.19 ±0.5	12.13 ±0.5	12.03 ±0.5	11.87 ±0.5	11.72 ±0.5	11.62 ±0.5
T1	750	760	770	780	790	800				
T2	368	365	360	355	350	347				
T2/32	11.5 ±0.5	11.41 ±0.5	11.25 ±0.5	111.1 ±0.5	110.9 ±0.5	10.8 ±0.5				

43. Shutter release · Hot-shoe Contact Inspection

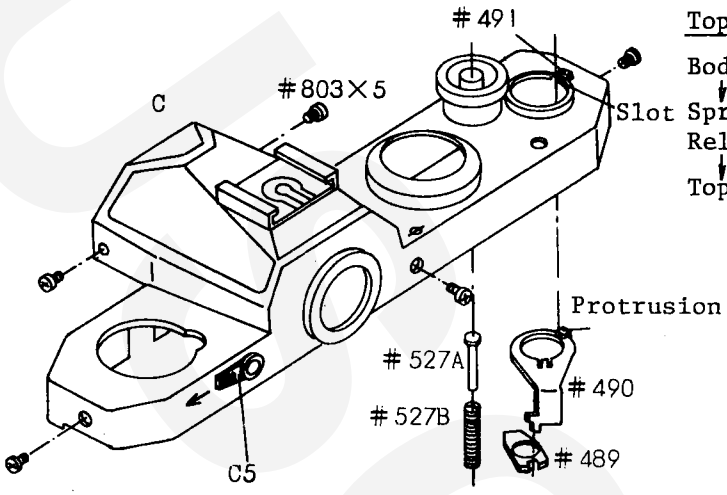

fig.59 Top cover Installation

Top Cover (Assy C) Installation

Body
↓
Spring(#527 B-1)
Release middle shaft(#527A)
↓
Top cover(C), Screw(#803x5)

Charge cam claw release lever (#489) should couple with Multi-exposure lever(#490).

Protrusion on #490 should engage into the cut of multi-exposure knob(#491)

Install checker lever(C5) positioning the lever as illustrated in Figure 59

Be careful not to damage the cover of lead wires.

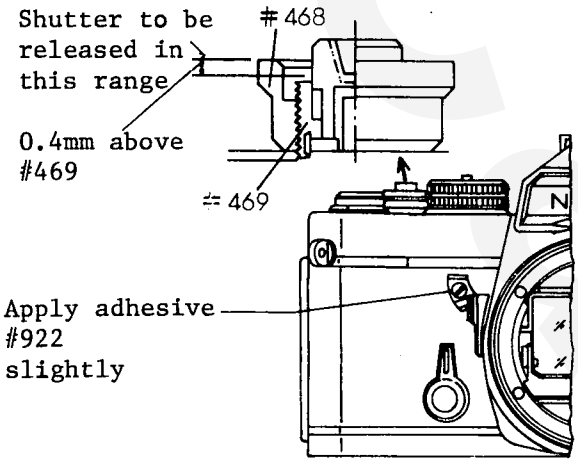

fig.60 Release button stroke

Shutter Release Timing

Shutter release button stroke: 2.7±0.3mm

Shutter should be released when release button depressed within the depth below #468 down to 0.4mm above #469. The button's stroke is 1.7mm.

Tool: Micrometer J18002

Release stroke adjustment is possible by eccentric pin(#519A)

Hot-shoe contact inspection

Check with tool J15147 ready light(#94), Auto-set shutter speed, X contact conduction.

Ready light ON/OFF

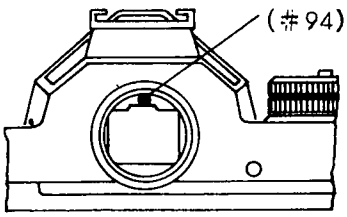

fig.61 Ready light

Shutter Speed dial	Ready light
Auto	ON
1/1000 - 1/250sec.	OFF
1/125 - B	ON

When ready light glows, auto-shutter speed should be automatically controlled to 1/90sec, regardless of the shutter speed indication inside the viewfinder.
X contact conduction is observed by the illumination of LED on J15147
Be careful not to release shutter with high-voltage insulation tester connected.

Section V. Troubleshooting Table

Content

Trouble	Cause		Solution	Code No.
Film-advance lever fails to return	Spool shaft spring (#529)	Disengagement	Re-install #529	21-01-1-1
		Breakage	Replace spool shaft (A9)	21-01-1-2
	Interference between pendulum #462 and ratchet cam (A10)		Adjust the positions of #538, #871 or both	21-01-2-1
Idle film-advance operation	Improper movement of charge cam claw (#414)		Replace set cam (A10)	21-02-1-1
	Inoperative blank exposure preventer lever (#26-1)		Adjust #26-1	21-02-2-1
	Claw spring #412	Disengagement	Re-install #412	21-02-3-1
		Breakage	Replace #412	21-02-3-2
	Sprocket screw (#435) comes off		Supplement ⊖ #435	21-02-4-1
	Spring #406	Disengagement	Re-install #406	21-02-5-1
		Breakage	Replace #406	21-02-5-2
	Broken Film advance shaft (#408)		Replace #408	21-02-6-1
Inoperative multiple exposures	Inoperative charge cam claw release lever #489		Engage Multi-exposure lever #490 with #489	21-03-1-1
	Foreign material enters into camera body.		Remove foreign material	21-04-1-1
	Defective shutter #100		Replace #100	21-04-2-1
	Stick of Blank exposure preventer lever #26-1		Adjust Motor switch coupling lever #25-1	21-04-3-1
	Stick of Pendulum #462 in set cam A10		Adjust Rendulm eccentric axle #538 and #871	21-04-4-1
Inoperative film-advance lever	Lock lever #464 fails to return	Disengagement of Lock lever spring #465	Re-install #465	21-04-5-1
		Broken #465	Replace #465	21-04-5-2
		#464 rubs with #1 and #539	Adjust and lubricate L 2113	21-04-5-3
	Catch of Sprocket stopper A12	A12 rubs against associated parts	Adjust #447 and #888 then lublicate L 2113	21-04-6-1
		Disengagement of spring #450	Re-install #450	21-04-6-2
		Broken #450	Replace #450	21-04-6-3
	Shutter release shaft #527 fails to return due to defective Release shaft spring #536		Re-install Release shaft E-ring #841	21-04-7-1
	MD Shaft #911 fails to return		Clean and lubricate L 2113	21-04-8-1
			Replace #911	21-04-8-2
Inoperative Anti-reversing	Screw #871 loosened		Adjust position of Pendulum eccentric axle #538	21-05-1-1
	Pendulum spring #538A	Disengagement	Re-install #538A	21-05-2-1
		Breakage	Replace #538A	21-05-2-2

Trouble	Cause		Solution	Code No.
Inoperative sprocket Anti-reversing	Improper movement of Anti-reversing claw A #443 and B #444		Adjust #443 and #444	21-06-1-1
			Replace Lower base plate A11	21-06-1-2
	Weak Anti-reversing claw spring #445		Adjust #445	21-06-2-1
			Replace Lower base plate A11	21-06-2-2
Excessive play of sprocket or Uneven frame-to-frame space	Incorrect position of sprocket stopper cam #429	Incorrect positioning	Adjust position of #429	21-07-1-1
		Loose Gear set screw #824	Adjust position of #429	21-07-1-2
	Sprocket stopper #447 bent		Adjust #447	21-07-2-1
			Replace sprocket stopper A12	21-07-2-2
	Broken sprocket stopper spring #496		Replace #496	21-07-3-1
Overlapped exposures	Pendulum #462 is released from Ratchet cam #530 too early		Adjust position of Pendulum eccentric axle #538	21-08-1-1
	Excessive play of sprocket		Refer to code No. (21-07-1-1)-(21-07-3-1)	21-08-2-1
	Weak spool tension		Adjust tension (220 - 260g)	21-08-3-1
Failure to cock shutter	Defective shutter #100		Replace #100	21-09-1-1
	Loose caulking of shutter charge lever A4		Replace A4	21-09-2-1
Failure to charge mirror	Loose caulking of charge lever A6		Replace A6	21-10-1-1
	Poor engagement of Mirror-down latch lever #330 and Mirror-down lever B13.		Adjust #330	21-10-2-1
			Replace #330	21-10-2-2
			Replace B13	21-10-2-3
	Spring #289	Disengagement	Re-install #289	21-10-3-1
		Breakage	Replace #289	21-10-3-2
	Bent tip of Mirror charge lever B11		Replace B11	21-10-4-1
Excessive play of Film-advance lever	Loose Wind-up lever screw #403		Re-tighten #403	21-11-1-1
Abnormal sound during film-advance operation				21-12-1-1

2. Frame Counter Mechanism Trouble

Trouble	Cause		Solution	Code No.
Failure of fame counter advance	Improper position of Counter eccentric shaft #516-1		Adjust position of #516-1	22-01-1-1
	Spring #521	Disengagement	Re-install #521	22-01-2-1
		Breakage	Replace #521	22-01-2-2
	Improper movement of advance claw #510-1		Adjust advance claw lever axle #512	22-01-3-1
	Incorrect shape of teeth of ratchet #532-1		Replace #532-1	22-01-4-1
Inoperative counter resetting	Disengagement of spring #505		Re-install #505	22-02-1-1
	Disengagement of spring #521		Re-install #521	22-02-2-1
	Failure of ratchet claw return #506		Adjust claw nut #507	22-02-3-1
Disaligned Index	Loose lever axle nut #405		Adjust Frame-counter index #533 and #405	22-03-1-1

3. Shutter Release Mechanism Trouble

Unsmooth shutter button operation	Shutter release shaft #527 rubs against Body die-casting #1		Adjust and grease G7100	23-01-1-1
	Release lever guide pin #879 rubs against body die-casting #1		Chamfer guide groove of #1	23-01-2-1
	Loose release lever guide pin #879		Re-tighten #879	23-01-3-1
	Release button rubs against Release ring #469		Clean, adjust and grease G7100	23-01-4-1
	Mirror-up lever B12 rubs against Mirror-up stop lever #329		Grind engaging portion with oilstone and grease G7100	23-01-5-1
Incorrect shutter release timing	Incorrect position of Eccentric pin #519A		Adjust position of #519A	23-02-1-1
Failure of Shutter release button depression	Lock lever #464 fails to return		Adjust movement of #464	23-03-1-1
	Broken lock lever spring #465		Replace #465	23-03-2-1
	Switch lock lever P4 fails to disengage from shutter release shaft #527	Disengagement of spring #476	Re-install #476	23-03-3-1
		Broken #476	Replace #476	23-03-3-2
		P4 rubs against #473	Adjust MD switch stopper axle #473	23-03-3-3
Unable to release shutter with motor drive	Release connecting screw #913 comes off		Install #913 and apply adhesive #410 B/M	23-04-1-1
	Defective Motor Drive		Refer to MD-11 Repair Manual	

4. Shutter Mechanism Trouble

Trouble	Cause		Solution	Code No.
Incorrect shutter speed	Defective shutter #100		Replace #100	24-01-1-1
	Electrical circuitry trouble		Refer to electrical troubleshooting	
Shutter curtain jam during film advance	Defective shutter #100		Replace #100	24-02-1-1
Shutter rear curtain fails to return	Too tight Brake spring (#286-1)		Replace shutter brake B37	24-03-1-1
Inoperative 'B' setting	Incorrect position of shutter 'B' lever eccentric screw of #100		Adjust position of eccentric screw	24-04-1-1
	Improper movement of shutter 'B' lever	Lever bent	Adjust #100	24-04-2-1
			Replace #100	24-04-2-2
		Poor Eccentric axle caulking	Replace #100	24-04-2-3
	Defective shutter #100		Replace #100	24-04-3-1
Shutter curtain fails to open at M90	Defective shutter #100		Replace #100	24-05-1-1
Incorrect shutter speed at M90	Defective shutter #100		Replace #100	24-06-1-1
Shutter speed sometimes becomes 'B' at M90	Incorrect position of shutter 'B' lever eccentric screw of #100		Adjust #100	24-07-1-1

5. Self-timer Mechanism Trouble

Unable to cock self-timer	Defective self-timer		Replace shutter #100	25-01-1-1
Self-timer stops halfway	Self-gear assembly	Dust	Clean self-gear assembly	25-02-1-1
		Defective	Replace shutter #100	25-02-1-2
Unable to cancel setting	Incorrect position of self-timer shaft eccentric screw		Adjust position of Eccentric screw	25-03-1-1
	Defective self-timer		Replace shutter #100	25-03-2-1

6. Flash Synchronization Trouble

Trouble	Cause		Solution	Code No.
Poor synchronization	Incorrect X contact clearance of #100		Adjust contact clearance	26-01-1-1
			Replace #100	26-01-1-2
	Incorrect shutter speed at M90	Poor adjustment of Shutter 'B' lever eccentric screw	Adjust position of shutter 'B' lever eccentric screw	26-01-2-1
		Defective shutter #100	Replace #100	26-01-2-2
Failure of flash output on hot-shoe contact	Defective sync socket #15		Replace #15	26-02-1-1
	X contact of #100	Incorrect clearance	Adjust clearance	26-02-2-1
			Replace #100	26-02-2-2
		Contamination or dust	Clean contact	26-02-2-3
	Lead wire A #142 Lead wire B #143	Disconnection	Replace #142 or #143	26-02-3-1
		Disengagement	Re-solder	26-02-3-2
	Incorrect clearance between upper shoe switch contact #69 and Lower shoe switch contact #70	Bend of #69 or #70	Adjust clearance between #69 and #70	26-02-4-1
		Loose nut #76	Re-tighten #76	26-02-4-2
Poor insulation	Defective sync. socket #15		Replace #15	26-03-1-1
	Lead wire A #142 Lead wire B #143	Broken vinyl cover	Replace #142 or #143	26-03-2-1
		Poor soldering	Re-solder	26-03-2-2
	Defective Hot-shoe mould (C1)		Replace C1	26-03-3-1
	Defective Ready-light printed circuit C6		Replace C6	26-03-4-1

7. Lens Mount Mechanism Trouble

Unable to release lens	Inoperative lens release lever B5		Clean and grease G7100	27-01-1-1
Excessively tight or loose lens releasing	Bayonet spring #208 x 3	Excessive spring pressure	Adjust bending of #208	27-02-1-1
		Weak spring pressure	" "	27-02-2-1
	Defective bayonet #202		Replace #202	27-02-2-1

8. Meter Coupling Mechanism Trouble

35FB - R.3012.A

Trouble	Cause		Solution	Code No.
Unsmooth Aperture Coupling ring operation	Incorrect position of Bayonet mount #201		Re-locate #201 to provide smooth operation of B4	28-01-1-1
	Improper combination of Bayonet mount #201 and Aperture coupling ring B4		Change parts combination for proper match	28-01-2-1
	Improper engagement of Brush coupling gear B25		Adjust position of B25	28-01-3-1
			Replace B25	28-01-3-2
	Tread #269	Disengaged from Roller lever B7	Re-install #269. Check position of Thread retaining plate #264	28-01-4-1
		Poor knot	Re-knot #269	28-01-4-2
			Replace B25	28-01-4-3
	Incorrect shape of Brush gear teeth #686		Replace #686	28-01-5-1
	Poor engagement of Brush gear #686 with Brush coupling gear B25		Adjust play between #686 and B25	28-01-6-1
	Brush B #698 disengages from FRE printed circuit J		Adjust position of #698	28-01-7-1
	Defective spring #694 of B25	Insufficient spring pressure	Replace B25	28-01-8-1
		Broken #694	Replace B25	28-01-8-2
	Uneven rotation of FRE		Adjust FRE rotation	28-01-9-1
			Replace FRE ring F2	28-01-9-2
Coupling ring fails to couple with FRE	Thread (269)	Sanpped	Replace Brush coupling gear B25	28-02-1-1
		Disengagement	Re-knot #269	28-02-1-2
			Replace B25	28-02-1-3
Excessive play of Aperture coupling piece	Coupling Piece Spring	Bend	Adjust bending of #210	28-03-1-1
		Incorrect position	Adjust position of #210	28-03-1-2
Unable to release Aperture coupling piece	Calking of Aperture coupling piece #209 comes off		Replace Aperture coupling ring B4	28-04-1-1
Incorrect Maximum Aperture (F1.4) compensation	Incorrect setting position of Brush coupling gear B25		Adjust position of coupling gear #224	28-05-1-1
	Improper movement of Roller lever B7		Adjust movement of B7	28-05-2-1
			Replace B7	28-05-2-2
	Roller lever spring #267	Disengagement	Re-install #267	28-05-3-1
		Breakage	Replace #267	28-05-3-2

9. Diaphragm Actuating Lever Trouble

Trouble	Cause		Solution	Code No.
Inoperative Diaphragm actuating lever	Diaphragm lever spring #340	Disengagement	Re-install #340	29-01-1-1
		Breakage	Replace #340	29-01-1-2
Failure to open to maximum operture	Incorrect height of Diaphragm actuating lever B10, with shutter cocked		Adjust height to be 3.1 $^{+1}_{-0}$ by Eccentric pin #356	29-02-1-1
Shutter is released while stroking film-advance lever with lens mounted	Insufficient difference of height of B10 between before shutter cocking and after shutter releasing.		After releasing shutter, adjust Down lever eccentric axle #367 Difference to be 0.15mm or more	29-03-1-1
Incorrect height of Diaphragm acuating lever, with shutter cocked	Shock absorb rubber #363 comes off		Affix #363 with adhesive #501	29-04-1-1

10. Reflex-Mirror Mechanism Trouble

Abnormal mirror sound	Inoperative Air damper B20		Replace B20	30-01-1-1
	Cushion rubber #372 comes off		Affix #372 with adhesive #501	30-01-2-1
	Incorrect spring pressure of Brake spring #286-1		Replace B37	30-01-3-1
	Excessive play between Mirror holder B26 and Mirror G1	Defective Mirror holder A #345 or B #346	Replace B26	30-01-4-1
		G1 comes off	Affix G with adhesive #501	30-01-4-2
Incorrect position of Mirror	Incorrect angle of Mirror holder A #345 and B #346		Adjust #345 and #346	30-02-1-1
			Replace Mirror holder B26	30-02-1-2
Too early or late mirror-rising	Incorrect position of Eccentric pin #356		Adjust #356	30-03-1-1
Mirror stops midway during operation	Air damper B20 jams	Contamination	Clean B20	30-04-1-1
		Rust	Replace B20	30-04-1-2
Shift of Mirror position dependent on camera holding	Mirror spring (s) #379	Insufficient spring pressure	Replace #379	30-05-1-1
		Breakage	Replace #379	30-05-1-2

11. Viewfinder Mechanism Trouble

35FB - R.3012.A

Trouble	Cause		Solution	Code No.
Improper infinity focusing	Improper movement of 45° stopper B16		Adjust B16	31-01-1-1
			Replace B16	31-01-1-2
	Excessive play between Mirror holder B26 and Mirror G1	Defective Mirror holder A #345 and B #346	Adjust #345 and #346	31-01-2-1
			Replace B26	31-01-2-2
		G1 comes off	Affix G1 with adhesive #501	31-01-2-3
	Deformation of Mirror holder B26	Deformed Mirror holder #301	Replace B26	31-01-3-2
		Loose calking of pin A #307	Replace B26	31-01-3-2
		Loose calking of pin B #308	Replace B26	31-01-3-3
Incorrect picture format	Incorrect mirror angle		Adjust 45° stopper B16	31-02-1-1
	Incorrect position of Prism box B39		Adjust position of B39	31-02-2-1
Poor viewing	Fresnel screen G2	Distortion	Replace G2	31-03-1-1
		Poor installation	Adjust G2 installation	31-03-1-2
	Incorrect position of Prism box B39		Adjust height of B39	31-03-2-1
	Incorrect mirror angle		Adjust 45° stopper B16	31-03-3-1
Fresnel lens prone to come off	Insufficient spring pressure of screen lock spring #240		Adjust #240	31-04-1-1
Incorrect position of T-film	Incorrect position of shutter speed control R		Adjust position of R	31-05-1-1
Incorrect position of lens aperture indication window	Poor adjustment of Reflex Mirror G6		Adjust G6	31-06-1-1
	Poor adjustment of G10		Adjust G10	31-06-2-1
	Incorrect position of Prism box B39		Adjust position of B39	31-06-3-1
Incorrect position of green needle			Adjust R	31-07-1-2
			Replace R	31-07-1-2
Poor focusing	Improper infinite focusing		Refer to Code No. (31-01-1-1)-(31-01-3-3)	
	Incorrect flange back		Adjustment	31-08-1-1
Aluminum plating separation on penta prism			Replace G3	31-09-1-1
Dust or contamination in viewfinder			Clean	31-10-1-1
Scratch on fresnel screen			Replace G2	31-11-1-1

12. Exposure meter Mechanism Trouble

Trouble	Cause			Solution	Code No.
Meter needle fails to swing	MD external contact pin (E1) and (E2) fail to be ON	Poor contacts between Lever switch contact A #487 and B #488		Clean #487 and #488	32-01-1-1
				Adjust clearance between #487 and #488	32-01-1-2
		Poor contact of Battery chamber A5		Clean contact of A5	32-01-1-3
				Replace A5	32-01-1-4
		Lead wire #126	Disconnection	Replace #126	32-01-1-5
			Unsolderd	Re-solder	32-01-1-6
	Meter needle fails to operate when MD external contact pin (E1) and (E2) is ON	Defective electrical circuitry		Refer to Electrical Trouble shooting	
	Defective only when motor drive mounted	MD's switch fails to be ON		Refer to MD repair manual	
Meter switch fails to be OFF	MD external contact pin (E1) and (E2) fail to be OFF	Lever switch contact A #487 touches B #488		Adjust clearance between #487 and #488	32-02-1-1
		Lead wire #126	Short circuit	Replace #126	32-02-1-2
			Poor soldering	Re-solder	32-02-1-3
	Defective only when motor drive mounted	MD's switch fails to be OFF		Refer to MD Repair Manual	

13. Memory Lock Mechanism Trouble

Inoperative memory lock	Memory switch fails to be OFF	Adjust by bending Memory switch #934	33-01-1-1
	Defective electrical circuitry	Refer to Electrical Trouble shooting	

14. ASA Setting Mechanism Trouble

Trouble	Cause		Solution	Code No.
Unsmooth rotation of ASA film speed ring	Tight rotation of FRE(F2)		Adjust and clean FRE ring F2	34-01-1-1
			Replace FRE ring F2	34-01-1-2
Unable to change ASA setting	Protrusion of ASA click spring #670 does not disengage from ASA click plate #676		Adjust bending of #670	34-02-1-1
Unable to lock ASA setting	Protrusion of ASA click spring #670 does not fit into the cut-out of ASA click plate #676		Adjust bending of #670	34-03-1-1
	Loose ASA dial #672		Secure knob lock lever shaft #689 with screw ⊕ #802	34-03-2-1
Disaligned ASA index	ASA dial #672 comes off		Affix #672 with adhesive #501	34-04-1-1
Unsmooth rotation of Exposure correction ring	Exposure correction spring #692	Insufficient spring pressure	Adjust #692	34-05-1-1
		Contamination	Clean #692	34-05-1-2
	Unsmooth rotation of FRE ring F2		Adjust and clean F2	34-05-2-1
			Replace F2	34-05-2-2
Unable to compensate exposure	Broken Exposure correction click pin #695		Replace ASA dial F4	34-06-1-1

15. Rewinding Mechanism Trouble

Unsmooth rewinding	Creak of Rewind shaft #652 and Release shaft guide #665		Clean #652 and #665 and grease G7100	35-01-1-1
			Replace #652	35-01-1-2
			Replace #665	35-01-1-3
Inoperative camera back latch release	Spring #655	Disengagement	Re-install #652	35-02-1-1
		Breakage	Replace #665	35-02-1-2
Difficult to lift up rewind knob when opening camera back	Improper movement of Latch B #708		Clean contact of #708	35-03-1-1
Inoperative Film rewind button	AR lever #537	Improper movement	Adjust #537	35-04-1-1
		Disengagement of AR lever spring #537B	Re-install #537B	35-04-1-2
		Broken AR lever spring #537B	Replace #537B	35-04-1-3

16. Battery Consumption Trouble

Trouble	Cause	Solution	Code No.
Poor insulation between MD external contact pin (E1) and (E2)	Lever switch contact A #487 touches B #488	Adjust clearance between #487 and #488	36-01-1-1
	Vinyl cover of Lead wire #126(Orange) (Red) is broken and comes in contact with Body die-casting	Replace #126	36-01-2-1
	Poor soldering of Lead wire #126	Re-solder #126	36-01-3-1
	Defective electrical mechanism	Refer to electrical trouble shooting	

17. MD External Contact Pin Mechanism Trouble

Failure to operate with motor drive	Poor conduction between MD external contact pin (E1) and (E2)	Poor contact of MD terminal pin	Clean and adjust	37-01-1-1
		Poor contact between MD take-up switch A(#906-1) and B(#907-1)	Clean #906-1 and #907-1	37-01-2-1
			Adjust clearance between #906-1 and #907-1	37-01-2-2
			Replace Battery chamber A5	37-01-2-3
		Poor contact of MD switch K3	Clean #904 and #905	37-01-3-1
			Adjust clearance between #904 and #905	37-01-3-2
		Poor operation of switch lock lever P4	Adjust P4	37-01-4-1
			Replace P4	37-01-4-2
		Switch stopper spring #476 of P4 disengaged or broken	Re-install #476	37-01-4-3
			Replace #476	37-01-4-4
		Disconnection or poor soldering of Lead wire (#136, #137, #138)	Replace #136, #137, #138	37-01-5-1
			Re-solder #136, #137, #138	37-01-5-2
	MD external contact pin (E1) and (E2) fail to be OFF	Soldered portion of MD switch K3 contacts upper base plate K	Re-solder	37-02-1-1
		MD take-up switch A #906-1 and B #907-1 contact body die-costing	Adjust bending of #906-1 and #907-1	37-02-2-1
			Replace Battery chamber A5	37-02-2-2
		Short-circuit between Lead wire (#136,#137, #138) and Body die-casting due to breakage of vinyle cover	Replace #136, #137 #138	37-02-3-1
	Camera body only operative	Defective motor drive	Refer to MD repair manual	

18. Exterior Parts Trouble

35FB - R.3012.A

Trouble	Cause	Solution	Code No.
Camera back loosened	Defective Light-tight #58-1 " " #58A-1 " " #58B-1	Replace #58-1, #58A-1 and #58B-1	38-01-1-1
	Defective camera back E1	Replace E1	38-01-2-1
Loose shutter dial ring	Defective click of shutter speed control R	Replace R	38-02-1-1
Disengagement of eyelet	Eyelet set screw #848 falls off	Install #848	38-03-1-1
Scratch or crack		Replacement	38-04-1-1

1. Servicing procedures

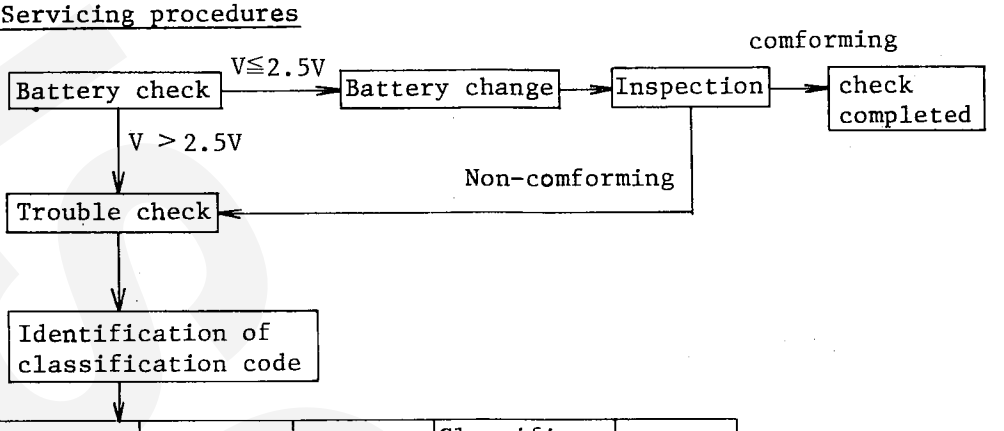

Auto	Manual	Meter	Classification code	page
normal	normal	normal	000	
normal	normal	ABNORMAL	001	
normal	ABNORMAL	normal	010	
normal	ABNORMAL	ABNORMAL	011	
ABNORMAL	nomal	normal	100	
ABNORMAL	normal	ABNORMAL	101	
ABNORMAL	ABNORMAL	normal	110	
ABNORMAL	ABNORMAL	ABNORMAL	111	

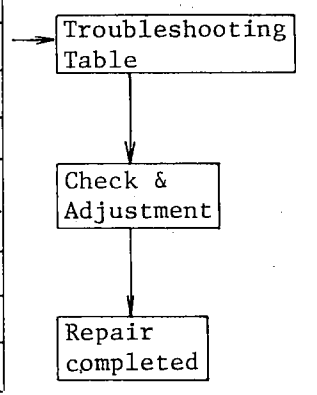

Note: Classification code is represented by three figures. The first figure from the left represents the normal or abnormal Condition of Auto setting. The middle figure is for the condition of manual setting, and the last figure for the condition of meter needle indication. If the operation is normal, "0" will be given in the corresponding place, and "1" if abnormal.

e.g.

Auto	Manual	Meter
Normal	Abnormal	Normal
0	1	0

→ thus classification code is 010

Battery check

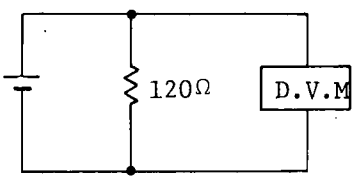

V<2.5V: conforming
V≦2.5V: Nonforming

D.V.M: Digital Volt meter

How to check the trouble

Use power source box (J19024) and Battery tool (J15148).
Unless otherwise specified, check at the settings of ASA100 and F5.6.

2. How to read troubleshooting table

Classification code ①			How to check	Cause	Code No.
Auto	Manual	Meter			
②	③	④	⑤	⑥	⑦

①: Classification code No.

②,③,④: Malfunctioning conditions given in these column. If normal, the colums left blank.

⑤: Malfunctioning conditions except at Auto, Manual and Meter. Left blank if additional phenomena not found.

⑥: Cause of the malfunctioning conditions

⑦: Code No. to refer to the cause

Marks and Terminology

#101 (31): Terminal No.(31) on IC printed circuit

#108 (1): Terminal No.(1) on Resistor block B(#108)

#630 (7): Terminal No.(7) on FRE printed circuit (#630)

#100 (Tr +): Terminal (Tr +) on shutter printed circuit (#100)

#570 [AA]: Terminal [AA] on manual printed circuit (#570)

Lever switch ON: By pulling out the film-advance lever to stand-off position.

Trigger switch ON: By turning the film-advance lever.

Shutter switch ON: Switches on while mirror is rising. To facilitate the check by keeping the switch ON, set the self-timer and depress the shutter release button, holding the mirror with finger to allow the mirror to gently rise.

Icc: Current at Power source

Standard Icc

With lever switch ON: Approx. 1 - 2.5mA

With Trigger switch ON: Approx. 1 - 2.5mA

With Shutter switch ON: Approx. 12 - 20mA

Note: Extremely large Icc may damage the IC. Therefore, switch off the power source immediately after completion of check.

3. Switches

Description	Abbreviation	Position
Lever switch	L. sw	Lower base plate
Mirror switch	M. Sw	Front plate
Shutter switch	S. Sw	Front plate
Trigger switch	Tr. Sw	Shutter
Second curtain switch		Battery chamber
Synch switch		Shutter
MD switch	MD Sw	Upper base plate
Memory lock switch	ML Sw	Front plate
Mech. speed changeover switch		Shutter speed control
Checker switch		FRE Printed circuit

Switch Operation

Camera operation	Film-advance lever pulled out	Film-advance starts	Film-advance finished	Shutter button pushed	Mirror-up starts	Shutter-release starts	Mirror-up finished	1st curtain starts	1st curtain travel finished	2nd curtain starts	2nd curtain travel finished	Mirror-down starts	Mirror-down finished	Film-advance lever pressed back
L. Sw	ON													OFF
M. Sw					OFF									
S. Sw								ON immediately after M.Sw OFF						
Tr. Sw		ON						OFF immediately before 1st curtain travel						
2nd curtain Sw			OFF								ON			
Synch. Sw									ON		OFF			
MD. Sw	OFF													ON
ML Sw.	OFF when memory lock lever pressed toward the lens													
Mech. speed change-over switch	OFF at "B" and M90													
Checker switch	ON when checker lever lowered													

4. Circutry Diagram

35FB - R.3012.A

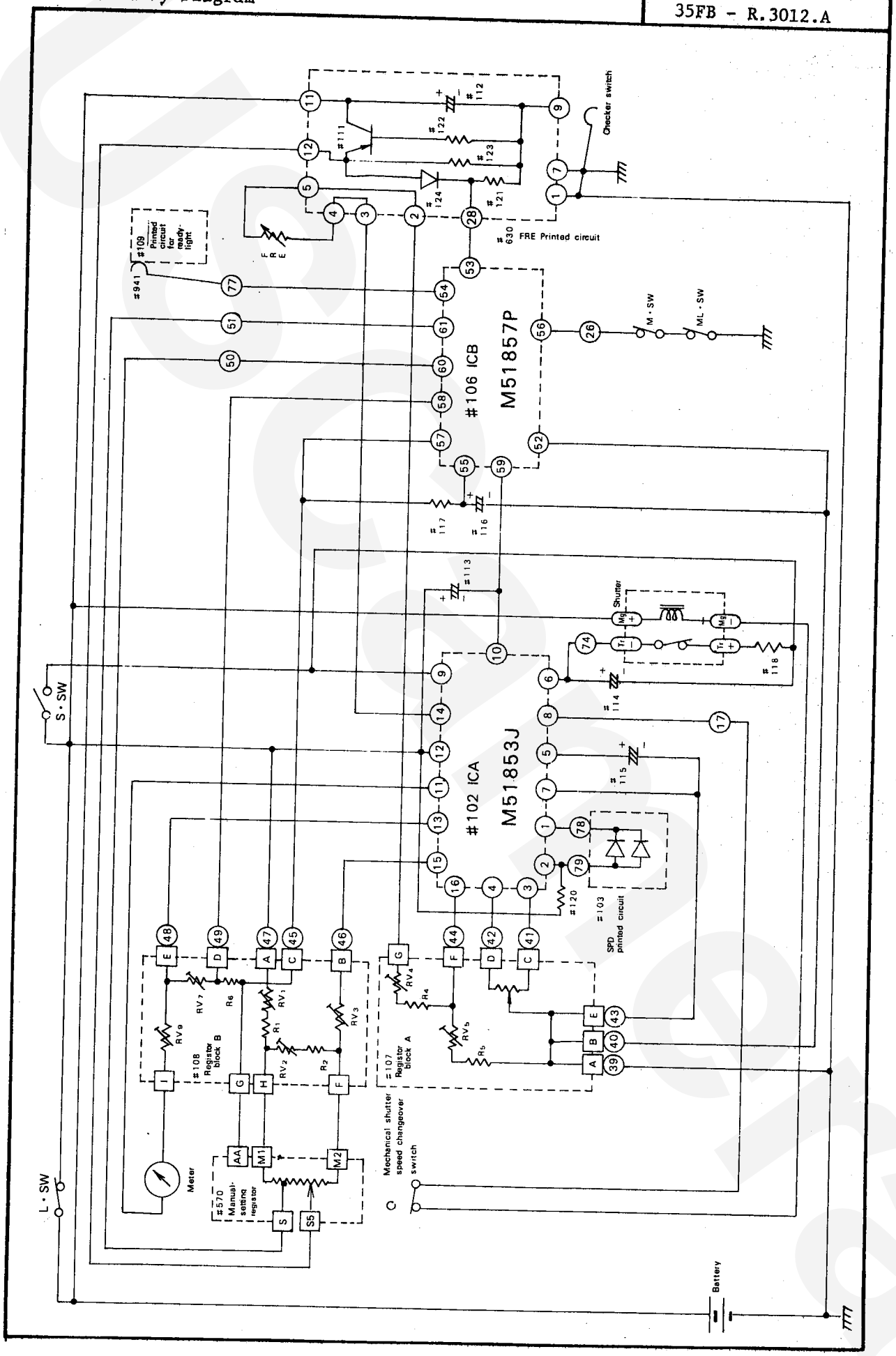

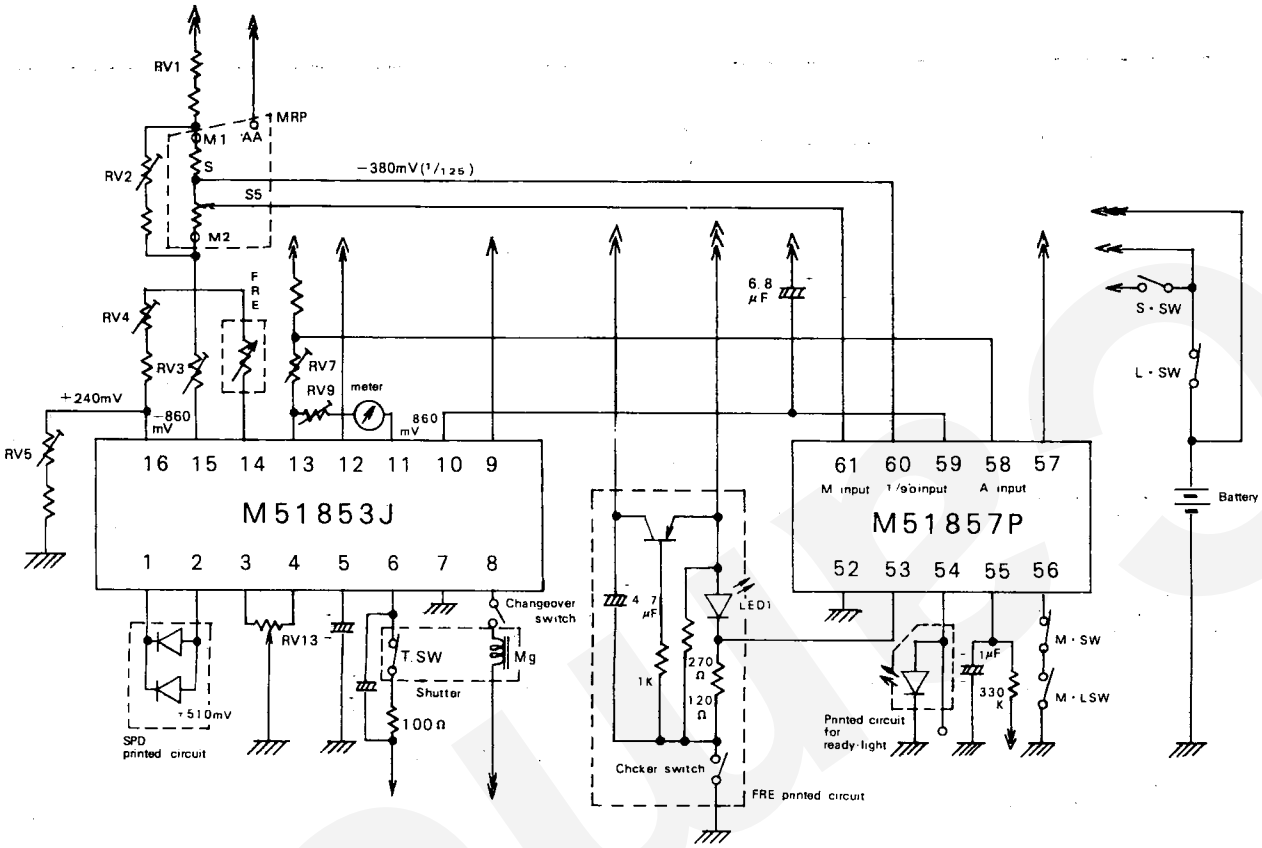

Voltage/Shutter speed relation (determined at computing circuit)

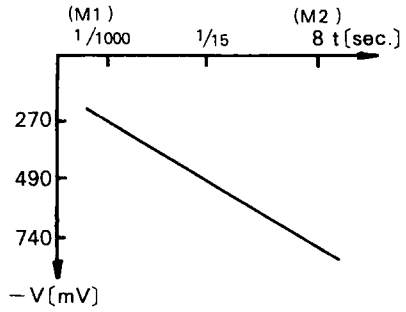

M51853 J:

for shutter speed control at Auto and Manual

for shutter speed indication inside the finder(meter)

M51857 P:

for battery check

for changeover between Auto and Manual

for memory or memory lock

for camera control for proper SB-10 operation

Voltage at 6 pin of M51853 J varies until it matches with the voltage(shutter speed) memorized in memory circuit as shown in the graph.

Voltage at pins 59 and 61 of M51857 P, and at pin 10 of M51853 J are traceable from the graph. When in use of SB-10 at Auto, voltage of approx. - 400mV(1/90)

6 IC Printed Circuit(M)

35FB - R.3012.A

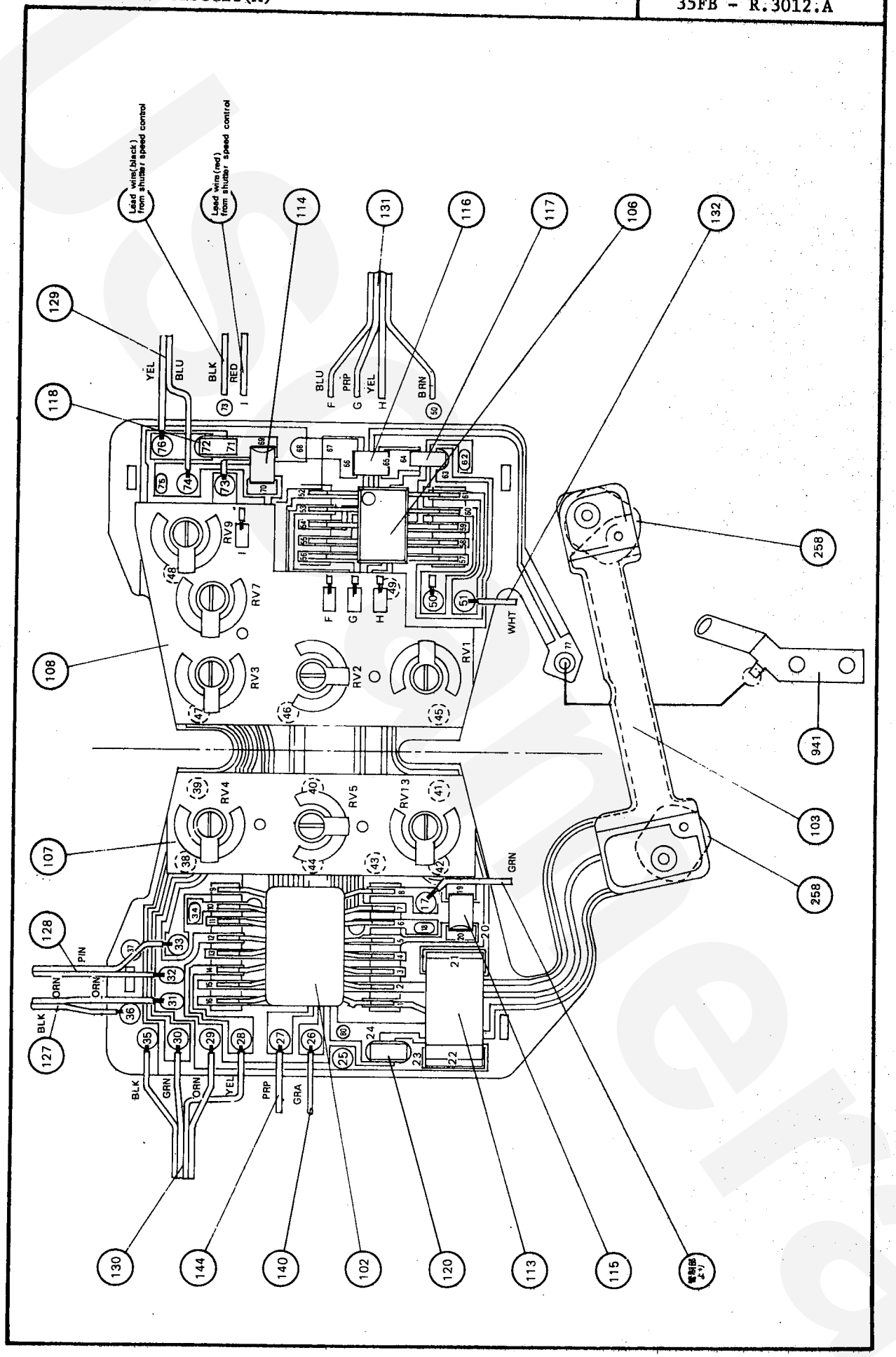

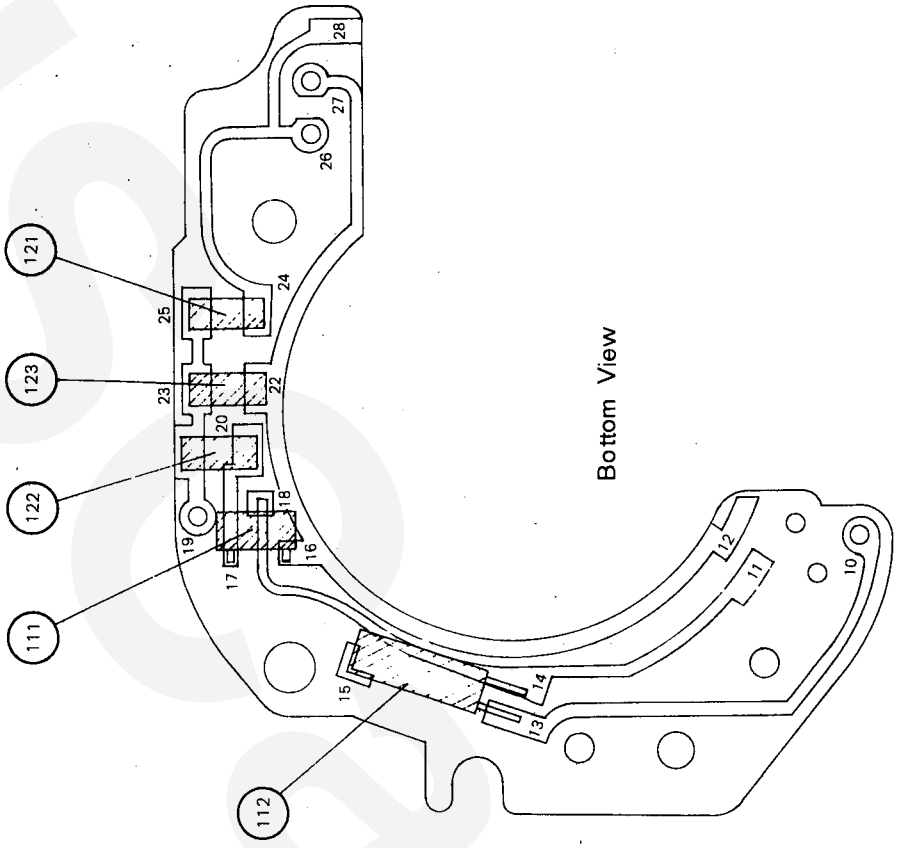
Bottom View
121
123
122
111
112
28
27
26
24
25
23
22
20
19
18
17
16
15
14
13
12
11
10

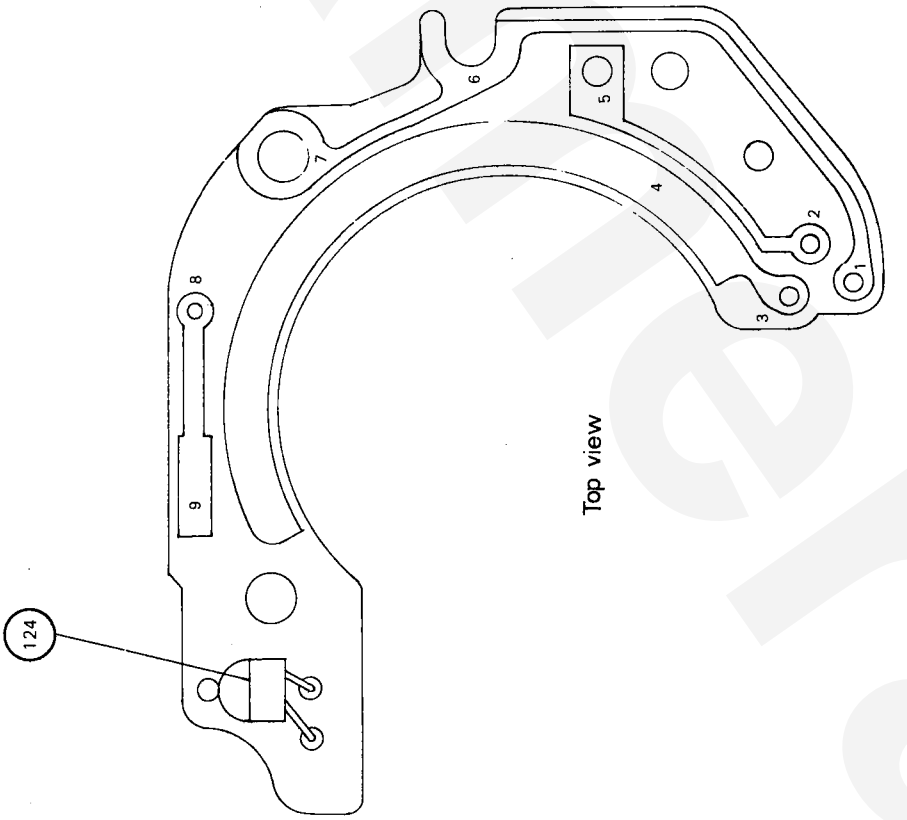
Top view
124
9
8
7
6
5
4
3
2
1

Classification Code: 000					
Auto	Manual	Meter	How to check	Cause	Code No.
			Failure of memory lock	Memory Lock cord, Black(#139) shorts to body	000-01-1
				Memory lock switch(#934) shorts to body	000-01-2
				Switch(#934) does not switch OFF	000-01-3
				Mirror switch(#928) shorts to body	000-01-4
			With Trigger switch ON, Icc of Approx. 15mA	Short between Orange and Pink shutter switch cords(#128)	000-02-1
				Short between terminals 12 and 33 or between 32 and 33 on #101	000-02-2
				Self-timer switch does not switch off	000-02-3
			with shutter switch ON, Icc of 40-45mA current flows	Short between Tr + and X on #100	000-03-1
			with lever switch OFF, Icc of Approx. 2mA Too fast battery consumption	Lever switch does not switch OFF	000-04-1
				Short between Red and Orange cords (#126)	000-04- 2
				Short between terminals 11 and 12 on #630	000-04-3
			with lever switch OFF, Icc of Approx.10mA or extremely large Icc. Too fast battery consumption checker always glow on or is broken	Checker cord, Purple (#144) shorts to body	000-05-1
			with checker switch ON, needle jumps down to B-M zone limit	Resistor C(#120) unsoldered between terminals 23 and 24 on #101	000-06-1
			Failure of checker LED illumination	Lead wire A, Red (#133)	000-07-1
				Cord, Red (#133) unsoldered from #49 or #630 12	000-07-2
				Checker resistor A(#121) unsoldered between 24 and 25 on #630	000-07-3
				Checker LED(#124) unsoldered from 26 or 27 on #630	000-07-4
				Short between 27 and 28 on #630	000-07-5
			With checker switch ON, LED glows down to Vcc of approx. 1.5V With lever switch ON Normal Vcc	Checker resistor B(#122) unsoldered between 20 and 21 on #630	000-08-1
				Base of transistor (#111) unsoldered from #630 17	000-08-2
				Emitter of #111 unsoldered from #630 16	000-08-3
				Corrector of #111 unsoldered from #630 18	000-08-4

Classification Code: 000			How to check	Cause	Code No.
Auto	Manual	Meter			
			With checker switch ON, LED glows down to Vcc of approx. 1.5V	FRE cord, Orange (#130) broken	000-09-1
				#130 (Orange) unsoldered from #101 (29) or #630 (11)	000-09-2
				Checker cord, purple (#144) broken	000-09-3
				#144(Purple) unsoldered from #101 (27) or #630 (28)	000-09-4
			By use of SB-10, Auto speed becomes Time. If set at manual speed, Ready-light turns on and off	Shutter speed control cord A Brown (#131) broken	000-10-1
				#131(Brown) unsoldered from #101 (50) or #570 [S]	000-10-2
			By use of SB-10, Ready-light fails to turn ON, and Auto speed does not become 1/90 sec.	Shoe connecting contact A(#941) shorts to body	000-11-1
				Poor contact of #941	000-11-2
				Signal contact (#77) in poor contact	000-11-3
			SB-10 does not flash	Synch cord A, Blue (#142)broken	000-12-1
				#142(Blue) unsoldered from #100 (X) or shoe connecting contact B(#942)	000-12-2
				Synch cord B, Blue(#143) broken	000-12-3
				#143(Blue) unsoldered from shoe connecting contact B(#942) or synch socket(#15)	000-12-4
				Poor contact of #942	000-12-5
				Upper and lower shoe switch contact (#69, #70) does not switch ON	000-12-6
				X contact on #100 does not switch ON	000-12-7
				Synch contact (#75) in poor contact	000-12-8
			Immediately when SB-10 charged, continuous flash output occures	Synch cord A, Blue(#142) shorts to body	000-13-1
				Synch cord B, Blue(#143) shorts to body	000-13-2
				Shoe connecting contact B(#942) shorts to body	000-13-3
				Lower shoe switch contact (#70) shorts to body	000-13-4
				X contact on #100 does not turn OFF	000-13-5
				#100(X) shorts to body	000-13-6
			When SB-10 connected to synch socket, electric shock occures at synch contact	Upper and lower shoe switch contact (#69, #70) does not switch OFF	000-14-1

Classification Code: 001			How to check	Cause	Code No.
Auto	Manual	Meter			
		No meter needle swing		Meter cord, Red on shutter speed control(R) broken	001-01-1
				Meter cord, Red on R unsoldered from #108 (I)	001-01-2
				Meter cord, Black on R broken	001-01-3
				Meter cord Black on R unsoldered from #101 (73)	001-01-4
				Meter coil on R broken	001-01-5
		With lever switch OFF, needle swings	With lever switch OFF, Icc of approx. 2mA	Lower switch does not turn OFF	001-02-1
				Lever switch cords(#126) short between Red and Orange	001-02-2
				Short between terminals (11) and (12) on #630	001-02-3
			With lever switch OFF, Icc of Approx.10mA or extremely large ICC. Checker LED always glows or is broken	Checker cord, Purple(#144) shorts to body	001-03-1

Classification Code: 010			How to check	Cause	Code No.
Auto	Manual	Meter			
	Becomes Auto speed		With SB-10 attached, warning lamp does not glows at Manual high speed	Short between terminals (51) and (57) on #101	010-01-1
				Short between [AA] and [S5] on #570	010-01-2

Classification Code: 011					
Auto	Manual	Meter	How to check	Cause	Code No.
	Time	Needle jumps up to the A-zone limit	With SB-10 attached, warning lamp does not glows at manual high speed. Auto and manual settings become Time	Shutter speed control cord A, yellow (#131) broken	011-01-1
				#131(yellow) unsoldered from #108 Ⓗ or #570 Ⓜ	011-01-2
		Needle swings Approx 8 steps toward A-zone	By use of SB-10, warning lamp does not glow at manual high speed at Auto, spprox. 1.4mS	Pattern of manual printed circuit(#570) broken between S and M2	011-02-1
			By use of SB-10, warnign lamp does not glow at certain speed down to 1/250sec. at manual high speed. At Auto, Time	Pattern of #570 broken between S and M1	011-03-1
	Failure of shutter opening	Needle jumps down to B-M zone limit		Short between #101 50 and #101 57	011-04-1
		Needle swings approx. 8 steps toward B-M zone			
	Auto	Needle jumps down to B-M zone limit	By use of SB-10, warning lamp does not glow at Manual high speed. AT Auto, failure of shutter openings	Short between Purple wire and Blue one of #131 cord A	011-05-1
				Short between #108 Ⓖ and #108 Ⓕ	011-05-2
				Short between #101 15 and #101 31 or between #101 15 and #101 32	011-05-3
		Needle swings 7 steps or more toward B-M zone	By use of SB-10, warning lamp does not glow at Manual high speed. At Auto, approx. 1.4mS.	Short between #101 51 and #101 57	011-06-1
				Short between #570 S5 and #570 AA	011-06-2
	Every setting becomes 1/1000sec.	Needle jumps up to A-zone limit	By use of SB-10, warning lamp does not glow at Manual high speed, At Auto, approx. 1.4mS	Shutter speed control cord A, Blue(#131) broken	011-07-1
				#131(Blue) cord unsoldered from #108 Ⓕ or #570 M2	011-07-2
		Needle jumps down to B-M zone limit		Short between #108 Ⓕ and RV 2	011-07-3
		Needle swings 12 steps toward B-M zone			
	Normal at 1/1000sec. and 8sec. only	Needle jumps down to B-M zone limit		Short between #570 M2 and #570 S5	011-08-1
		At Auto or Bulb, the faster the speed, the more the needle swings toward B-M zone			

Classification Code: 011					
Auto	Manual	Meter	How to check	Cause	Code No.
	Normal at 1/1000sec.and 1/125sec. only	Needle swings approx. 1 - 8 steps toward B-M zone		Short between #101 (50) and #101 (51)	011-09-1
	At higher speed above cartain speed, 1/1000. At lower speed below certain speed, Time	Needle jumps up to A-zone limit or Needle swings approx. 8 steps toward A-zone	By use of SB-10, warning lamp does not glow at Manual high speed. At Auto, approx. 1.4mS	Pattern of #570 broken between [S] and [M2]	011-10-1
			By use of SB-10, warning lamp does not glow at certain speed down to 1/250sec. At Auto, Time	Pattern of #570 broken between [S] and [M1]	011-11-1
	At higher speed above certain speed, 1/1000sec. At lower speed below certain speed, slower speed than normal (8sec. becomes 3sec.)	Needle swings approx. 1.3 steps toward B-M zone	By use of SB-10, warning lamp does not glow at Manual high speed. At Auto, approx.1.4mS	Shutter speed control cord A (#131) short between a Brown and a yellow cord	011-12-1
				Short between #570 [S] and #570 [M1]	011-12-2
	At higher speed above certain speed, same as Auto. At lower speed below certain speed, failure of shutter opening, or extremely high speed	Needle jumps down to B-M zone limit		Short between #101 (50) and #101 (57)	011-13-1
		Needle swings approx. 7 or 8 steps toward B-M zone		Shutter speed control cord A (#131) short between a yellow and a purple cord	011-13-2
				Short between #108 (G) and #180 (H)	011-13-3
				Short between #570 [M1] and #570 [AA]	011-13-4

Classification Code: 100			How to check	Cause	Code No.
Auto	Manual	Meter			
			Failure of memory lock	Mirror switch cord, Grey (#140) shorts to body	100-01-1
				Mirror switch A(#927) shorts to body	100-01-2
				Mirror switch A(927) does not switch OFF	100-01-3
			Even in use of SB-10, Auto speed becomes Time	Memory lock cord, Black (#139) broken	100-02-1
				#139(Black) unsoldered from memory switch A(#934) or mirror switch B(#928)	100-02-2
				Mirror switch cord, Grey(#140) broken	100-02-3
				#140 cord(Grey) unsoldered from #101 (26) or Mirror switch A(#927)	100-02-4
				Mirror switch does not turn ON	100-02-5
				Memory switch A(#934) does not turn ON	100-02-6
			With lever switch OFF, Icc becomes extremely large or approx. 10mA. Checker LED always glows or breaks. Faster battery consumption	Short between #101 (26) and #101 (27)	100-03-1
				Shutter speed control cord A, Purple (#131) broken	100-04-1
				#131 cord (Purple) unsoldered from #108 (G) or #570 [AA]	100-04-2
Slower speed			Failure of memory lock	Mirror switch cord, Grey(#140) shorts to body	100-05-1
				Mirror switch shorts body	100-05-2
				Mirror switch does not turn OFF	100-05-3
Erratic speed			Even with SB-10 used, Auto speed becomes Time	Memory lock cord, Black (#139) broken	100-06-1
				#139 cord (Black) unsoldered from memory switch A(#934) or mirror switch B(#928)	100-06-2
				Mirror switch cord, Grey(#140) broken	100-06-3
				#140 cord(Grey) unsoldered from #101 (26) or mirror swith A(927)	100-06-4
				Mirror switch does not switch ON	100-06-5
				Memory switch (#934) does not turn ON	100-06-6
A few steps slower speed				Short between #108 (I) and RV (7)	100-07-1

Classification Code: 101			How to check	Cause	Code No.
Auto	Manual	Meter			
		Needle jumps down to B-M zone limit	With lever switch ON Icc becomes approx 30mA	Meter cord, Red on shutter speed control broken	101-01-1
				Short between #101 (26) and #101 (30)	101-02-1
		Needle jumps up to A-zone limit	With lever switch ON, Icc becomes approx. 30mA	Meter cord, Black on shutter speed control shorts to body	101-03-1
Shutter does not open		Needle jumps up to A-zone limit		Short between #101 (16) and #101 (30)	101-04-1
				FRE cord #130 short between a yellow and a Green cord	101-04-2
				Short between #630 (3) and #632 (2), or between #630 (2) and #630 (4)	101-04-3
				Short between #101 (16) and #101 (28)	101-04-4
A few steps longer speed		Needle swings 1/3 step toward A-zone than normal		Short between #108 (I) and RV (7)	101-05-1
Extraordinary speed		Needle jumps up to A-zone limit	With shutter switch ON Icc becomes approx. 16mA	Short between #101 (17) and #101 (20)	101-06-1
At EV4, approx. 1/1000		Needle swings approx. ten steps toward A-zone	Auto speed varies by rotation of FRE	Short between #101 (16) and #101 (30)	101-07-1
			Auto speed does not vary by rotation of FRE	FRE cord #130 shorts between a yellow and a Green cord	101-08-1
				Short between #630 (2) and #630 (3), or between #630 (2) and #630 (4)	101-08-2
Extraordinary speed		No Needle swing	With lever switch ON, extremely large Icc. With checker switch ON, extremely large Icc. No LED illumination	Short between #101 (25) and #101 (26)	101-09-1

Classification Code: 110			How to check	Cause	Code No.
Auto	Manual	Meter			
Time	Time		With lever switch ON, Icc of approx, 15mA. At M90 or Bulb, Time	Mech. speed changeover switch cord, purple, on shutter speed control shorts to body	110-01-1
				#100 (Mg-) shorts to body	110-01-2
			With lever switch ON, Icc of approx. 15mA	Changeover switch cord, green, on shutter speed control shorts to body	110-02-1
				Short between #101 (17) and #101 (19)	110-02-2
				Short between #100 (Mg+) and #100 (Tr-)	110-02-3
			In use of SB-10, warning lamp does not light at manual high speed	Shutter speed control cord B, White (#132) broken	110-03-1
				#132 cord(White) unsoldered from #101 (51) or #570 [S5]	110-03-2
				Trigger switch does not switch OFF	110-04-1
				Trigger switch cord(#129)shorts between a yellow and a blue cord	110-04-2
				Short between #101 (74), (75) and #101 (72), (76)	110-04-3
				Short between #100 (Tr+) and #100 (Tr-)	110-04-4

Classification Code: 110			How to check	Cause	Code No.
Auto	Manual	Meter			
Failure of shutter opening	Failure of shutter opening		With trigger switch ON, Icc of approx. 35mA	Trigger switch cord, Blue(#129) shorts to body	110-05-1
				#100 (Tr-) shorts to body	110-05-2
			With shutter switch ON, extremely large Icc	Shutter switch (#926) shorts to body	110-06-1
				Shutter switch cord, Pink(#128) shorts to body	110-06-2
			With shutter switch ON, Icc of approx. 100mA	Short between #100 (Mg+) and #100 (Mg-)	110-07-1
			With shutter switch ON, Icc of approx. 35mA	#100 (Tr+) shorts to body	110-08-1
				Trigger switch cord, yellow (#129) shorts to body	110-08-2
			With shutter switch ON, Icc of approx. 3-5mA	Short between #101 (33) and #101 (10), or between #101 (33) and #101 (34)	110-09-1
				Magnet coil of #100 broken	110-09-2
				Mech. speed changeover switch cord, purple, on shutter speed control broken	110-09-3
				Mech. speed changeover switch cord (Purple) unsoldered from #100 (Mg-)	110-09-4
				Mech. speed changeover switch cord (Green) on shutter speed control broken	110-09-5
				Mech. speed changeover switch cord (Green) on shutter speed control unsoldered from #101 (17)	110-09-6
			Icc when shutter switch switched ON is same as Icc when lever switch switched ON	Shutter switch cord, Orange (#128) broken	110-10-1
				#128 cord (Orange) unsoldered from #101 (32) or shutter switch A(#925)	110-10-2
				Shutter switch cord, Pink (#128) broken	110-10-3
				#128 cord (Pink) unsoldered from #101 (31) or shutter switch B(#926)	110-10-4
				Shutter switch does not switch ON	110-10-5
				Trigger switch does not switch ON	110-10-6
				Trigger switch cord, yellow (#129) broken	110-10-7
				#129 cord (yellow) unsoldered from #101 (76) or #100 (Tr+)	110-10-8
				Trigger switch cord, Blue(#129) broken	110-10-9
				#129 cord (Blue) unsoldered from #101 (74) or #100 (Tr-)	110-10-0

Classification Code: 111			How to check	Cause	Code No.
Auto	Manual	Meter			
Failure of shutter opening	Failure of shutter opening	No needle swing	With lever switch OFF, extremely large Icc	Lever swith cord, Red(#126) shorts to body	111-01-1
				Plus cord A, Red(#133) shorts to body	111-01-2
				Plus cord B, Red(#134) shorts to body	111-01-3
				Lever switch (#487) shorts to body	111-01-4
				Battery contact B ⊕ (#49) shorts to body	111-01-5
				MD external contact lug(#919) shorts to body	111-01-6
			With lever switch ON, extremely large Icc (Measure the Icc by disconnecting power supply cord, orange (#127) from #101 31) No resistance (0Ω) between #127 and body	Lever switch cord, Orange(#126) shorts to body	111-02-1
				Power source cord, Orange(#127) shorts to body	111-02-2
				Magnet plus cord, Orange(#135) shorts to body	111-02-3
				Lever switch (#488) shorts to body	111-02-4
				#100 (Mg+) shorts to body	111-02-5
				Power supply cord(#127) shorts between a Orange and a black cord	111-02-6
			With lever switch ON, extremely large Icc. No resistance (0Ω) between #101 31 and body	Shutter switch cord, Orange(#128) shorts to body	111-03-1
				FRE cord, Orange (#130) shorts to body	111-03-2
				Shutter speed control cord, purple (#131) shorts to body	111-03-3
				#570 [AA] shorts to body	111-03-4
				Shutter switch (#925) shorts to body	111-03-5
				Short between #101 (31), (32) and #101 (35), (36)	111-03-6
			No Icc observed. Checker LED does not illuminate	Power supply cord, Black(#127) broken	111-04-1
				#127 cord, Black(#127) un-soldered from #101 (36) or Battery chamber earth contact (#45-1)	111-04-2
				Battery plus contact B(#49) in poor contact	111-04-3
				Battery earth contact (#45-1) in poor contact	111-04-4
			No Icc observed	Lever switch cord, Red(#126) broken	111-05-1
				#126 cord(Red) unsoldered from Lever switch (#487) and MD external contact lug (#919)	111-05-2
				Lever switch cord, Orange (#126) broken	111-05-3

Classification Code: 111			How to check	Cause	Code No.
Auto	Manual	Meter			
Failure of shutter opening	Failure of shutter opening	No needle swing		Lever switch cord, Orange(#126) unsoldered from Lever switch (#488) or external contact lug (#919)	111-05-4
				Power source cord, Orange(#127) broken	111-05-5
				#127 cord (Orange) unsoldered from #101 (31) or the contact lug (#919)	111-05-6
				Plus cord B, Red (#134) broken	111-05-7
				#134 cord (Red) unsoldered from battery contact B ⊕ (#49) or the external contact lug (#919)	111-05-8
				Lever switch does not turn ON	111-05-9
		Needle jumps up to A-zone limit Needle swings toward A-zone away from normal position	With lever switch ON, Icc of approx. 10mA	Short between #101 (73) and #101 (70), or between #101 (73) and #101 (74)	111-06-1
		Needle swings approx. one step toward B-zone away from normal position	With lever switch ON, Icc of approx. 5mA. With trigger switch ON, Icc of approx. 8mA.	Short between #101 (17) and #101 (6), or between #101 (17) and #101 (18)	111-07-1
		Needle jumps up to A-zone limit	With lever switch ON, extremely large Icc (at auto speed) With lever switch ON, normal Icc (at manual)	Shutter speed control cord B, White(#132) shorts to body	111-08-1
		No needle swing		#570 [S5] shorts to body	111-08-2
			Unsoldering FRE cords, yellow and green(#130) from IC printed circuit, measure the resistance. If infinity value detected, one of the causes to the right considerable Normal value: approx. 9.45 K at ASA 100, F5.6	Yellow or Green FRE cord (#130) broken	111-09-1
				Sliding brush A(#685) in poor contact	111-09-2
				Brush A(#682) in poor contact	111-09-3
				Sliding brush B(#698) in poor contact	111-09-4
				Sliding brush A(#685) unsoldered from #630 (5)	111-09-5
				FRE(#680) unsoldered from FRE conducting plate(#684)	111-09-6
				FRE cord, yellow (#130) unsoldered from #630 (3)	111-09-7
				FRE cord, green(#130) unsoldered from #630 (2)	111-09-8
				FRE cord, yellow(#130) undoldered from #101 (28)	111-10-1

Classification Code: 111			How to check	Cause	Code No.
Auto	Manual	Meter			
Time	Time	Needle jumps down to B-M zone limit		FRE cord, Green(#130) unsoldered from #101 ㉚	111-10-2
				Short between #101 ⑯ and one of #101 ㉙, ㉛, ㉜	111-10-3
				Short between #101 ㉗ and #101㉘	111-10-4
				Short between #101 ㉚ and on of #101 ㉙, ㉛	111-10-5
				Short between #101 ⑭ and one of #101 ㉛, ㉜	111-10-6
				Short between #101 ㉘ and #101 ㉙	111-10-7
				Short between Green and Yellow FRE cord(#130)	111-10-8
Extraordingary speed	Time	Needle jumps up to A-zone limit	With SB-10 used, manual high speed warning lamp does not glow. Both at Auto and Manual, Time	Shutter speed control cord, Yellow(#131) shorts to body	111-11-1
				#570 M1 shorts to body	111-11-2
			When SB-10 used, warning lamp glows properly at Manual high speed. At Auto and Manual, Time 1 - 2mA higher Icc than normal	Shutter speed control cord, Brown (#131) shorts to body	111-12-1
				#570 S shorts to body	111-12-2
				FRE cord, Green(#130) shorts to body	111-12-3
				FRE conducting plate (#684) shorts to body	111-12-4
				Sliding brush A(#685) shorts to body	111-12-5
				FRE cord (#130) shorts between a Green and a Black cord	111-12-6
				Short between #101 ㉚ and #101 ㉟	111-12-7
				Short between #630 ① and #630 ②	111-12-8
			When SB-10 used, warning lamp glows properly at Manual high speed. At Auto and Manual, Time (Normal Icc)	Shutter speed control cord, Blue(#131) shorts to body	111-13-1
				#570 M2 shorts to body	111-13-2
				FRE cord, Yellow (#130) shorts to body	111-13-3
				Brush A(#682) or Brush mount (#683)	111-13-4
				Sliding brush B(#698) shorts to body	111-13-5
				Short between one of #630 ①, ⑥, ⑦ and one of ③, ④	111-13-6
				Short between one of #630 ⑥, ⑦ and #698 brush B	111-13-7
				Short between #630 ④ and checker switch (#633)	111-13-8
	1/4 - 1EV longer speed than normal	Needle jumps up to A-zone limit by 5 steps with lever switch on, and 7 steps with Trigger switch ON	With shutter switch ON, Icc of approx. 30mA	Short between #101 ⑪ and #101 ㉝	111-14-1
				Short between #101 ⑦① and #101 ⑦③	111-14-2
	High speed slower than normal Low speed, normal	Needle jumps up to A-zone limit	With shutter switch ON Icc of approx. 16mA	Short between #101 ⑰ and #101 ⑳	111-15-1

Section VI. Inspection Standard

INSPECTION STANDARD FOR REPAIR

Item	Position	Subject	Tool
Wind-up & Shutter release Mechanism	Wind-up lever	Wind-up touque: Within 1.5kg.cm (No film loaded) Within 4.5kg.cm (Film loaded)	Torque meter
	Spool	Spool friction: 200 - 260g	J15003
	Sprocket	Sprocket slack (at wind-up limit): within 0.8mm at top of tooth	J18064
	Wind-up coupling	Wind-up angle at start: -1° - +2° at wound-up: 132° - 138° Wind-up torque: Equal to or less than the torque on wind-up lever.	Torque meter
	Rewind button	To be set at the position pushed 2.7mm above bottom cover surface	Vernier
	Rewind crank	Friction toruqe when no film loaded: 25 - 40g.cm	J5018
	Shutter release button	Shutter-release force: 240 - 400g	J5019
		Full Stroke: 2.7 ±0.3mm	J18002
		Release stroke: Shutter should be released when the button depressed below #468 down to 0.4mm above #469 (Button's stroke: Approx.1.7mm)	
	MD releasing shaft	Shaft protrusion height: $0.7^{+0.3}_{-0.2}$ mm	Vernier
		Shaft-actuating power 500g or less	Vernier
		Shaft's height to release shuttrr above bottom plate surface: 3.4mm or less	Vernier
Shutter Accuracy	Exposure time		J19022-1 When in use of different model from J19022-1: Auto Measure between EV14 and EV15. 1/1000, 4, 8sec.: ±0.65EV 1/500 - 2sec.: ±0.5EV MANUAL 1/1000 - 1/250 sec.: ±0.525EV 1/125: +0.525EV -0 EV 1/60 - 8sec.: ±0.35EV

Shutter speed setting (or theoretical speed	Standard	Allowance (ms) Auto	Allowance (ms) Manual
1000	0.98	0.62- 1.54	0.68- 1.41
500	1.95	1.38- 2.76	1.36- 2.81
250	3.91	2.76- 5.53	2.72- 5.63
125	7.81	5.53- 11.0	7.81- 11.2
60	15.6	11.0 - 22.1	12.2 - 19.9
30	31.3	22.1 - 44.3	24.6 - 39.9
15	62.5	44.2 - 88.4	49.0 - 79.7
8	125	88.4 - 177	98.1 - 159
4	250	174 - 354	196 - 319
2	500	354 - 707	392 - 637
1	1000	707 - 1414	785 - 1275
2	2000	1414 - 2828	1569 - 2549
4	4000	2549 - 6277	3138 - 5098
8	8000	5098 -12553	6277 -10190

Item	Position	Subject	Tool
Shutter Accuracy	Shutter speed difference	Shutter speed difference between the adjacent settings: 1/1000 - 1/125sec.:1.2 - 3.4 times 1/60 - 8sec: 1.4 - 2.8 times	J19022-1
	Uneven exposures (in one frame)	Allowable exposure difference: Max. 0.25EV among the values measured at Start(S), Center(C) and End(E), setting to 1/1000sec.	J19033
	Uneven exposures (among frames)	When measured at Auto-speed 1/15sec., ASA100, F5.6 and LV9 five times, the speed deviation should be within 10ms.	J19022-1
	Self-timer	Can be set for 8 - 14sec. delay. Setting "Cancellable" by manually rotating back self-timer lever to the memory-lock position.	Stop-watch
	X contact	Time lug: 0.3 - 1.0ms(Full open: 2.2ms or more)	J19008-1
		Contact efficiency:70% or more(specified 1ms, 2.5ms)	J19028-1
		Insulation: 30MΩ or higher	
Exposure meter accuracy	Needle indication accuracy	ASA100 compensation 0	J19022-1 J18041-1
		cd/m^2 / EV / F No. / Meter needle indication	
		2 / 4 / F8 / To be within the range of the center "0" of the digit 1000	
		2040 / 14 / F4 / To be within the range of "4"	
		In case of the other combinations of the settings, meter needle should be within the range of the digit to show theoretical speed.	
	Meter needle Starting position	With lever switch OFF, the needle should be locked above the center of B-M zone.	Visual Inspection
	Infinity( ) coincidence	Coincidence:±30" Conspicuous blurs should not be visible at four corners of the viewfinder.	J19001 J18010
	Parallax	Parallax: Within 0.5mm vertically and horizontal	J18006 Lens: 50mmf1.4
	Frame coverage	At least 93% vertically and horizontally at the center of the viewfinder	
	Viewfield frame	Inclination: within 1°30'	
	F No.window position	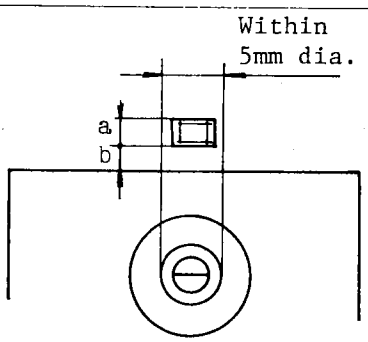 F No. window position Sideways: Within 5mm dia. of split-image spot Height : b=0.3a-1.5a Position of frame on J18063 Within the F No.window The window's inclination should not be conspicuous	J18063 Visual inspection

Item	Position	Subject	Tool
Finder accuracy	Shutter speed film position	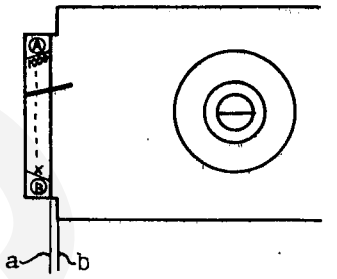 The film and (a) and finder frame end (b) should be aligned within an allowable interval of max.0.2mm. (a) should not exceed (b). Vertical deviation of the film not allowed.	Visual inspection
	Green needle and speed indication digit alignment	Meter needle should overlay at least half of the hight of speed digits or letter (A, B, M). Be sure to check at click position. 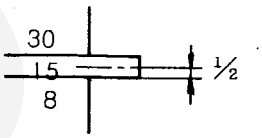	Visual inspection
Lens mount	Aperture coupling lever	Height: $3.1^{+0.1}_{-0}$mm(after shutter cocking) 3.5mm or less(Before shutter cocking) Height difference between after and before shutter cocking: 0.15mm or more	J18004
		Stroke: 7.1mm or more	
		Power to depress the lever: 90 - 120g at 3.1mm height	J18003
	Aperture coupling ring	Start position $52.5^{\circ}{}^{+0^{\circ}}_{-1^{\circ}}$	J18063
		Max. rotation angle $112.5^{\circ}{}^{+3^{\circ}}_{-1^{\circ}}$	J18058
		Rotation torque Min. aperture direction 950g·cm Max. aperture direction 100 - 350g·cm	J18058
	Back focus	Flange back dimension 46.67 ±0.2mm	J18001-1
		Parallelism allowance within 0.02mm	
		Height difference between outer and inner rails 0.23 ±0.02mm	
Others	Battery checker	Lowest voltage for illumination: 2.25 ±0.15 (with lever switch ON)	J19024
	Ready light	Shutter dial setting — LED Auto — ON 1/1000 - 1/250 (Manual) — OFF 1/125 - B (Manual) — ON	J15147
	Pressure plate	Flatness within 0.02mm	

uscamera