MINOLTA DYNAX 500si SUPER (2151–100)
MINOLTA DYNAX 500si SUPER DATE (2151–200)
MINOLTA α 303si SUPER (2151–600)

CAMERA

Type : 35mm SLR with control of autofocus (AF) and autoexposure (AE) and built in flash

LENS MOUNT : Minolta A type bayonet mount

SHUTTER

Type : Electronically–controlled, vertical–traverse focal–plane type
Range : 1/2000 to 30 sec., Bulb
Flash sync speed : 1/90 sec.
Self–timer : Electronic with 10 sec. delay indicated by flash bursts; cancelable

BUILT–IN FLASH : Manual up and down
Guide number : 12
Coverage : For 28mm focal length
Recycling time : Approx. 2 sec. (Based on Minolta's standard test method)

Program, Portrait, Landscape } mode control : When flash is up, it fires automatically in low–light/backlit; fill–flash available.

Close–up, Sports } mode control : When flash is up, it fires automatically in low–light; fill–flash available.

Night–portrait, A, S, M } mode control : When flash is up, it always fires.

Other features : Pre–flash for red–eye reduction, wireless flash control available

Film transport

Threading : Automatic threading and advance to first frame
Film advance : Single–frame or Continuous advance up to 1 frame/sec., Double exposure
Film rewind : Automatic rewind; Manual start of automatic rewind possible
Rewind time : Approx. 19 sec. for 24–exp. film
Battery performance (Approximately; based on Minolta's standard test method)
: 45 rolls (24–exp. film, flash use 0%)
20 rolls (24–exp. film, flash use 50%)
13 rolls (24–exp. film, flash use 100%)

VIEWFINDER

Type	: Roof mirror type
Focusing screen	: Acute mat screen with focus frame and spot metering area
Field of view	: 90%
Magnification	: 0.75× (with 50mm lens at infinity)
Diopter	: –1 diopter (Eyepiece Corrector available)
Eyepiece cup	: Soft type
Indication for panorama (–600)	: Light–shielding panorama frame

Displays

Data Panel

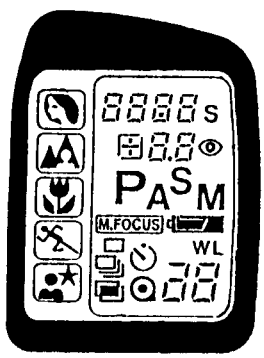

Viewfinder

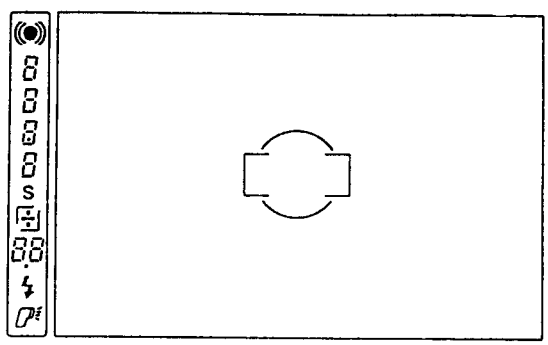

EXPOSURE CONTROL SYSTEM

Metering	: TTL type; 8–segment honeycomb pattern silicon photocell (SPC), panorama format compensation; Second SPC (SPC2) for TTL flash metering
Metering range	: EV 1 to 20 EV 4 to 20 for spot metering ※ISO 100, F1.4 lens
Exposure mode	: P, A, S, M
Subject program mode	: Portrait, Landscape, Close–up, Sports, Night–portrait
Manual setting	: Shutter speed: 1–stop increments, Aperture: 1/2–stop increments
Film speed setting	: Automatic setting for DX coded films: ISO 25 to 5000, Manual setting: ISO 6 to 6400 (in 1/3–stop increments); Non–DX coded film is set to a previous film speed; Recommended range for flash: ISO 25 to 1000
Exposure compensation	: ±3EV (in 1/2–stop increments)
AE lock	: AE locks when focus is locked and while Spot Button is pressed

AF SYSTEM

Type	: Minolta's TTL phase–detection system with one CCD line sensor
Sensitivity	: EV –1 to 18 (ISO 100)
Focus mode	: Auto or manual focus selectable
AF illuminator	: Built–in flash type; automatically activated in low–light/low–contrast condition; Automatically changed to AF illuminator of a dedicated flash unit when it is attached. Range: Approx. 1 to 5m (50mm lens; Based on Minolta's standard test method)
Focus lock	: Focus locks when the Shutter–Release Button is pressed partway down.

OTHER FEATURES

Remote–Control Terminal

Autozoom (with xi–series lens)

: Auto–compact

Panorama (–600) : Selected by Panorama Switch; light shielding type; data imprinting position changes accordingly

POWER

Battery	: One 6V 2CR5 lithium battery
Battery for Data Back	: One CR2025 lithium battery
Battery condition check	: Battery–condition indicator appear in 4–step at Main Switch ON.

DIMENSIONS

–100	: 147mm(W)×92.5mm(H)×66.5mm(D)
–200	: 147mm(W)×92.5mm(H)×67.5mm(D)
–600	: 148.5mm(W)×92.5mm(H)×67.5mm(D)

WEIGHT

–100	: 400g (without battery)
–200	: 405g (without 2CR5, including CR2025)
–600	: 415g (without 2CR5, including CR2025)

MINOLTA DYNAX 500si SUPER (2151–100)
MINOLTA DYNAX 500si SUPER DATE (2151–200)
MINOLTA α 303si SUPER (2151–600)

CAMERA

Type : 35mm SLR with control of autofocus (AF) and autoexposure (AE) and built in flash

LENS MOUNT : Minolta A type bayonet mount

SHUTTER

Type : Electronically–controlled, vertical–traverse focal–plane type
Range : 1/2000 to 30 sec., Bulb
Flash sync speed : 1/90 sec.
Self–timer : Electronic with 10 sec. delay indicated by flash bursts; cancelable

BUILT–IN FLASH : Manual up and down
Guide number : 12
Coverage : For 28mm focal length
Recycling time : Approx. 2 sec. (Based on Minolta's standard test method)

Program, Portrait, Landscape } mode control : When flash is up, it fires automatically in low–light/backlit; fill–flash available.

Close–up, Sports } mode control : When flash is up, it fires automatically in low–light; fill–flash available.

Night–portrait, A, S, M } mode control : When flash is up, it always fires.

Other features : Pre–flash for red–eye reduction, wireless flash control available

Film transport

Threading : Automatic threading and advance to first frame
Film advance : Single–frame or Continuous advance up to 1 frame/sec., Double exposure
Film rewind : Automatic rewind; Manual start of automatic rewind possible
Rewind time : Approx. 19 sec. for 24–exp. film
Battery performance (Approximately; based on Minolta's standard test method)
: 45 rolls (24–exp. film, flash use 0%)
20 rolls (24–exp. film, flash use 50%)
13 rolls (24–exp. film, flash use 100%)

VIEWFINDER

Type	: Roof mirror type
Focusing screen	: Acute mat screen with focus frame and spot metering area
Field of view	: 90%
Magnification	: 0.75× (with 50mm lens at infinity)
Diopter	: –1 diopter (Eyepiece Corrector available)
Eyepiece cup	: Soft type
Indication for panorama (–600)	: Light–shielding panorama frame

Displays

Data Panel

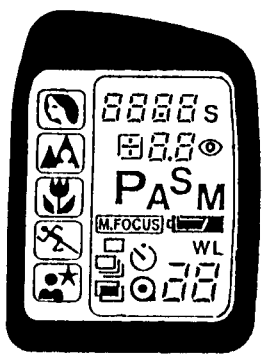

Viewfinder

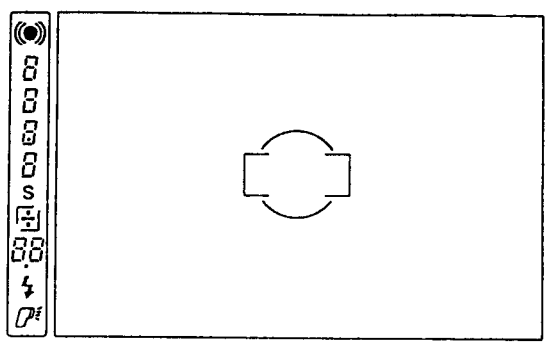

EXPOSURE CONTROL SYSTEM

Metering	: TTL type; 8–segment honeycomb pattern silicon photocell (SPC), panorama format compensation; Second SPC (SPC2) for TTL flash metering
Metering range	: EV 1 to 20 EV 4 to 20 for spot metering ※ISO 100, F1.4 lens
Exposure mode	: P, A, S, M
Subject program mode	: Portrait, Landscape, Close–up, Sports, Night–portrait
Manual setting	: Shutter speed: 1–stop increments, Aperture: 1/2–stop increments
Film speed setting	: Automatic setting for DX coded films: ISO 25 to 5000, Manual setting: ISO 6 to 6400 (in 1/3–stop increments); Non–DX coded film is set to a previous film speed; Recommended range for flash: ISO 25 to 1000
Exposure compensation	: ±3EV (in 1/2–stop increments)
AE lock	: AE locks when focus is locked and while Spot Button is pressed

AF SYSTEM

Type	: Minolta's TTL phase–detection system with one CCD line sensor
Sensitivity	: EV –1 to 18 (ISO 100)
Focus mode	: Auto or manual focus selectable
AF illuminator	: Built–in flash type; automatically activated in low–light/low–contrast condition; Automatically changed to AF illuminator of a dedicated flash unit when it is attached. Range: Approx. 1 to 5m (50mm lens; Based on Minolta's standard test method)
Focus lock	: Focus locks when the Shutter–Release Button is pressed partway down.

OTHER FEATURES

Remote–Control Terminal

Autozoom (with xi–series lens)

: Auto–compact

Panorama (–600) : Selected by Panorama Switch; light shielding type; data imprinting position changes accordingly

POWER

Battery	: One 6V 2CR5 lithium battery
Battery for Data Back	: One CR2025 lithium battery
Battery condition check	: Battery–condition indicator appear in 4–step at Main Switch ON.

DIMENSIONS

–100	: 147mm(W)×92.5mm(H)×66.5mm(D)
–200	: 147mm(W)×92.5mm(H)×67.5mm(D)
–600	: 148.5mm(W)×92.5mm(H)×67.5mm(D)

WEIGHT

–100	: 400g (without battery)
–200	: 405g (without 2CR5, including CR2025)
–600	: 415g (without 2CR5, including CR2025)

■Adjustment/check required after repair

☆ : Check required after repair
★ : Adjustment required after repair

ADJUSTMENT/CHECK	Mirror Box Assy		Shutter Unit	Aperture Base Plate Unit	FPC–A Assy	FPC–B Set	Penta–Prism Assy	AF Motor Base Unit	Top Cover Assy	XE Tube	Flash Converter PCB Set
	Removed	Replaced	Replaced	Replaced	Replaced	Replaced	Replaced	Replaced	Replaced	Replaced	Replaced
Body back	☆	★	☆	★	☆	☆		★			
Viewfinder back		☆					☆				
Manual set SS		★	★		★						
Aperture preset		☆		★	★						
AE		☆	★		★		☆				★
Flash level		★			★				★	★	★
Pre–flash level					★				★	★	★
Wireless flash level					★				★	★	★
AF	☆	★	★	★	☆	★	★	☆			★
B. C.–lock voltage					★						★

■Preparation Before Adjustment–1

■Equipments required

: Luminance Source
: Shutter Tester
: EE Tester
: 1000mm Collimator
: Digital Multimeter
: Strobe Tester
: Master Lens
: Xi–series PROGRAM/MAXXUM FLASH
: DC Power Supply
: Guide No. Adjusting Jig
: 2CR5 Type Power Supply Adapter
: 2CR5 Type Power Supply Adapter for B. C. Adjustment
: HIT Controller
: ROM PACK for 2092
: Contact Jig–C for HIT
: I/F BOX for HIT
: Body Signal Adapter (with X–contact)
: AEF Signal Adapter Ⅳ
: X Cable
: Body Back Gauge
: Body Back Flat Plate–A
: Dial Gauge
: Reflection Paper
: Hexagon Wrench (ϕ1.5)
: Film (Kodacolor GOLD 100 exposed in a room for more than 1 day)

※Jig numbers and models are listed in Tools and Instrument (P. 40).

■Instruction for using HIT system

※Make sure that no battery is installed in camera before setting up the HIT system.

1. Set up the equipments as in Fig. 1.
2. Attach HIT Contact Jig–C so its probes contact with the check lands of the camera, then affix them with magic tape.
3. Insert a battery or connect 2CR5–Type Power Supply Adapter to the camera, then turn the camera and HIT Controller on. Main menu appears in LCD (Fig. 2).
4. Select an item using Control Pad so the selected item will appear in a black box. Then press SELECT Button to enter.

   ※After setting up the equipments, perform "LCD Displays Check" (P. 34) and check for correct connection.

■Fig. 1

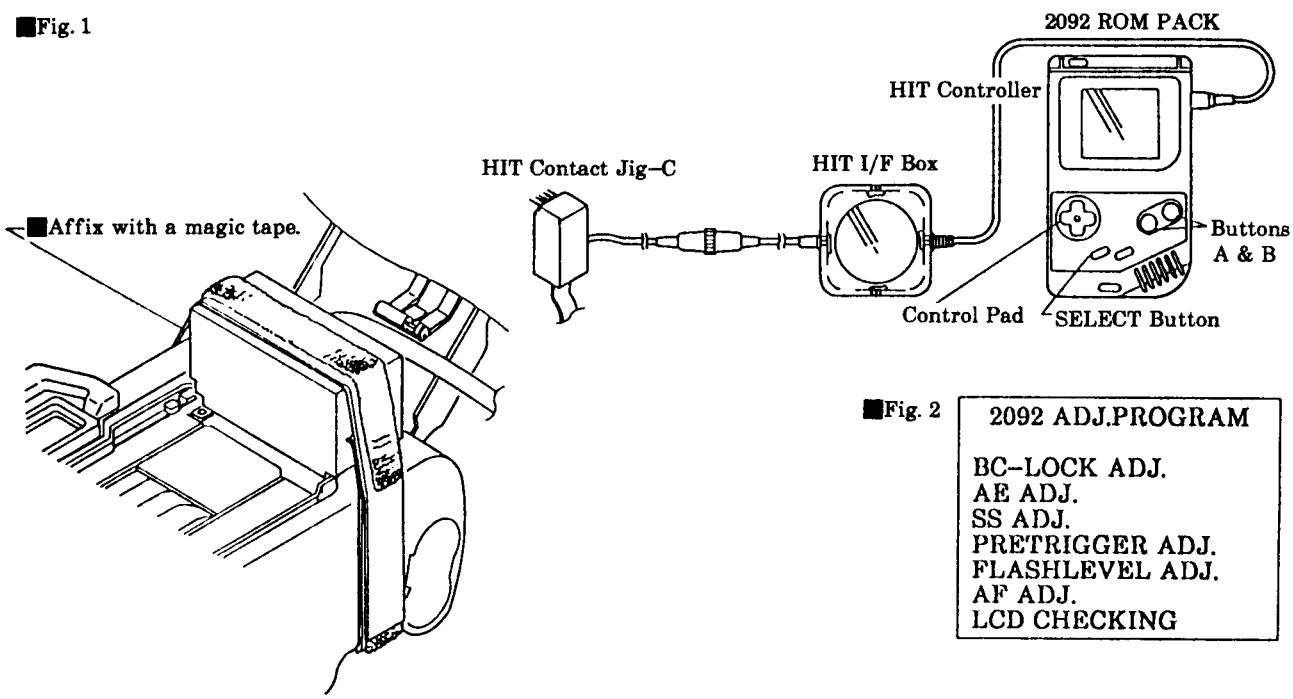

■Fig. 2

2092 ADJ.PROGRAM
BC–LOCK ADJ.
AE ADJ.
SS ADJ.
PRETRIGGER ADJ.
FLASHLEVEL ADJ.
AF ADJ.
LCD CHECKING

■Body Back Adjustment– I

■Equipments required

: Body Back Gauge
: Body Back Flat Plate–A
: Dial Gauge

■Check

1. Set Dial Gauge as in Fig. 1.
2. Measure distance between guide rail and bayonet mount surface (body back) as in Fig. 2.
3. Check that the reading is within the standard range below.
   ※If not, adjust the body back as follows.

■Adjustment

1. Adjust Body Back as follows:
   - To increase Body Back: Add Adjustment Washer (s) beneath the bayonet mount.
   - To decrease Body Back: Replace the Bayonet Mount with the one for service #2072–1010–71 (*), and install/remove the Adjustment Washers.
     *Bayonet Mount #2072–1010–71 is 0.1mm thinner than that of #2072–1010–11.
2. Perform Body Back Adjustment– II (P. 22).

Standard: 44.675 – 44.730

■BB Adjustment Washer

	Parts No.	T=(mm)
A	2092–1014–01	0.05
B	2092–1015–05	0.08
C	2092–1016–05	0.1
D	2092–1017–04	0.12
E	2092–1018–05	0.15
F	2092–1019–05	0.2

■Fig. 1

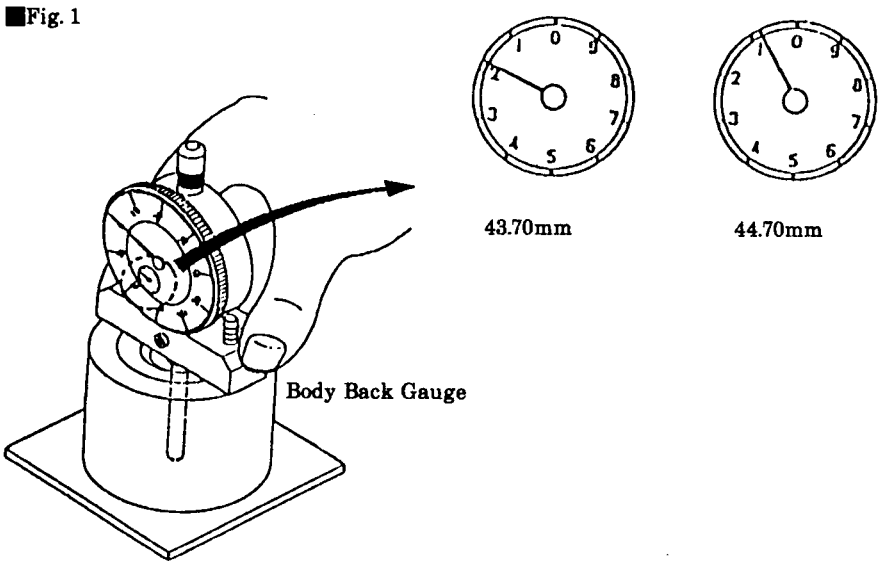

■Fig. 2

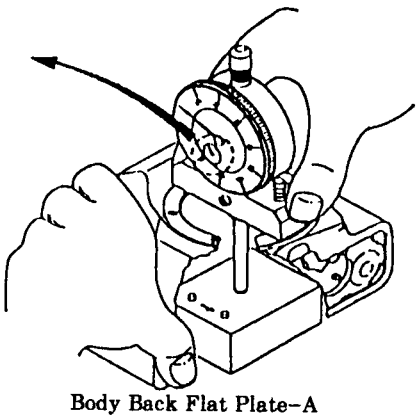

■Body Back Adjustment– II

※Body Back Adjustment– I (P. 21) should be completed before starting.

■Equipments required
: HIT Controller
: 2092 ROM PACK
: HIT Contact Jig–C
: HIT I/F BOX

■Adjustment
1. Set the equipments as in Fig. 1
2. Select "AF ADJ."in the main menu with Control Pad, and press SELECT Button.
3. Select "B.B. ADJ." in AF adjustment menu, and press the SELECT Button.
4. Press Shutter–Release Button partway down.
   ※Previous Body–back value before adjustment (P. 21) is displayed.
5. Select the number (body–back value) using Control Pad. And press upper/lower Control Pad to set the body–back value adjusted in Body Back adjustment– I (P. 21).
   ※The number changes in 0.002–stop increments by each press of the Control Pad.
6. Press SELECT Button.
7. Press Shutter Release Button partway down. "COMPLETE" appears.
8. Press SELECT Button so the displays are replaced with the AF adjustment menu.

■Fig. 1

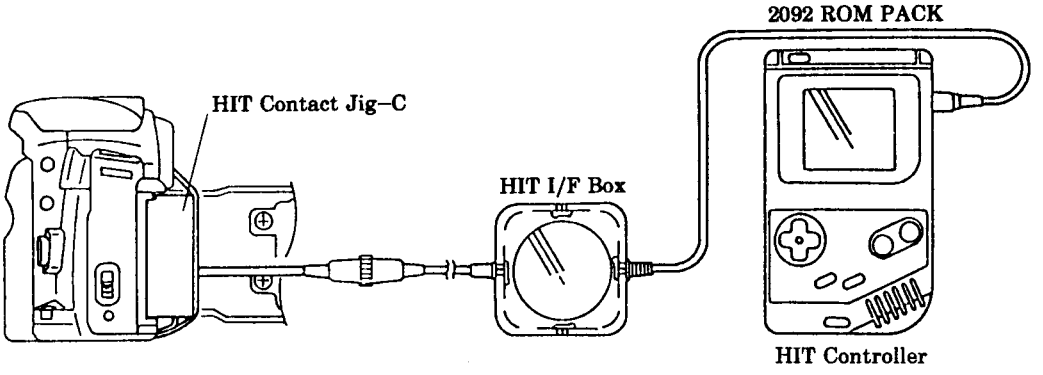

■Viewfinder Back Adjustment

■Equipments required
: 1000mm Collimator
: Master Lens
: Hexagon Bar Wrench (ϕ1.5)

■Check
1. Set the camera so that the chart aligns at the center of Viewfinder, then set Master Lens' Focus Ring to infinity position. (Fig. 1)
2. Check that the chart is in focus.
※If not, adjust mirror position as follows.

■Adjustment
3. Remove the lens from the camera.
4. Holding the mirror up with a finger, move VB Adjuster with Hexagon Bar Wrench up and down so that the chart is in focus.
5. Release the shutter several times, then turn the lens' Focus Ring until it stops at infinity, and check that the chart is in focus.

■Fig. 1

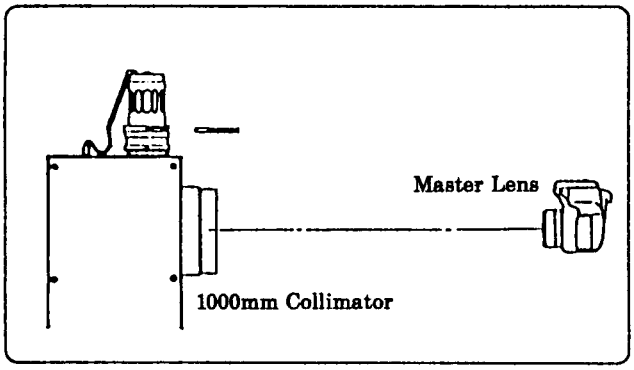

■Fig. 2

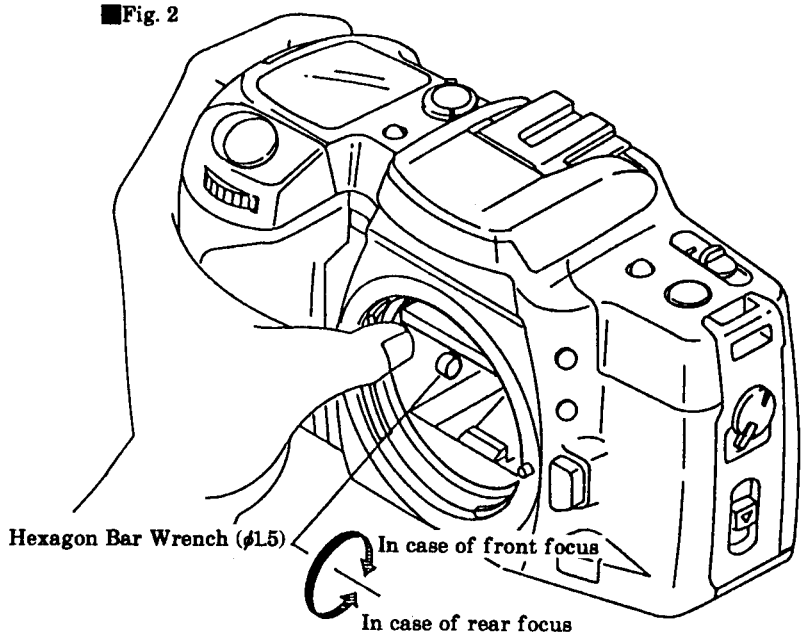

■Hold the mirror up with a finger as shown to adjust viewfinder back.

■Manual SS & X–Sync. Time–Lag Check

■Equipments required

: Shutter Tester
: Body Signal Adapter (with X–contact)
: X–Cable
: AEF Signal Adapter Ⅳ

■Manual SS Check

1. Set the equipments as in Fig. 1.
2. Check that the reading is within the tolerance in Table–1.

■X–sync. Time–Lag Check

1. Set the camera to Shutter Tester as in Fig. 2.
2. Check that X–sync. time lag is within the standard in Table–2.

■Fig. 1

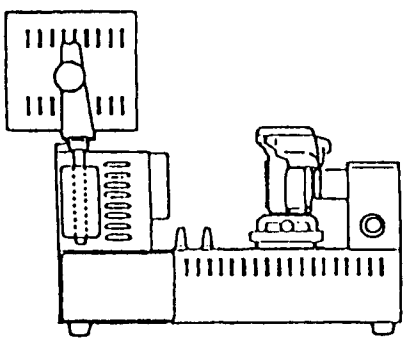

■Fig. 2

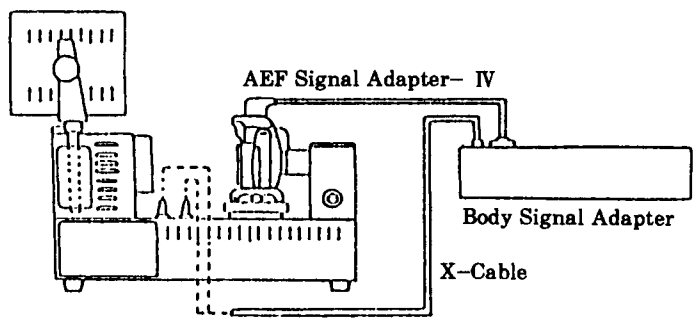

Table–1

SS	Reference value at range–B (ms)	Tolerance at range–B (ms)	Exposure unevenness
1/2000	0.488	0.311 to 0.766	Difference between max. and min. of range–A, –B, –C should be 0.6EV or smaller
1/1000	0.977	0.667 to 1.430	
1/125	7.81	6.34 to 9.62	
1/2	500	467 to 536	

Table–2

SS	Measured item	Standard (ms)
1/90	X–contact delay time	0.4 to 0.9
	From X–contact on to 2nd curtain appearance	2.4 or more

■AE Level Check

■Equipments required
: Luminance Source
: EE Tester
: Master Lens

■Check
1. Set the camera and equipments as in Fig. 1.
2. According to the table below, measure each exposure value with the designated camera setting.
3. Check that all exposure values are within the standard range.
※For Luminance Source MODEL L–222 or L–223, apply figures in the brackets ( ).

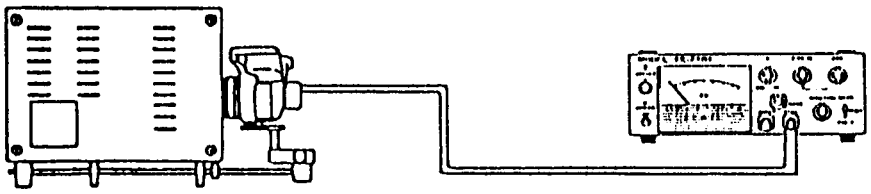

Luminance Source:
K value: 1.3
Luminance: Set as in Table.
Camera:
ISO: 100
Exposure mode: Set as in Table.
Focus mode: M
Master Lens:
Focus Ring: ∞
EE Tester:
K value: 1.3
ASA: 100

Order	Luminance	Exposure mode	Shutter speed	Aperture	Tolerance
1	EV6 (EV5)	A	----	F5.6 (F8)	0±1.0EV
2	EV10 (EV11)				
3	EV15 (EV15)				
4	EV6 (EV5)	P	----	----	
5	EV10 (EV11)				
6	EV15 (EV15)				
7	EV10 (EV11)	S	1/125	----	
8			1/30		

■Aperture Control Check

■Equipments required
: Luminance Source
: EE Tester
: Master Lens

■Check
1. Set the camera and equipments as in Fig. 1.
2. Release the shutter to check the pointer of EE Tester indicates 0±0.3EV.
※Reading may be above/below this range depending on the lens' aperture tolerance.

Standard: 0±0.3EV

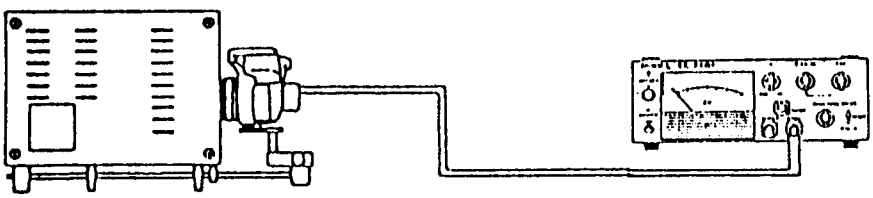

Luminance Source:
K value: 1.3
Luminance: EV 11
Camera:
Exposure mode: M
Aperture: f/5.6
Shutter speed: Bulb
Focus mode: M
Master Lens:
Focus Ring: ∞
EE tester:
K value: 1.3
F value: 5.6
ASA: F
MEAS/CALF: CALF

■Flash Level Check

■Equipments required

: Strobe Tester
: Master Lens
: xi–series PROGRAM/MAXXUM FLASH
: Reflection Paper
: Film (Kodacolor GOLD100; exposed in a room for more than one day)

■Check

※Perform this check in a dark room.

1. Set the camera and equipments as in Fig. 1.
2. Turn the flash on and confirm Flash–Ready Signal glowing.
3. Hold Strobe Tester beside the camera (Fig. 1). And looking through the viewfinder of Strobe Tester, align eye point in the viewfinder to the center of Reflection Paper.
4. Press Strobe Tester's measuring button to set the tester to the stand by condition ("NON.C" blinks.), then release the shutter.
5. Check that the reading of Strobe Tester is within standard range (F5.6±0.5EV).

Standard: F5.6±0.5EV

■Fig. 1

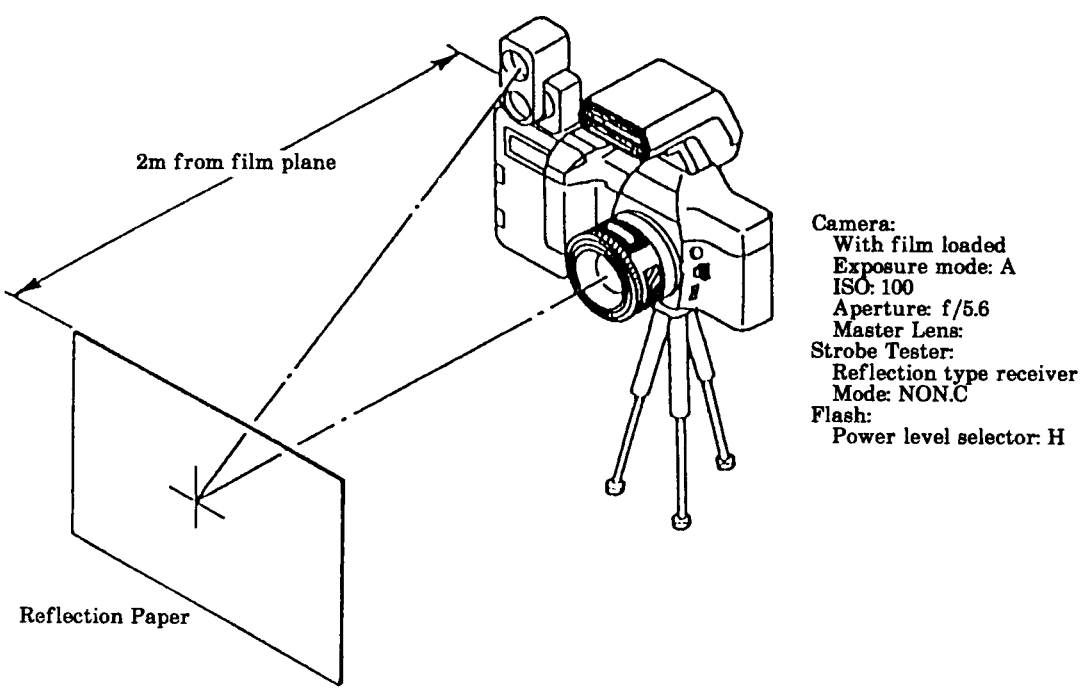

■Level and align center of Reflection Paper and optical axis of lens.

■Manual Set SS Adjustment

※Perform this adjustment before Aperture Preset Adjustment (P. 28).

■Equipments required
: Shutter Tester
: HIT Controller
: 2092 ROM PACK
: HIT Contact Jig–C
: HIT I/F Box

■Check
1. Set the camera to Shutter Tester. (Fig. 1)
   ※The camera's SPC–2 Holder may be in the way of Shutter Tester's light receptor.
   Set the camera off center so that the light receptor is not obstructed by the SPC–2 Holder.
2. Set shutter speed to 1/2000 sec. and release the shutter several times. Calculate center value of the range–B.
   ※If the center value is out of standard, perform adjustment as follows.

■Adjustment
3. Set the equipments as in Fig. 2.
4. Select "SS ADJ." in the main menu with Control Pad, then press SELECT Button.
5. Select "536" using Control Pad.
6. Set the center value (μS) obtained at procedure 2 using Control Pad and Button A or B, then press SELECT Button.
   • Setting in 8μS–stop: Press upper/lower Control Pad while pressing and holding Button A.
   • Setting in 104μS–stop: Press upper/lower Control Pad while pressing and holding Button B.
7. Press Shutter Release Button partway down. "COMPLETE" appears.
8. Press SELECT Button. Displays are replaced with the main menu.

■Fig. 1

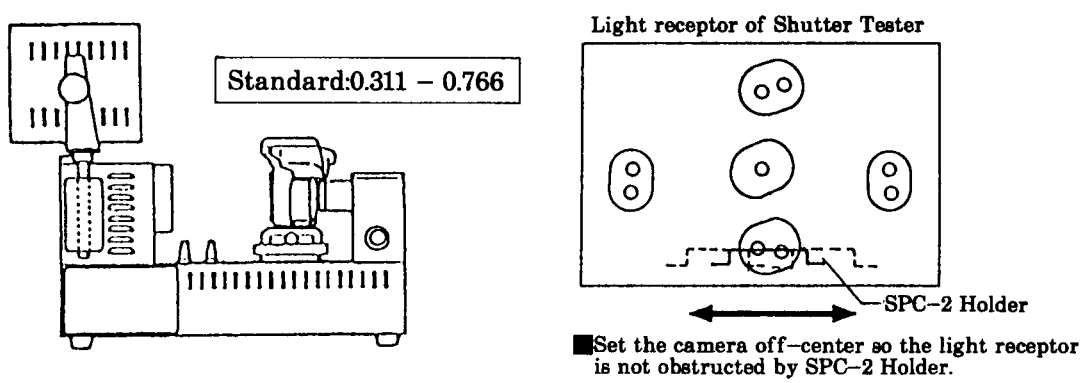

■Set the camera off–center so the light receptor is not obstructed by SPC–2 Holder.

■Fig. 2

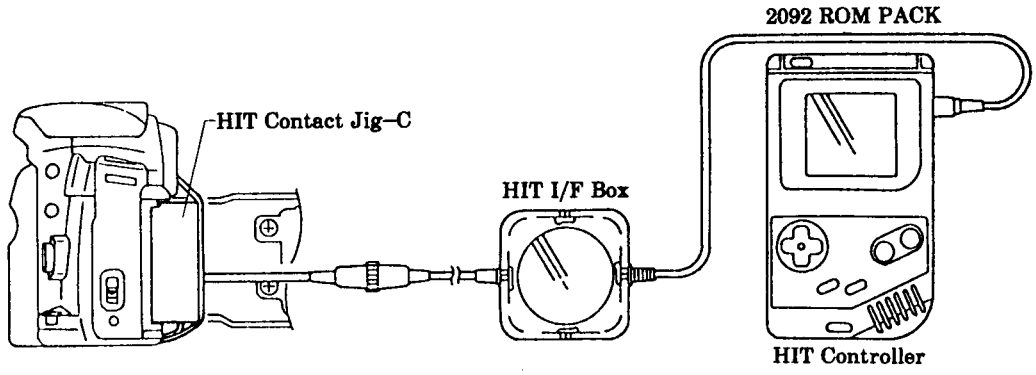

■Aperture Preset Adjustment

※Manual set SS adjustment (P. 27) should have been completed.
Built–in flash should be down.

■Equipments required

: Luminance Source
: EE Tester
: Master Lens
: HIT Controller
: 2092 ROM PACK
: HIT Contact jig–C
: HIT I/F BOX

■Adjustment

1. Set the equipments as in Fig. 1.
2. Select "PRETRIGGER ADJ." in the main menu with Control Pad, and press SELECT Button.
3. Check that the built–in flash is down, and set Luminance Source to EV10, then press SELECT Button to enter.
4. Press Shutter–Release Button partway down. Shutter speed and aperture displays appear in both camera's and HIT controller's LCD. Check that they are the same.
5. Release the shutter and see whether the value in EE Tester is more or less than –0.35EV.
   - –0.35EV or more: Select "–0.35EV OR OVER", then press SELECT Button.
   - Less than –0.35EV: Select "UNDER –0.35EV", then press SELECT Button.
6. Release the shutter. Check that value in EE tester is changed by 0.5EV from the value obtained at procedure–5. If so, select "YES", and press SELECT Button. Displays are replaced with next measuring point.
   ※If the value is not changed by 0.5EV, select "NO", and press SELECT Button.
   Then repeat procedure–6 until you can select "YES".
7. Repeat procedure 4, 5, and 6 for four of the measuring points. (Fig. 2)
8. "COMPLETE" appears when adjustment is completed.
9. Press SELECT Button. Displays are replaced with the main menu.

■Fig. 1

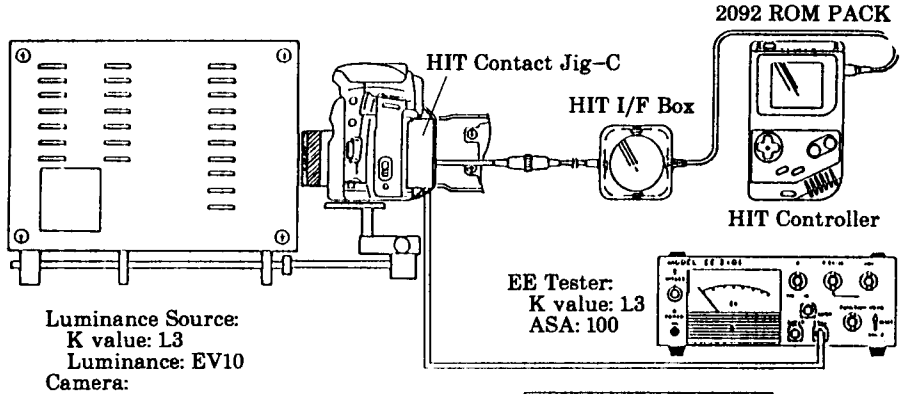

■Fig. 2

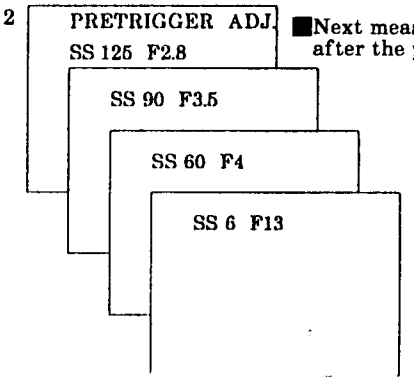

■Next measuring point appears after the procedure–6.

■AE Adjustment

■Equipments required
: Luminance Source
: Master Lens
: HIT Controller
: 2092 ROM PACK
: HIT Contact Jig–C
: HIT I/F BOX

■Adjustment
1. Set the equipments as in Fig. 1
2. Select "AE ADJ." in main menu using Control Pad, and press SELECT Button.
3. Select "AE ADJ." in AE adjustment menu using Control Pad, and press SELECT Button.
4. Set Luminance Source to EV6, and press SELECT Button.
   ※Panorama model (–600) should be set to normal frame.
5. Press Shutter–Release Button partway down.
6. Set Luminance Source to EV15, and press SELECT Button.
7. Press Shutter–Release Button partway down.
8. Select panorama or normal model as follows.
   ※For –600 model:
   ①Select "PANORAMA MODEL", and press SELECT Button.
   ②Set Luminance Source to EV15, press SELECT Button.
   ③Set the camera to panorama frame.
   ④Press Shutter–Release Button partway down.
   "COMPLETE" appears when adjustment is completed.
   ※For other models
   ①Select "NORMAL MODEL", and press SELECT Button.
   "COMPLETE" appears when adjustment is completed.
9. Press SELECT Button. Displays are replaced with the AE adjustment menu.

■Check
10. Select "AE CHECK" in the AE adjustment menu with Control Pad, and press SELECT Button.
11. Set Luminance Source to EV10.
12. Press Shutter–Release Button partway down. Displays as Fig. 2 appears.
13. Check that value in each cell is within ±0.3 EV to the Luminance Source setting. (Fig. 2)
    ※Also check with EV6 and EV15.
14. Press SELECT Button. Displays are replaced with the AE adjustment menu.

■Fig. 1

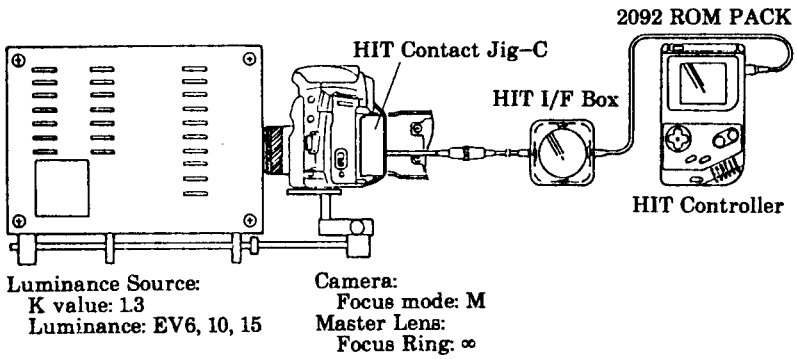

■Fig. 2

Example: EV10

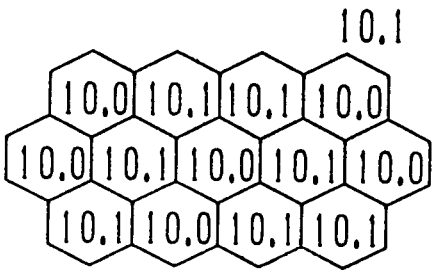

■Flash Level Adjustment

■Equipments required
: Luminance Source
: Master Lens
: HIT Controller
: HIT Contact Jig–C
: HIT I/F BOX
: 2092 ROM PACK
: Reflection Paper

■Adjustment
1. Set the equipments as in Fig. 1.
2. Select "FLASH LEVEL ADJ." in main menu with Control Pad, press SELECT Button.
3. Select "FLASH LEVEL ADJ." in flash level adjustment menu with Control Pad, press SELECT Button.
4. Set Luminance Source to EV10. And press SELECT Button.
5. Press and hold Shutter–Release Button partway down until "COMPLETE" appears. Shutter is automatically released five times before the "COMPLETE" appears.
6. Press SELECT Button. Displays are replaced with the flash level adjustment menu.

■Check
7. Select "FLASH LEVEL CHECK" in the flash level adjustment menu using Control Pad, and press SELECT Button.
8. Set Luminance Source to EV10. Press SELECT Button.
9. Press and hold Shutter–Release Button partway down until "COMPLETE" appears. Shutter is automatically released three times before the "COMPLETE" appears.
※Check that the reading at either of ISO 50, 100 and 400 is within ±0.4EV. (Fig. 2)
10. Press SELECT Button. Displays are replaced with the flash adjustment menu.

■Fig. 1

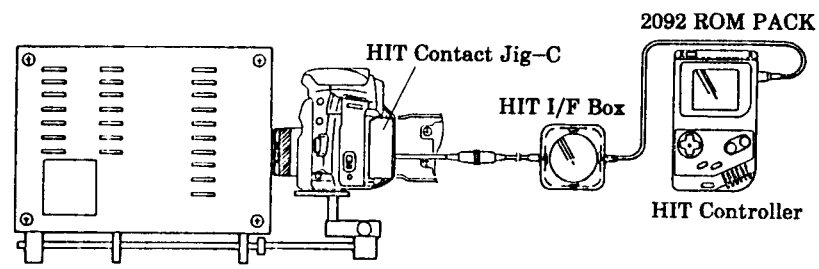

Luminance:
K value: L3
Luminance: EV10
Camera:
Focus mode: M
Master Lens:
Focus Ring: ∞

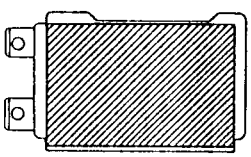

■Attach a Reflection Paper to a Pressure Plate to be discarded.
And hold them at the camera back on film plane.

■Fig. 2

FLASH LEVEL CHECK	
COMPLETE	
50	–0.18EV
100	–0.18EV
400	–0.18EV
MENU	

■Pre–Flash Level Adjustment

■Equipments required

: Strobe Tester
: Guide No. Adjusting Jig
: HIT Controller
: HIT Contact Jig–C
: HIT I/F Box
: 2092 ROM PACK

■Check

1. Set the equipments as in Fig. 1.
2. Select "FLASH LEVEL ADJ." in the main menu using Control Pad, and press SELECT Button.
3. Select "PREFIRE ADJ." in flash level adjustment menu using Control Pad, and press SELECT Button.
4. Press Shutter–Release Button partway down.
5. Select "FIRE" with Control Pad, and press SELECT Button.
6. Press Shutter–Release Button partway down so built–in flash fires.
   Check that reading in Strobe Tester is within standard range.
   ※If not, perform adjustment as follows.

■Adjustment

7. Press Control Pad at the right or left to adjust flash output.
   • To increase flash output: Press the right of Control Pad.
   • To decrease flash output: Press the left of Control Pad.
8. Repeat procedure 5, 6, and 7 until the reading meets the standard.
9. Select "MENU" with Control Pad and press SELECT Button. Displays are replaced with the flash level adjustment menu.

Standard range: F0.8+0.2 to F11+0.2

■Fig. 1

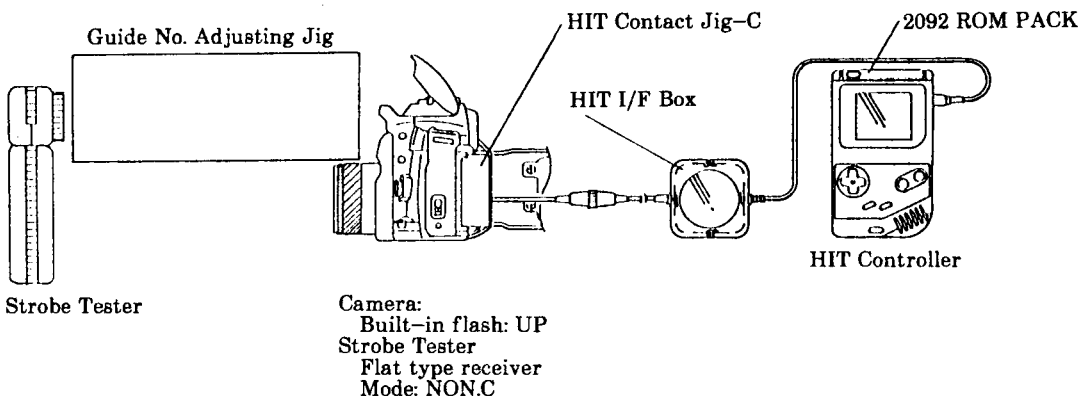

■Wireless Flash Level Adjustment

■Equipments required

: Strobe Tester
: Guide No. Adjusting Jig
: HIT Controller
: HIT Contact Jig–C
: HIT I/F BOX
: 2092 ROM PACK

■Check

1. Set the equipments as in Fig. 1.
2. Select "FLASH LEVEL ADJ." in main menu using Control Pad, and press SELECT Button.
3. Select "W–LESSFIRE ADJ." in flash level adjustment menu using Control Pad, and press SELECT Button.
4. Press Shutter Release Button partway down.
5. Select "FIRE" with Control Pad, and press SELECT Button.
6. Press Shutter–Release Button partway down so that the built–in flash fires. Check that reading in Strobe Tester is within standard range.
   ※If not, perform adjustment as follows.

■Adjustment

7. Press the right or left of Control Pad to adjust flash output.
   • To increase flash output: Press the right of Control Pad.
   • To decrease flash output: Press the left of Control Pad.
8. Repeat procedure 5, 6, and 7 until the reading meets the standard.
9. Select "MENU" with Control Pad, and press SELECT Button. Displays are replaced with the flash level adjustment menu.

Standard F2.8 to F4

■Fig. 1

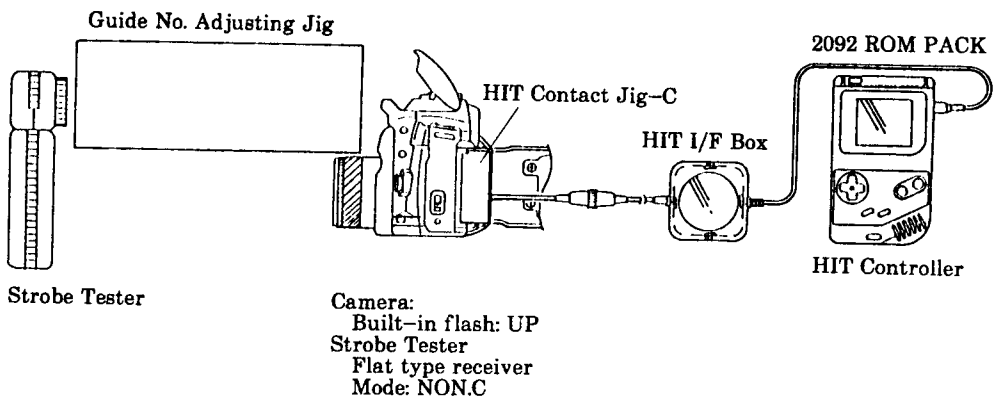

■B. C. Lock Voltage Adjustment

■Equipments required

: DC Power Supply
: Digital Multimeter
: 2CR5 Type Power Supply Adapter for B.C. Adjustment
: HIT Controller
: HIT Contact Jig–C
: HIT I/F BOX
: 2092 ROM PACK

■Adjustment

1. Set the equipments as in Fig. 1.
2. Select "BC–LOCK ADJ."in main menu using Control Pad, and press SELECT Button.
3. Press SELECT Button, then Shutter–Release Button partway down.
4. Set DC Power Supply to 5.05V, and press SELECT Button.
5. Press Shutter–Release Button partway down twice. "COMPLETE" appears.
6. Select "MENU" with Control Pad, and press SELECT Button. Displays are replaced with main menu.

■Check

7. Check that B.C. lock operates at the standard voltage as below.

Standard voltage: 4.75V

■Fig. 1

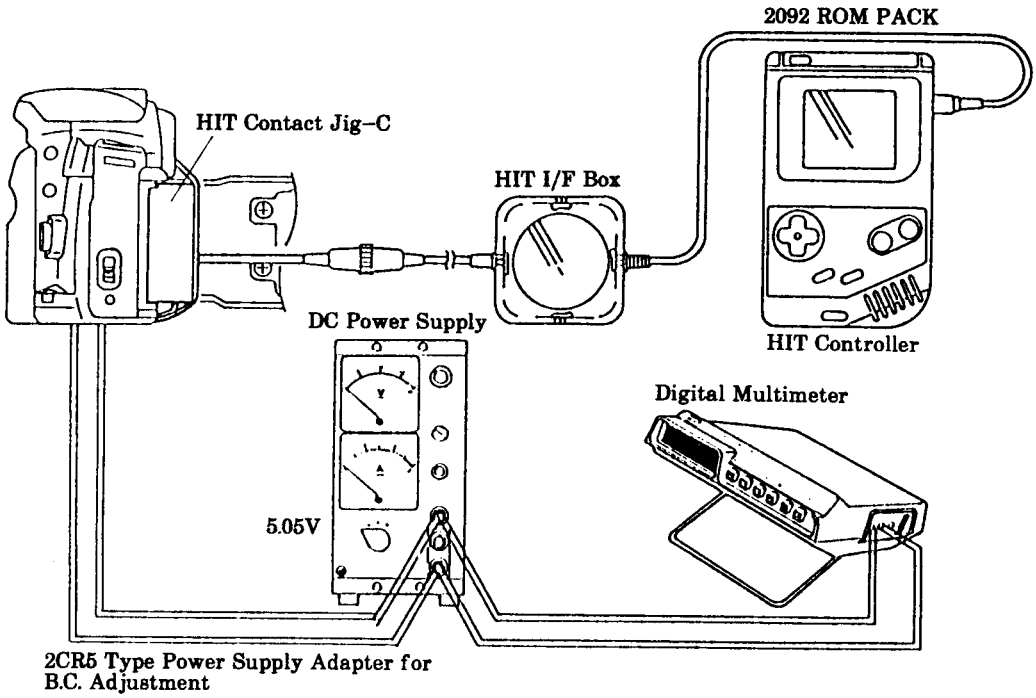

■LCD Displays Check

■Equipments required
: HIT Controller
: HIT Contact Jig–C
: HIT I/F BOX
: 2092 ROM PACK

■Check
1. Set the equipments as in Fig. 1.
2. Select "LCD CHECKING" in main menu using Control Pad, and press SELECT Button.
3. Press Shutter–Release Button partway down. All displays appear in Body Data Panel.
4. "COMPLETE" appears in LCD of HIT Controller.
5. Press SELECT Button so that displays are replaced with the main menu.

■Fig. 1

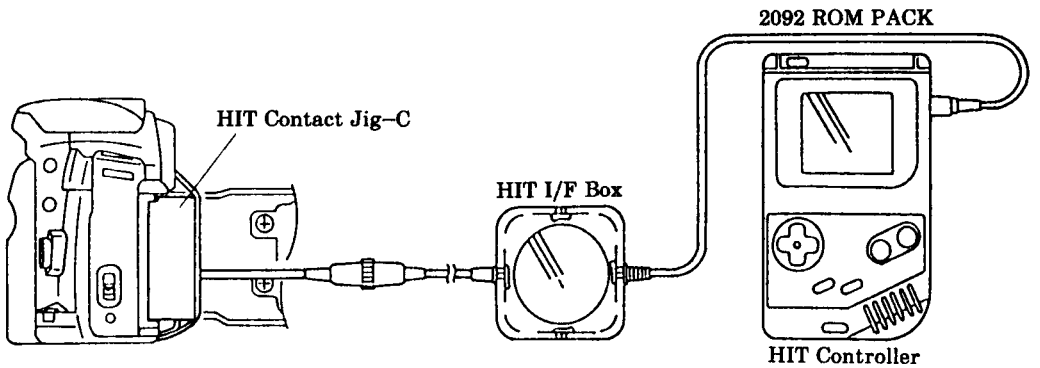

■Preparation Before Adjustment–2 (AF adjustment)

※Always perform adjustment ① to ③ (P. 36 – 38) when you replace FPC–A, FPC–B, or parts attached to Mirror Box as well as when you receive complaints about poor focusing.

■Items to be confirmed before AF adjustment

※Check the following before starting AF adjustments.

1. Body Back and Viewfinder Back are correctly adjusted.
2. All external parts except for Bottom Cover are installed.
3. If CCD sensor module is out of position after replacing FPC–B, tighten three AF adjusting screws #2089–5051 until they stop, then evenly lcosen them by 1.14 turns (0.4mm).

■Equipments required

※See "Tools & Instruments (P. 40) for model and jig numbers.

: 1000mm Collimator
: AF Master Lens
: AF Chart– Ⅶ for 2085
(See P. 29 of 2085 Service Manual.)
: AF Chart Ⅷ
: HIT Controller
: 2092 ROM PACK
: HIT Contact Jig–C
: HIT I/F BOX
: AF–Y.P Adjuster
: AF Tripod Attachment Ⅱ
: Grip Ring
: Hexagon Bar Wrench (ϕ1.5) or Hexagon Screwdriver
: Flood Lamp
(having color temperature of about 2800°K)

■Fig. 1

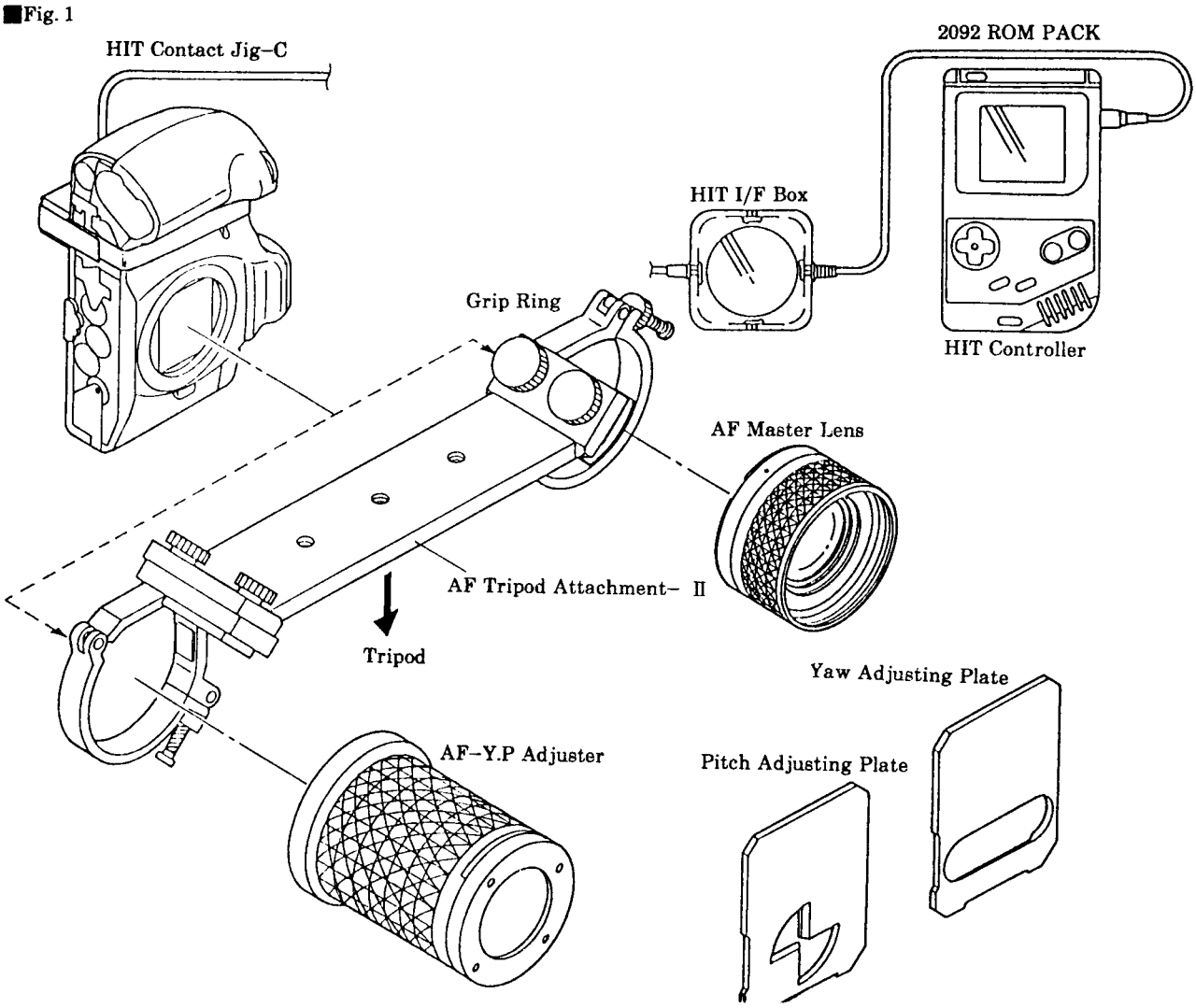

①AF Area Adjustment

■Check

1. Set up HIT system, and set camera and AF chart Ⅷ as in Fig. 1.
2. Select "AF ADJ." in main menu using Control Pad, and press SELECT Button.
3. Select "AREA ADJ." in AF adjustment menu using Control Pad, and press SELECT Button.
4. Press Shutter–Release Button partway down so wavy lines and value appear in display of HIT Controller. Check that the wavy lines are like the one in Fig. 2 and the value is within standard below. (Fig. 2)

※If not, perform adjustment as follows.

■Adjustment

5. Press SELECT Button. Displays are replaced with AF adjustment menu.
6. Set the camera's shutter speed to bulb, then adjust Sub Mirror position using Hexagon Bar Wrench (1.5) as in Fig. 3.

   ※Shutter cannot be released with the displays as Fig. 2.
7. Repeat procedure 3, 4, and 5 until the value is within the standard.
8. Press SELECT Button. Displays are replaced with the AF adjustment menu.

■Fig. 1

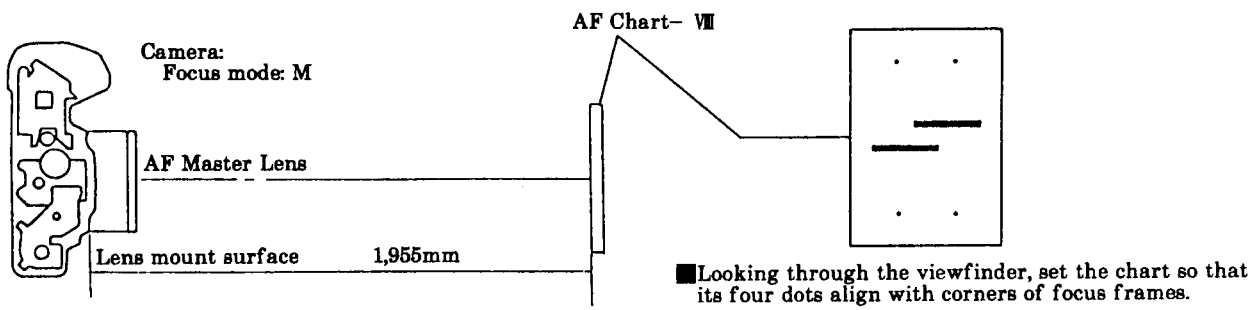

■Fig. 2

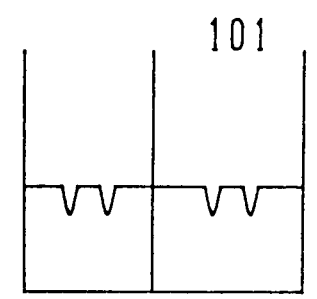

Standard: 100±4

■Fig. 3

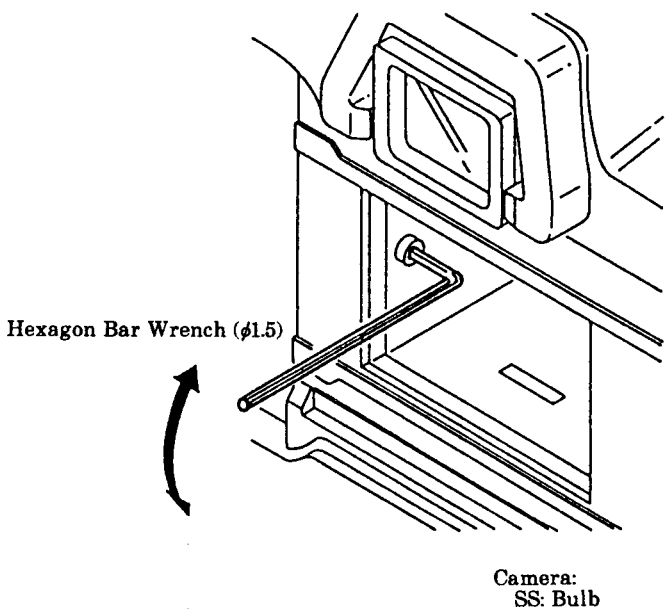

②Pitch, Yaw Adjustment

※Light up the camera with a flood lamp during Pitch, Yaw adjustment.

■Pitch adjustment

1. Insert Pitch Adjusting Plate to Y.P Adjuster. (Fig. 1)
2. Select "AF ADJ." in main menu using Control Pad, and press SELECT Button.
3. Select "PITCH,YAW ADJ." in AF Adjustment menu with Control Pad, and press SELECT Button.
4. Press Shutter–Release Button partway down.
5. Turn Pitch Adjusting Screw as in Fig. 4 so that the value in the HIT controller display is within standard range (0090–0110).

Standard: 0090 – 0110

■Yaw adjustment

6. Insert Yaw Adjusting Plate to Y.P Adjuster. (Fig. 3)
7. Turn Yaw Adjusting Screw as in Fig. 4 so that the value in the HIT Controller display is within standard range (0083–0110).
8. Press SELECT Button. The displays are replaced with AF adjustment menu.

Standard: 0083 – 0110

■Check

9. Check AF area referring to page 36. If required, perform "① AF area adjustment" and "② Pitch, Yaw adjustment" repeatedly until all readings meet standards.

■Fig. 1

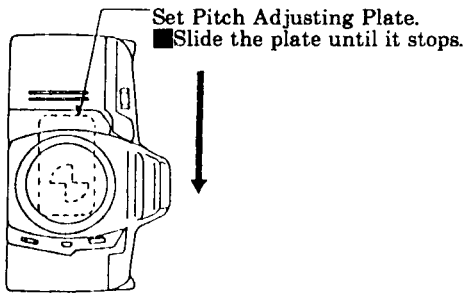

■Fig. 2

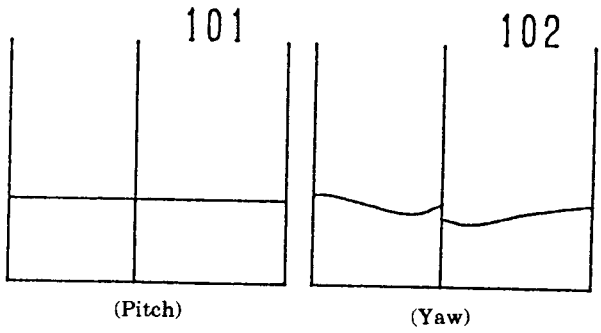

■Fig. 3

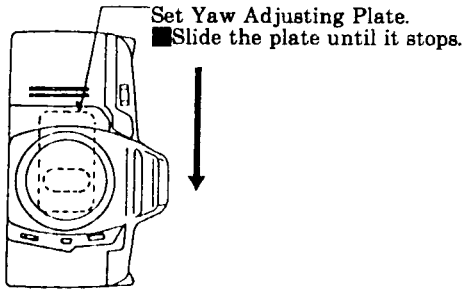

■Fig. 4

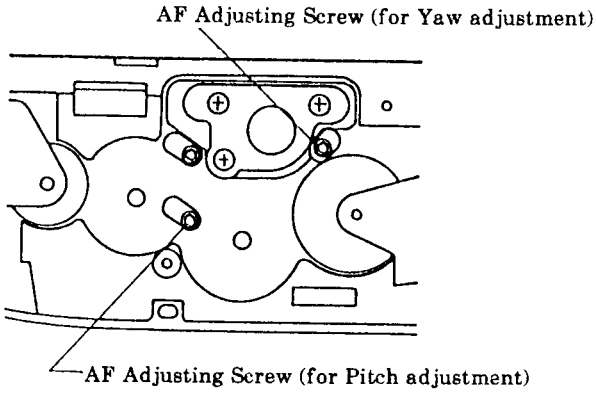

③EZ Adjustment

■Adjustment

1. Set up the HIT system, and set camera and AF chart– Ⅶ as in Fig. 1.
2. Select "AF ADJ." in main menu using Control Pad, and press SELECT Button.
3. Select "EZ ADJ." in AF adjustment menu using Control Pad, and press SELECT Button.
4. Looking through viewfinder, align the indicated point (※) of focus frame (Fig. 2) with measuring point I. Then press SELECT Button.
5. Press and hold Shutter–Release Button partway down until the next measuring point appears in the display.
6. Repeat procedure 4 and 5 for each measuring point of I to L. "COMPLETE" appears when all measuring points are adjusted.
7. Press SELECT Button. Displays are replaced with the AF adjustment menu.

■Check

8. Select "EZ CHECK" in the AF adjustment menu using Control Pad, and press SELECT Button.
9. Looking through viewfinder, align the indicated point (※) of Focus Frame (Fig. 2) with measuring point K. Then press SELECT Button.
10. Press Shutter–Release Button partway down. And check that the displayed value is within standard range (±30) (Fig. 3).
11. Press SELECT Button. Displays are replaced with the AF adjustment menu.

Standard: ±30

■Fig. 1

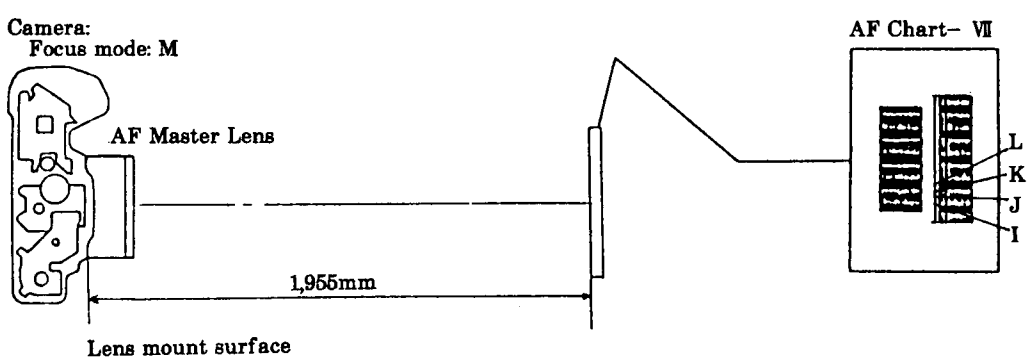

■Fig. 2

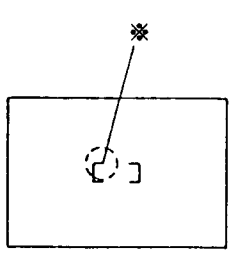

■Fig. 3

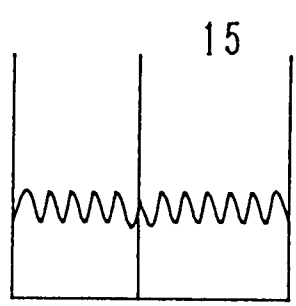

■Error Code on HIT Controller

■Error code list

Item	Error code	Meaning	Cause
B. C. lock voltage adjustment	10	Incorrect A/D conversion value at battery check	• Voltage is wrongly set. • Wrong resistance of Power Supply Adapter • Defective resistor or transistor for B. C. dummy current
AE adjustment	20	Picture frame (panorama/ normal) is wrongly set.	• Picture frame is wrongly set. • Defective SPANO
	21	Little difference between EV6 and EV15	• Luminance Source is wrongly set. • SPC disconnected.
Flash level adjustment	30	Incorrect flash level	• Luminance Source is wrongly set. • SPC disconnected. • Reflection Paper isn't set. • Aperture operation failure
Pre–flash level adjustment	40	SFLD doesn't turn ON.	• Flash remains down. • SFLD disconnected
Wireless flash level adjustment			
Aperture preset adjustment	50	Aperture preset is out of standard.	• Defective Aperture Base Assy
EZ adjustment	61	Low contrast	• Chart is out of position. • Chart is too close/far. • Defective CCD

■Tools & Instruments

■Luminance Source
<MODEL L-2101, L-2111, *L-222, *L-223>
■EE Tester <MODEL EE-2101, EE-2111>
■Shutter Tester <MODEL S-2201, S-2101>
■1000mm Collimator <MODEL RC- Ⅲ ,* Ⅱ ,* Ⅰ >
■Digital Multimeter <MODEL 2506A, 2508>
■DC Power Supply <*524B, *524C, MTR18-2>
■Strobe Tester <MODEL ST- Ⅴ ,* Ⅳ ,* Ⅲ >
■xi-series PROGRAM/MAXXUM FLASH
■Master Lens <2072-0001-75>
■AF Master Lens <2072-0006-75>
■HIT Controller <7981-5001-01>
■ROM PACK for 2092 <7981-5001-56>
■Contact Jig-C for HIT <7981-5001-13>
■I/F Box for HIT <7981-5001-32>
■AF Chart- Ⅷ <2085-0001-75>
■AF Chart- Ⅶ for 2085 <2082-0003-75>
※Modified or 2085 (See P. 29, 2085 Service Manual.)
■Body Signal Adapter (With X-contact)
■AEF Signal Adapter <7981-2014-34>
■X-Cable <7981-2014-16>
■Guide No. Adjusting Jig <2082-0005-75>
■Motor Axis Spanner <2078-0421-75>
■2CR5 Type Power Supply Adapter
<7981-1018-51>
■2CR5 Type Power Supply Adapter for
B. C. Adjustment <7981-2203-02>
■AF Tripod Attachment Ⅱ <2072-0003-76>
■AF-Y.P Adjuster <2076-0006-75>
■Grip Ring <7983-9004-01>
■Mirror Remover <2071-5806-75>
■Mirror Positioner <2072-5151-75>
■Body Back Flat Plate-A <7982-2004-01>
■Body Back Gauge <7982-2002-01>
■Dial Gauge <7982-2001-11>
■Hexagon Bar Wrench (ϕ1.5)
■Hexagon Screwdriver <7983-1040-01>
■Reflection Paper <7981-3001-51>
■Flood Lamp
(having color temperature of 2800°K.)
■Film (Kodacolor GOLD 100, exposed in a room
for more than one day)
(*Production ceased)

■Subsidiary materials

■Grease
: G-75 <7984-1075-01>
: G-85 <7984-1085-01>

■Adhesive
: B-10 <7984-2010-01>
: B-50 <7984-2050-01>
: B-60 <7984-2060-01>

CHECK LIST

1. This CHECK LIST describes the quality of operation warranted to general users.
   When users inquire about quality or request inspection, refer to this CHECK LIST.
   Use this list also when checking operation after repair.
2. When using this list during shipping or receiving inspection, judge the quality according to purpose of the inspection, not by directly referring to this level.
3. For individual taste or special usage, some users may not be satisfied with this level of quality and will request a different one.
   In such cases, adjust the level as requested by them as much as possible.
4. Checking items which are characterized as sensory test are not included.
   Adjust these items according to the product itself or user's request.
5. Unless otherwise mentioned, use a standard lens #2550–100 or a master lens #2072–0001–75 for the following check.

Name of parts (Camera Body)

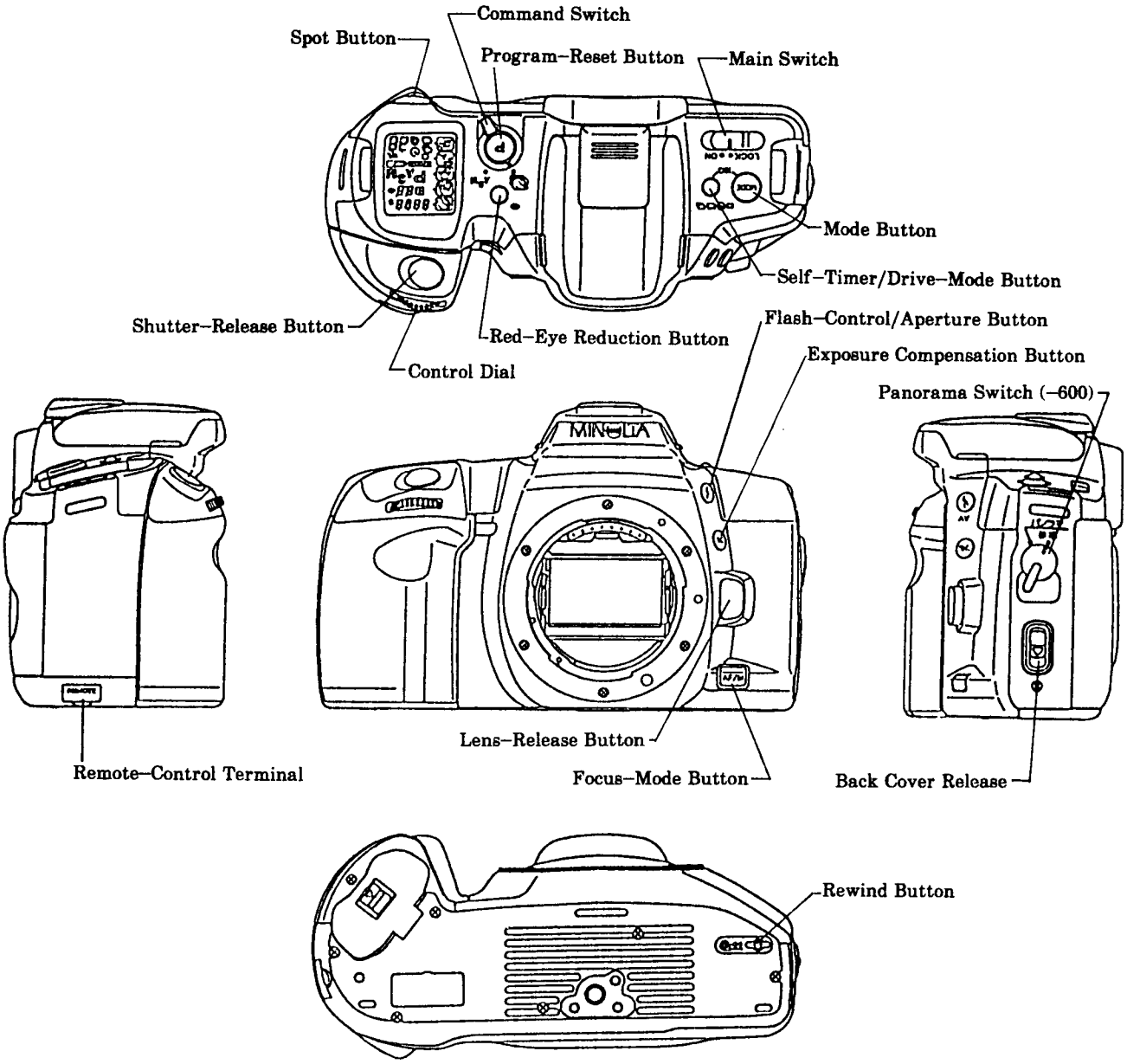

Data Panel and Viewfinder displays

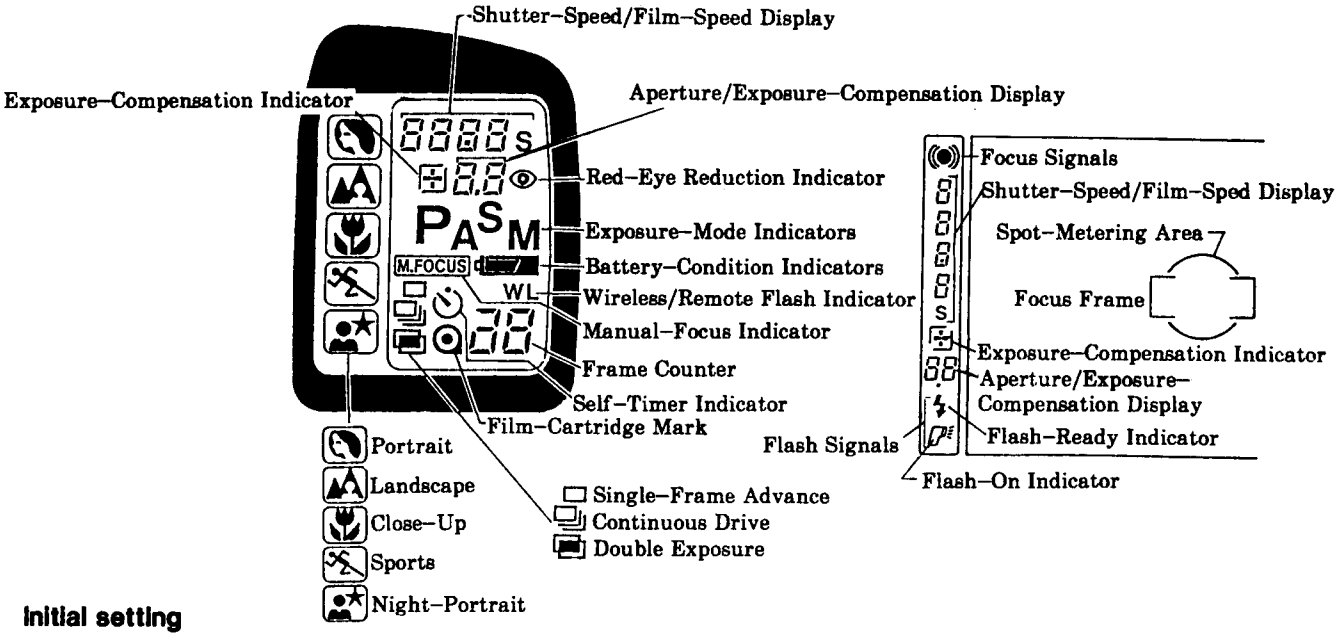

Initial setting

Battery Installation

<Camera>

- By installing a battery, camera is reset as follows.
  - Exposure mode: P
  - Exposure compensation: 0
  - Drive mode: Single frame advance
  - Focus Mode: Autofocus
  - Wireless flash: Cancelled
- Battery-Condition Indicator appears and stays for 4 seconds.
- These settings are not reset.
  - Number of exposed frames
  - Red eye reduction
  - Manually set film speed

<Lens>

- AF lens : Set to a specific focus position after infinity reset.
- xi-lens : Set to a specific focus position after zoom wide-end reset.

Main Switch ON

<Camera>

- By sliding Main Switch to ON, camera is reset as follows.
  - Focus mode: Autofocus
  - Self-timer: Cancelled
  - Wireless flash: Cancelled
- Settings other than above are not reset.
- Battery Condition Indicator appears and stays for 4 seconds.

<Lens>

- AF lens : Set to a specific focus position after infinity reset.
- xi-lens : Set to a specific focus position after zoom wide-end reset.

Main Switch LOCK

<Camera>

- By sliding Main Switch to LOCK, all displays in Data Panel disappear.

<Lens>

- AF lens : Reset to infinity position.
- xi-lens : Reset to its shortest length of lens.

Settings & Displays

Exposure/Subject–Program Mode Indicators

- Pressing and holding Mode Button while turning Control Dial will change displays according to Command Switch position;

  Command Switch at Exposure Mode: $_{A}^{S}{}_{M}$

  P ⟷ A ⟷ S ⟷ M

  Command Switch at Subject Program Mode:

  P ⟷ ⟷ ⟷ ⟷ ⟷

Program reset displays

- Pressing Program Reset Button will reset the settings and displays as follows:
  - Exposure mode: P
  - Exposure compensation: ±0
  - Drive mode: Single–frame advance
  - Focus mode: AF
  - Self–timer: Cancelled
  - Wireless flash: Cancelled

Drive Mode Indicators

- Pressing and holding Self–Timer/Drive–Mode Button while turning Control Dial will change Drive Mode Indicators:

  Single–frame advance ⟷ Continuous drive

  Self–timer ⟷ Double exposure

Red–Eye Reduction Indicator

- By each press of Red–Eye Reduction Button, Red–Eye Reduction Indicator appears/disappears.

Wireless/Remote Flash Indicator

- When a flash unit for wireless flash is attached, by each press of Red–Eye Reduction Button, Wireless Flash Indicator "WL" appears/disappears.

※While the camera and the flash unit are set to the wireless flash mode, detaching the flash unit then pressing the Red–Eye Reduction Button will make a test burst.

※Wireless flash mode is cancelled after Main Switch is OFF.

Manual Focus Indicator

- By each press of Focus Mode Button, Manual Focus Indicator appears and disappears alternately.
  - In manual focus mode: Manual Focus Indicator "M.FOCUS" appears in Data Panel.
  - In autofocus mode: The Manual Focus Indicator disappears and lens is set to a specific focus position after infinity reset or zoom wide–end reset.

Exposure Compensation Indicator

- Pressing Exposure Compensation Button while turning Control Dial changes Exposure Compensation Display within the range as follows:

  ⊟3.0EV to ⊞3.0EV *In 1/2–stop increments

Film Speed Display

- Pressing Mode Button and Self–Timer/Drive–Mode Button simultaneously while turning Control Dial will change Film Speed Display within the range as follows:

  ISO 6 to 6400 *In 1/3–stop increments

Controls and Operations

Exposure mode

(P mode)
- Optimum shutter speed and aperture are automatically set.
- If the required setting is beyond camera's control range, Flash–On Indicator "⚡" and Shutter Speed Display blink in Viewfinder.

(A mode)
- Turning Control Dial selects aperture setting in 1/2–stop increments.
- Optimum shutter speed is automatically set.
- If the required setting is beyond camera's control range, Shutter Speed Displays blink.

(S mode)
- Turning Control Dial selects shutter speed setting in 1/2–stop increments.
- Optimum aperture is automatically set.
- If the required setting is beyond camera's control range, Aperture Displays blink.

(M mode)
- Turning Control Dial selects shutter speed setting.
- Pressing and holding Aperture Button while turning Control Dial selects aperture setting.
- If your setting is over/under exposure, Exposure Compensation Indicator appears accordingly in Viewfinder.

  [+] : Over exposure
  None: Optimum exposure
  [−] : Under exposure

Metering mode

(Spot metering)
- While Spot Button is pressed and held, aperture and shutter speed are locked.
- Only Spot–Metering Area is used for metering.

Flash

Flash control
- When flash is on and charging, Flash–On Indicator "⚡" appears in Viewfinder.
- When flash charge is completed, Flash–Ready Indicator " ⚡ " appears in Viewfinder.
- After a flash burst, Flash–Ready Indicator " ⚡ " blinks in 2Hz in Viewfinder.

Flash recycling time
- Within 2.7 sec. (no pre–flash);
  Reference voltage: 5.8V, 0.6Ω (Using Power Supply Adapter)

■Flash control shutter speed

Exposure mode	Normal flash (sec.)	Wireless flash (sec.)
P	1/90 (1/90 – 2)	1/45 (1/45 – 2)
Portrait		
Landscape		
Close up		
Sports		
Night Portrait	1/90 – 2	1/45 – 2
A	1/90 (1/90 – 2)	1/45 (1/45 – 2)
S		
M	1/90 or slower	1/45 or slower

※Shutter speed in brackets ( ): while Spot Button is pressed down.

Flash mode

(Auto–flash)

■Conditions to make auto flash

Exposure mode	Low light	Back lit
P	○	○
Portrait	○	○
Landscape	○	○
Close up	○	×
Sports	○	×
Night portrait	---	---
A	---	---
S	---	---
M	---	---

※In condition marked " ○ " and when flash is down, Flash–On Indicator " " blinks in Viewfinder.

※When wireless flash is set and built–in flash is down, Flash–On Indicator " " blinks in Viewfinder.

(Fill in flash)

- In A, S, M, or night–portrait mode, or while Flash–Control Button is pressed and held, flash always fires.

Focusing

(Autofocus)

- By pressing Shutter–Release Button partway down, one of the Focus Signals appear in Viewfinder.
  - light: Focus is confirmed. (continuous AF)
  - light: Focus cannot be confirmed.
  - blink: Focus cannot be confirmed. (low–contrast)
  - light: Focus and exposure are locked.
- AF illuminator operates (built–in flash bursts) in low light.

(Manual focus)

- By pressing Shutter–Release Button partway down, one of the Focus Signals appear in Viewfinder.
  - light: Focus is confirmed.
  - None: Focus cannot be confirmed.
  - blink: Focus cannot be confirmed. (low–contrast)
- AF illuminator doesn't operate (built–in flash doesn't burst).

Film Transport

Initial load

- When initial load is completed, " 1 " appears in Data Panel.
- When initial load is failed, " " appears blinking in Data Panel.

Rewind

- Film rewind automatically starts at the end of the roll.
- Pressing Rewind Button starts mid–roll rewind.
- During rewind, number in Frame Counter decreases accordingly.
- When film rewind is completed, " " appears in Frame Counter and " " blinks.
- Film tip is completely rolled into film cartridge.

Rewind time

- Approx. 24sec.; Film: Kodak Gold 100, 24exp., Reference voltage: 5.8V (using Power Supply Adapter).

Drive mode

(Single–frame advance)
- While Shutter–Release Button is pressed and held, shutter runs only for one time.
- In AF mode, shutter runs only after focus is confirmed.

(Continuous–drive)
- While pressing and holding Shutter–Release Button, shutter runs continuously up to 1 frame per second.
- In AF mode, shutter runs continuously each time after focus is confirmed, and on second shot and after, focus mode becomes continuous AF.

(Double exposure)
- Film doesn't advance until the second shot is taken.
- Pressing Program–Reset Button or removing and setting the battery cancels the setting.

(Self–timer)
- During countdown, Self–Timer Indicator and Self–Timer Lamp blink in 2Hz.
- Shutter is released 10 sec. after the self–timer starts operating.
- Focus is locked during countdown.

Customized Functions

AF illuminator on/off
- By sliding Main Switch from LOCK to ON while pressing Red–Eye Reduction Button, on or off appears in Data Panel.
  on AL: AF illuminator is on.
  oFF AL: AF illuminator is off.

Service function–1 (F–– shutter lock on/off)
- By sliding Main Switch from LOCK to ON while pressing and holding Spot and Drive–Mode Buttons, on or off appears in Data Panel.
  on: Shutter is locked when film is loaded and no lens is attached.
  oFF: Shutter can be released when film is loaded and no lens is attached.

Service function–2 (all displays turn on)
- By installing a battery while pressing and holding Mode, Drive–Mode and Program Reset Buttons are pressed and held simultaneously, all displays appear in Data Panel and Viewfinder.

※Resume to normal display by removing and installing the battery.

Standard

AE level

(manual shutter speed) *Using Shutter Tester MODEL S–2201, S–2101

Shutter speed	Standard (ms)	Allowable range (ms)	Difference	Uneven exposure
1/2000	0.488	0.311–0.766	±0.65EV	Difference between max. and min. of three values (Range –A, –B, –C): within±0.6EV Difference between range –A & –B, range –B & –C: ±0.3EV
1/1000	0.977	0.667–1.430	±0.55EV	
1/500	1.95	1.58–2.40	±0.3EV	
1/250	3.91	3.18–4.81		
1/125	7.81	6.34–9.62		
1/90	11.1	9.02–13.7		
1/60	15.6	12.7–19.2		
1/30	31.3	29.2–33.5	±0.1EV	
1/15	62.5	58.3–67.0		
1/8	125	117–134		
1/4	250	233–268		
1/2	500	467–536		

X–sync delay time

Shutter speed	Measured item	Allowable range
1/90	X–contact delay time	0.4 to 0.9ms
	From X–contact on to 2nd curtain appearance	2.4ms or more

AE (automatic)

*Using standard lens (50/1.7), ISO 100 film, and EE tester (K value: 1.3)

Exposure mode	Luminance	Shutter speed	Aperture	Allowable range
P	EV15 EV12 EV10 EV6 EV4	–	–	within 0±1.0EV
A	EV15 EV10 EV10 EV10 EV6	–	F5.6 F1.7 F5.6 F22 F5.6	
S	EV15 EV10 EV10 EV10 EV6	1/1000 1/250 1/30 1/8 1	–	

Flash level

*Using ISO 100 film

Within F5.6±0.5EV

*See page 30 of Repair Guide.

Current leak

*Using 5.8V, 2CR5–type Power Supply Adapter

Condition	Allowable range
During Main Switch lock	50μA or less
During Main Switch on	50μA or less

Current consumption

*Using 5.8V, 2CR5–type Power Supply Adapter

Condition	Allowable range
Film advance	700mA or less
Film rewind	700mA or less

B.C. lock voltage

*Using 2CR5–type Power Supply Adapter for B.C. adjustment

4.75V

*See page 33 of Repair Guide.

Body back

44.675 – 44.730

INDEX

PART NO.	PAGE
2151-0105	1
2078-0114	8
2094-0114	8
2092-0117	8
2092-0119	8
2082-0120	1
2089-0121	1
2151-0131	7
2151-0135	7
2092-0139	2
2151-0140	2
2085-0145	7
2092-0146	3
2092-0150	5
2092-0161	7
2151-0162	7
2092-0167	7
2078-0180	3
2092-0191	8
2092-0201	2
2092-0250	6
2077-0253	5
2092-0260	6
2092-0277	6
2092-0278	6
2151-0320	2
2078-0330	3
2092-0331	3
2078-0332	2

PART NO.	PAGE
2151-0408	4
2092-0413	2
2092-0415	6
2092-0416	3
2092-0426	4
2092-0455	2
2151-0500	5, 6
2092-0545	5
2151-0580	4
2092-1002	2
2092-1003	1
2092-1004	1
2072-1010	5
2151-1011	5
2089-1011	3
2092-1013	3
2092-1014	5
2092-1015	5
2092-1016	5
2092-1017	5
2092-1018	5
2092-1019	5
2151-1020	5
2078-1023	1
2092-1060	1
2092-1061	1
2075-1062	1, 2
2078-1072	3
2078-1073	3

PART NO.	PAGE
2085-1087	3
2092-1106	8
2092-1111	8
2076-1112	8
2092-1163	8
2092-1165	8
2092-1169	8
2082-1205	1
2092-1211	3
2082-1212	3
2092-1213	3
2419-1292	8
2151-1312	1
2151-1313	1
2092-1316	4
2092-1318	1
2092-1323	7
2092-1324	7
2092-1338	1
2092-1340	7
2151-1341	1
2092-1402	1
2092-1411	4
2077-1418	1
2092-1422	1
2151-1429	7
2092-1431	7
2092-1432	7
2092-1433	7
2092-1434	7
2092-1435	7

INDEX

PART NO.	PAGE	PART NO.	PAGE	PART NO.	PAGE
2092-1436	7	2092-1603	7	2151-3014	2
2092-1437	7	2092-1604	7	2078-3030	2
2092-1438	4	2085-1605	7	2092-3051	3
2092-1444	7	2092-1606	7	2151-3055	3
2085-1445	7	2092-1608	7	2092-3056	3
2085-1446	7	2085-1611	7	2092-3057	3
2085-1453	7	2085-1616	7	2092-3303	3
2085-1454	7			2078-3304	1
2092-1480	1	2085-2004	2	2092-3305	2
2092-1481	1	2092-2531	5		
2092-1482	5	2092-2532	5	2092-4004	3
2092-1490	5	2085-2589	6	2092-4008	7
2092-1505	5	2077-2616	6	2092-4010	4
2092-1506	5	2085-2619	6	2092-4011	4
2092-1511	5	2085-2620	2	2092-4012	4
2092-1515	5	2092-2701	3	2092-4014	1
2085-1516	5	2092-2702	3	2151-4201	4
2092-1521	5	2092-2703	6	2092-4202	4
2092-1523	2	2092-2704	3	2151-4206	4
2092-1524	2	2092-2705	6	2092-4207	4
2092-1525	2	2092-2706	6	2094-4261	8
2092-1526	5	2092-2710	6	2076-4401	9
2092-1527	5	2092-2711	1	2085-4405	9
2092-1528	5	2092-2712	1	2092-4403	9
2092-1529	1	2092-2713	2	2092-4411	7
2092-1530	1	2092-2714	2	2085-4412	7
2092-1538	5	2092-2715	2	2092-4502	2
2092-1540	5	2092-2717	1	2092-4503	2
2151-1601	7	2092-2719	3	2092-4513	2
2092-1602	7	2092-2721	6	2082-4517	2

INDEX

PART NO.	PAGE
2092-5011	4
2085-5012	4
2092-5013	4
2092-5019	4
2092-5025	4
2092-5026	4
2092-5027	4
2092-5035	4
2092-5036	4
2092-5037	4
2089-5051	6
2072-5052	6
2092-5111	6
2078-5125	6
2092-5133	5
2078-5145	4, 8
2092-5151	6
2151-5805	4
2076-5806	6
2092-5815	4
2092-5816	4
2092-5817	4
9384-2190-50	2, 3, 4, 5, 6, 7
9384-2191-00	2
9384-2290-90	3, 6, 7
9384-2391-30	2, 3, 4, 6
9384-2590-50	1, 4

PART NO.	PAGE
9391-0807-00	9
9391-0807-01	9
9391-0807-02	9
9391-0807-03	9
9391-0807-04	9
9391-0807-05	9
9391-0807-06	9
9391-0807-07	9
9391-0807-08	9
9391-1210-01	9
9391-1210-03	9
9391-1210-06	9
9391-1210-09	9
9721-0150-50	1
9747-1425-07	7
9747-1730-07	6, 8
9747-1735-07	2, 3, 4, 5
9747-1740-07	2
9747-1740-15	1
9747-1745-07	2, 3
9747-1745-15	1
9747-1750-07	2, 3, 4, 5
9747-1750-15	1
9747-1755-15	1
9747-1760-07	2
9747-1760-15	1, 2
9747-1765-15	1
9747-1770-07	2

PART NO.	PAGE
9748-1730-07	1, 7
9749-1725-07	2
9749-1730-07	8
9761-1730-07	7
9761-1745-07	2
9761-1745-15	1, 3
9761-2045-07	2
9761-2050-07	1
9761-2060-01	1
9761-2060-04	5
9761-2060-07	2
9761-2060-15	3
9761-2065-07	2
9761-2065-15	3
9761-2080-07	5
9762-1740-07	1
9762-1745-07	6
9762-1790-07	1
9762-2060-01	7
9795-1837-40	6

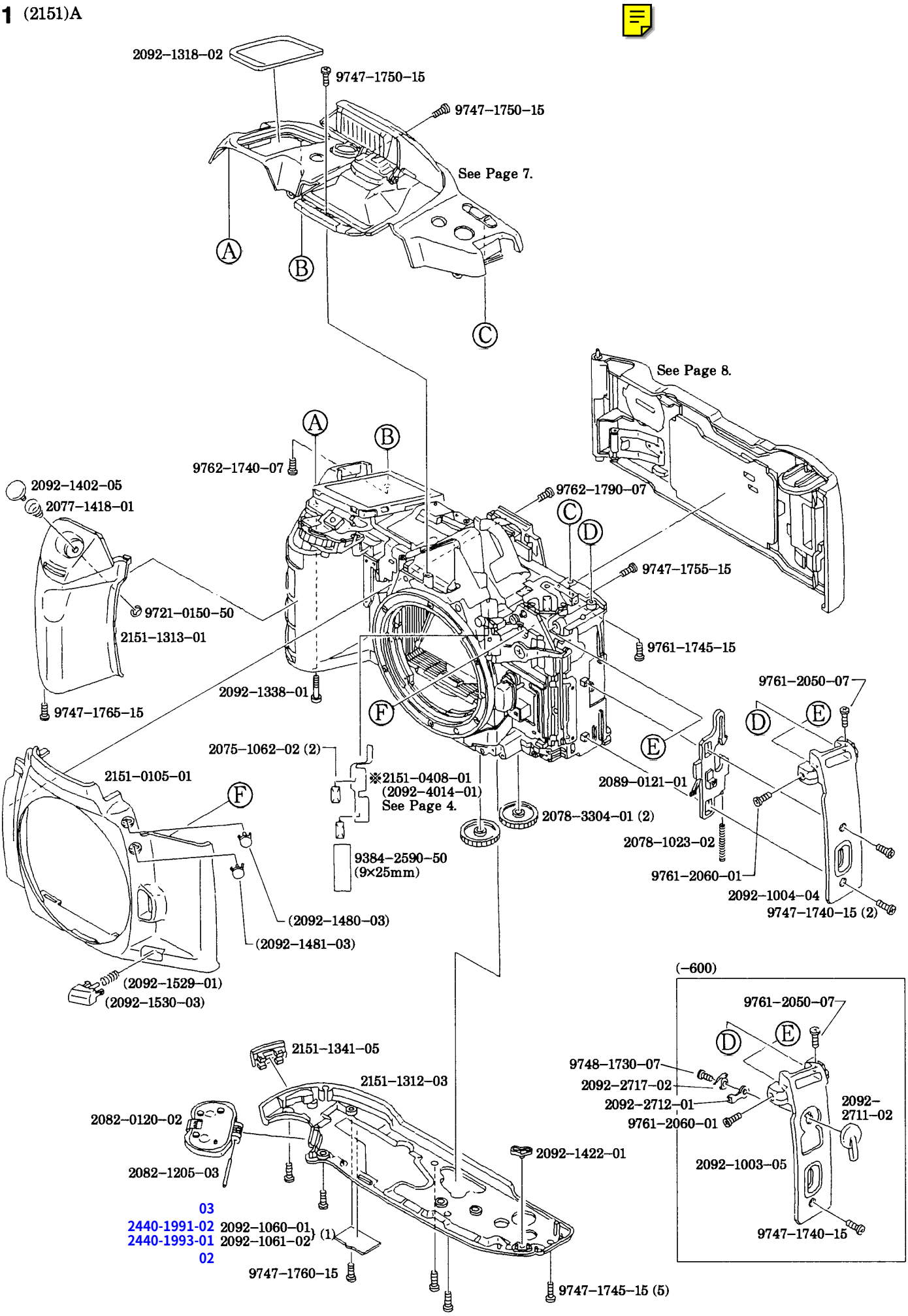
2092-1318-02
9747-1750-15
9747-1750-15
See Page 7.
A
B
C
See Page 8.
A
B
9762-1740-07
2092-1402-05
2077-1418-01
9762-1790-07
C
D
9747-1755-15
9721-0150-50
2151-1313-01
9761-1745-15
9761-2050-07
2092-1338-01
9747-1765-15
F
D
E
E
2075-1062-02 (2)
2151-0105-01
※2151-0408-01
(2092-4014-01)
See Page 4.
2089-0121-01
F
2078-3304-01 (2)
2078-1023-02
9384-2590-50
(9×25mm)
9761-2060-01
2092-1004-04
9747-1740-15 (2)
(2092-1480-03)
(2092-1481-03)
(2092-1529-01)
(2092-1530-03)
(-600)
9761-2050-07
D
E
2151-1341-05
9748-1730-07
2092-2717-02
2151-1312-03
2092-2712-01
2092-2711-02
2082-0120-02
9761-2060-01
2092-1422-01
2092-1003-05
2082-1205-03
03
2440-1991-02 2092-1060-01
2440-1993-01 2092-1061-02 (1)
02
9747-1740-15
9747-1760-15
9747-1745-15 (5)

PART NO.	PART NAME		QTY.
2151-0105-01	FRONT COVER ASSY	前カバーセット	1
(2092-1480-03)	FLASH-CONTROL BUTTON	フラッシュ釦	1
(2092-1481-03)	EXPOSURE-COMPENSATION BUTTON	＋／－釦	1
(2092-1529-01)	FOCUS-MODE BUTTON SP	フォーカスモード釦SP	1
(2092-1530-03)	FOCUS-MODE BUTTON	フォーカスモード釦	1
2082-0120-02	BATTERY COVER SET	電池室蓋セット	1
2089-0121-01	BACK-COVER RELEASE UNIT	裏蓋ロックレバーセット	1
2092-1003-05	BACK-COVER RELEASE COVER (-600)	裏蓋ロックカバー	1
2092-1004-04	BACK-COVER RELEASE COVER (-100, -200)	裏蓋ロックカバー	
2078-1023-02	LOCK SP	裏蓋ロックSP	1
~~2092-1060-01~~	SERIAL NUMBER PLATE	ボディNO．銘坂	1
~~2092-1061-02~~	SERIAL NUMBER PLATE (MADE IN MALAYSIA)	ボディNO．銘板	
2075-1062-02	OVER RIDE CONTACT	オーバーライド接片	2
2082-1205-03	BATTERY COVER HINGE AXIS	電池蓋ヒンジ軸	1
2151-1312-03	BOTTOM COVER	下カバー	1
2151-1313-01	GRIP COVER	グリップカバー	1
2092-1318-02	LCD WINDOW	LCD窓	1
2092-1338-01	SCREW	ねじ	1
2151-1341-05	REMOTE-RELEASE CAP	リモートレリーズ蓋	1
2092-1402-05	SHUTTER-RELEASE BUTTON	レリーズ釦	1
2077-1418-01	RELEASE BUTTON SPRING	レリーズ釦SP	1
2092-1422-01	REWIND BUTTON	途中巻戻し釦	1
*2440-1991-02	SERIAL NUMBER PLATE	ボディNO．銘坂	1
2440-1991-03	SERIAL NUMBER PLATE	ボディNO．銘坂	
*2440-1993-01	SERIAL NUMBER PLATE	ボディNO．銘坂	
2440-1993-02	SERIAL NUMBER PLATE	ボディNO．銘坂	
2092-2711-02	PANORAMA SWITCH (-600)	パノラマ切換えレバー	1
2092-2712-01	PANORAMA OPERATION LEVER-A (-600)	パノラマ可動レバーA	1
2092-2717-02	SPANO. CONTACT (-600)	SPANO．接片	1
2078-3304-01	REWIND GEAR-B	巻戻しギヤB	2
9384-2590-50	MENDING TAPE (1R/50M)	メンデイングテープ	1
9721-0150-50	E-RING	Eリング	1
9747-1740-15	SCREW (-100, -200)	ねじ	2
9747-1740-15	SCREW (-600)	ねじ	1
9747-1745-15	SCREW	ねじ	5
9747-1750-15	SCREW	ねじ	2
9747-1755-15	SCREW	ねじ	1
9747-1760-15	SCREW	ねじ	1
9747-1765-15	SCREW	ねじ	1
9748-1730-07	SCREW (-600)	ねじ	1
9761-1745-15	SCREW	ねじ	1
9761-2050-07	SCREW	ねじ	1
9761-2060-01	SCREW	ねじ	1
9762-1740-07	SCREW	ねじ	1
9762-1790-07	SCREW	ねじ	1
			1
2151-0408-01	See Page 4.	P．4参照	
(2092-4014-01)	FPC-N	Nフレキ	1

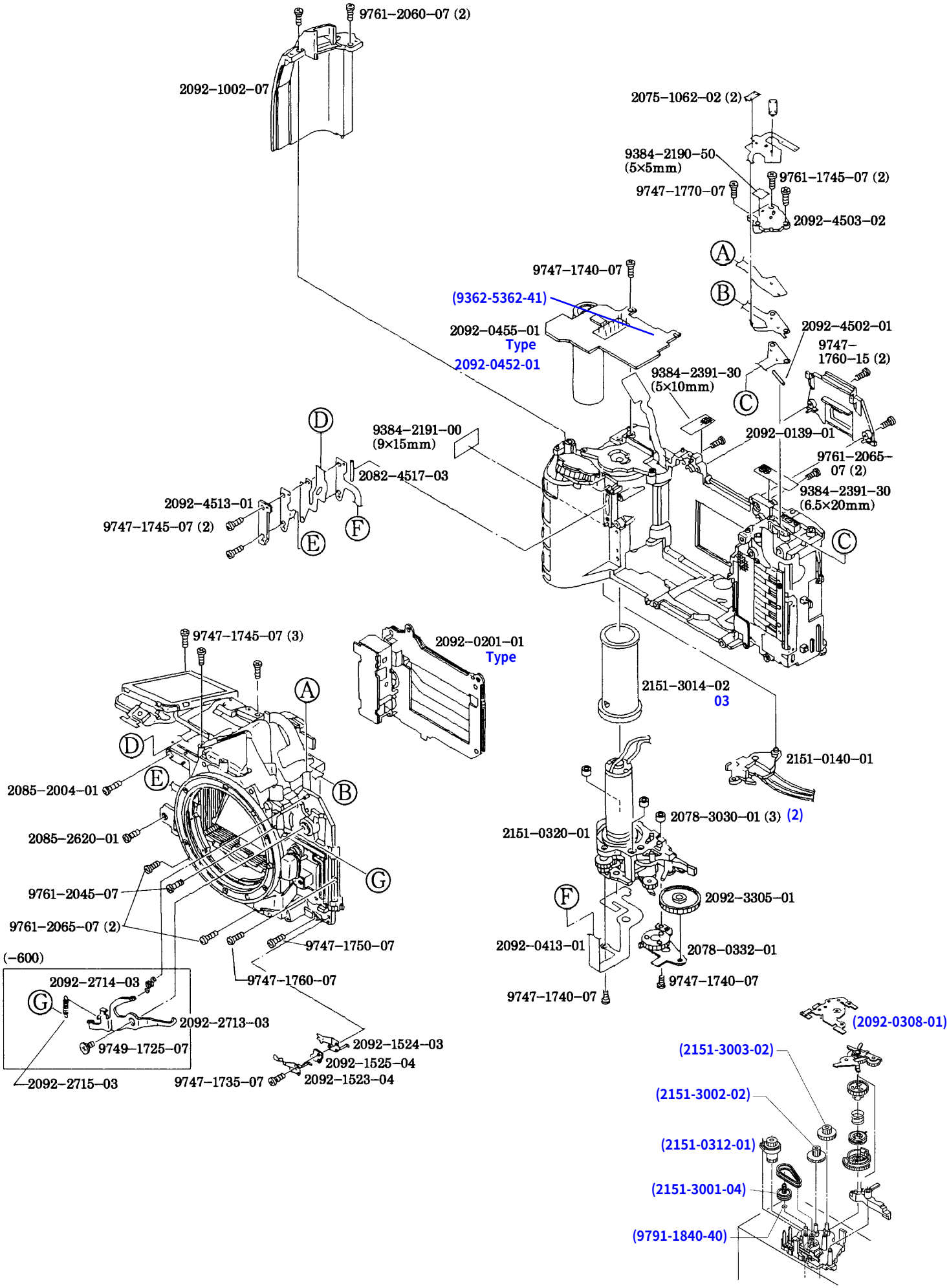
9761-2060-07 (2)
2092-1002-07
2075-1062-02 (2)
9384-2190-50
(5×5mm)
9761-1745-07 (2)
9747-1770-07
2092-4503-02
A
9747-1740-07
B
(9362-5362-41)
2092-0455-01
Type
2092-0452-01
2092-4502-01
9747-
1760-15 (2)
9384-2391-30
(5×10mm)
C
D
9384-2191-00
(9×15mm)
2092-0139-01
9761-2065-
07 (2)
2082-4517-03
9384-2391-30
(6.5×20mm)
2092-4513-01
9747-1745-07 (2)
E
F
C
9747-1745-07 (3)
2092-0201-01
Type
A
2151-3014-02
03
D
2151-0140-01
E
B
2085-2004-01
2078-3030-01 (3) (2)
2085-2620-01
2151-0320-01
G
9761-2045-07
F
2092-3305-01
9761-2065-07 (2)
9747-1750-07
2092-0413-01
2078-0332-01
(-600)
9747-1760-07
2092-2714-03
9747-1740-07
9747-1740-07
G
2092-2713-03
(2092-0308-01)
9749-1725-07
2092-1524-03
(2151-3003-02)
2092-1525-04
2092-2715-03
9747-1735-07
2092-1523-04
(2151-3002-02)
(2151-0312-01)
(2151-3001-04)
(9791-1840-40)

PART NO.	PART NAME		QTY.
2092-0139-01	EYEPIECE FRAME UNIT	接眼枠セット	1
2151-0140-01	REMOTE-RELEASE ASSY	リモートホルダーセット	1
2092-0201-01	SHUTTER UNIT	シャッターユニット	1
2151-0320-01	WINDING BASE PLATE ASSY	巻き上げ台坂セット	1
(2092-0308-01)	PLANETARY GEAR ASSY	遊星ギヤセット	1
(2151-0312-01)	SPOOL DRIVE GEAR ASSY	スプール駆動ギヤセット	1
(2151-3001-04)	REDUCTION GEAR-A	減速ギヤA	1
(2151-3002-02)	REDUCTION GEAR-B	減速ギヤB	1
(2151-3003-02)	REDUCTION GEAR-C	減速ギヤC	1
(9791-1840-40)	WASHER	ワッシャ	1
2078-0332-01	REWIND BASE PLATE SET	巻戻し台板セット	1
2092-0413-01	FPC-M SET	Mフレキセット	1
2092-0452-01	FLASH CONVERTER PCB SET	フラッシュコンバーター基板セット	1
~~2092-0455-01~~	FLASH CONVERTER PCB SET	フラッシュコンバーター基板セット	1
(9362-5362-41)	Q161	Ｑ１６１	1
2092-1002-07	STRAP EYELET (R)	巻上げ側吊り環	1
2075-1062-02	OVER RIDE CONTACT	オーバーライド接片	2
2092-1523-04	SRAF. CONTACT-A	SRAF接片A	1
2092-1524-03	SRAF. CONTACT-B	SRAF接片B	1
2092-1525-04	SRAF. CONTACT SPACER	SRAF接片スペーサー	1
2085-2004-01	SCREW	ねじ	1
2085-2620-01	SCREW	ねじ	1
2092-2713-03	PANORAMA COUPLING LEVER-A (-600)	パノラマ連動レバーA	1
2092-2714-03	PANORAMA OPERATION SP-A (-600)	パノラマ駆動SP－A	1
2092-2715-03	PANORAMA COUPLING SP (-600)	パノラマ連結SP	1
*2151-3014-02	SPOOL	スプール	1
2151-3014-03	SPOOL	スプール	1
*2078-3030-01	SILENT COLLAR	消音ゴム	~~3~~ 2
2092-3305-01	REWIND GEAR-C	巻戻しギアC	1
2092-4502-01	RUBBER CONNECTOR	コネクターゴム	1
2092-4503-02	CONNECTOR BASE PLATE	コネクター台板	1
2092-4513-01	CONNECTOR PRESSURE	コネクター押さえ板	1
2082-4517-03	A-F-M RUBBER CONNECTOR	A－F－Mコネクターゴム	1
9384-2190-50	DOUBLE-FACED TAPE (PER ROLL)	両面テープ	1
9384-2191-00	DOUBLE-FACED TAPE (PER ROLL)	両面テープ	1
9384-2391-30	ACETATE TAPE (PER ROLL)	アセテートクロステープ	2
9747-1735-07	SCREW	ねじ	1
9747-1740-07	SCREW	ねじ	3
9747-1745-07	SCREW	ねじ	5
9747-1750-07	SCREW	ねじ	1
9747-1760-07	SCREW	ねじ	1
9747-1760-15	SCREW	ねじ	2
9747-1770-07	SCREW	ねじ	1
9749-1725-07	SCREW (-600)	ねじ	1
9761-1745-07	SCREW	ねじ	2
9761-2045-07	SCREW	ねじ	1
9761-2060-07	SCREW	ねじ	2
9761-2065-07	SCREW	ねじ	4

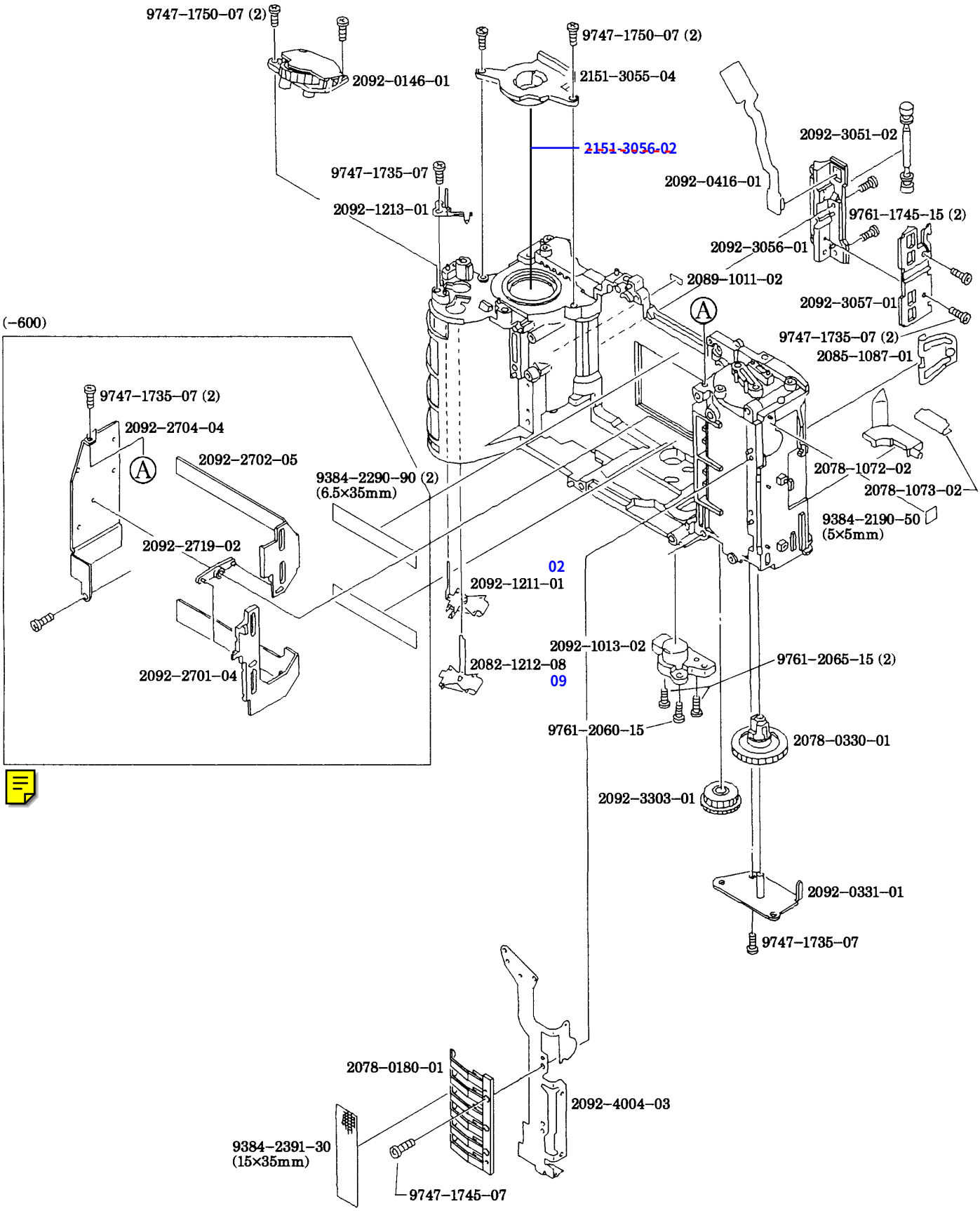
9747-1750-07 (2)
2092-0146-01
9747-1750-07 (2)
2151-3055-04
2151-3056-02
2092-3051-02
9747-1735-07
2092-0416-01
2092-1213-01
9761-1745-15 (2)
2092-3056-01
2089-1011-02
2092-3057-01
(-600)
9747-1735-07 (2)
2085-1087-01
9747-1735-07 (2)
2092-2704-04
2092-2702-05
9384-2290-90 (2)
(6.5×35mm)
2078-1072-02
2078-1073-02
9384-2190-50
(5×5mm)
2092-2719-02
02
2092-1211-01
2092-1013-02
9761-2065-15 (2)
2082-1212-08
09
2092-2701-04
9761-2060-15
2078-0330-01
2092-3303-01
2092-0331-01
9747-1735-07
2078-0180-01
2092-4004-03
9384-2391-30
(15×35mm)
9747-1745-07

PART NO.	PART NAME		QTY.
2092-0146-01	DIAL UNIT	ダイヤルセット	1
2078-0180-01	DX CONTACTS SET	CAS接片セット	1
2078-0330-01	REWIND FORK SET	巻戻しフォークセット	1
2092-0331-01	REWIND FORK BASE PLATE UNIT	巻戻しフォーク台板セット	1
2092-0416-01	FPC-P SET	Pフレキセット	1
2089-1011-02	LOADING INDEX	ローデイング指標	1
2092-1013-02	TRIPOD BASE PLATE	三脚台板	1
2078-1072-02	FILM CARTRIDGE RECEIVER	パト口金受け	1
2078-1073-02	CARTRIDGE RECEIVER SP	口金受回転SP	1
2085-1087-01	SIDE SP	サイドSP	1
*2092-1211-01	BATTERY CONTACT-A (-)	電池接片A（－）	1
2092-1211-02	BATTERY CONTACT-A (-)	電池接片A（－）	1
*2082-1212-08	BATTERY CONTACT-B (+)	電池接片B（＋）	1
2082-1212-09	BATTERY CONTACT-B (+)	電池接片B（＋）	1
2092-1213-01	BATTERY DETECT SW	電池検知SW	1
2092-2701-04	PANORAMA FRAME PLATE-A (-600)	パノラマ遮光板A	1
2092-2702-05	PANORAMA FRAME PLATE-B (-600)	パノラマ遮光板B	1
2092-2704-04	PANORAMA FRAME HOLDER-A (-600)	パノラマ遮光板押えA	1
2092-2719-02	PANORAMA COUPLING LEVER-B (-600)	パノラマ遮光連動レバーB	1
2092-3051-02	FILM ROLLER	フィルムローラー	1
2151-3055-04	WINDING MOTOR BASE PLATE	巻き上げモーター台板	1
2092-3056-01	FILM GUIDE	フィルムガイド	1
*2151-3056-02	SPACER	スペーサー	1
2092-3057-01	FPC-P HOLDER	Pフレキ押え板	1
2092-3303-01	REWIND GEAR-A	巻戻しギヤA	1
2092-4004-03	FPC-D	Dフレキ	1
9384-2190-50	DOUBLE-FACED TAPE (PER ROLL)	両面テープ	1
9384-2290-90	POLYESTER TAPE (PER ROLL/60M) (-600)	ポリエステルテープ	2
9384-2391-30	ACETATE TAPE (PER ROLL)	アセテートクロステープ	1
9747-1735-07	SCREW (-100, -200)	ねじ	4
9747-1735-07	SCREW (-600)	ねじ	6
9747-1745-07	SCREW	ねじ	1
9747-1750-07	SCREW	ねじ	4
9761-1745-15	SCREW	ねじ	2
9761-2060-15	SCREW	ねじ	1
9761-2065-15	SCREW	ねじ	2

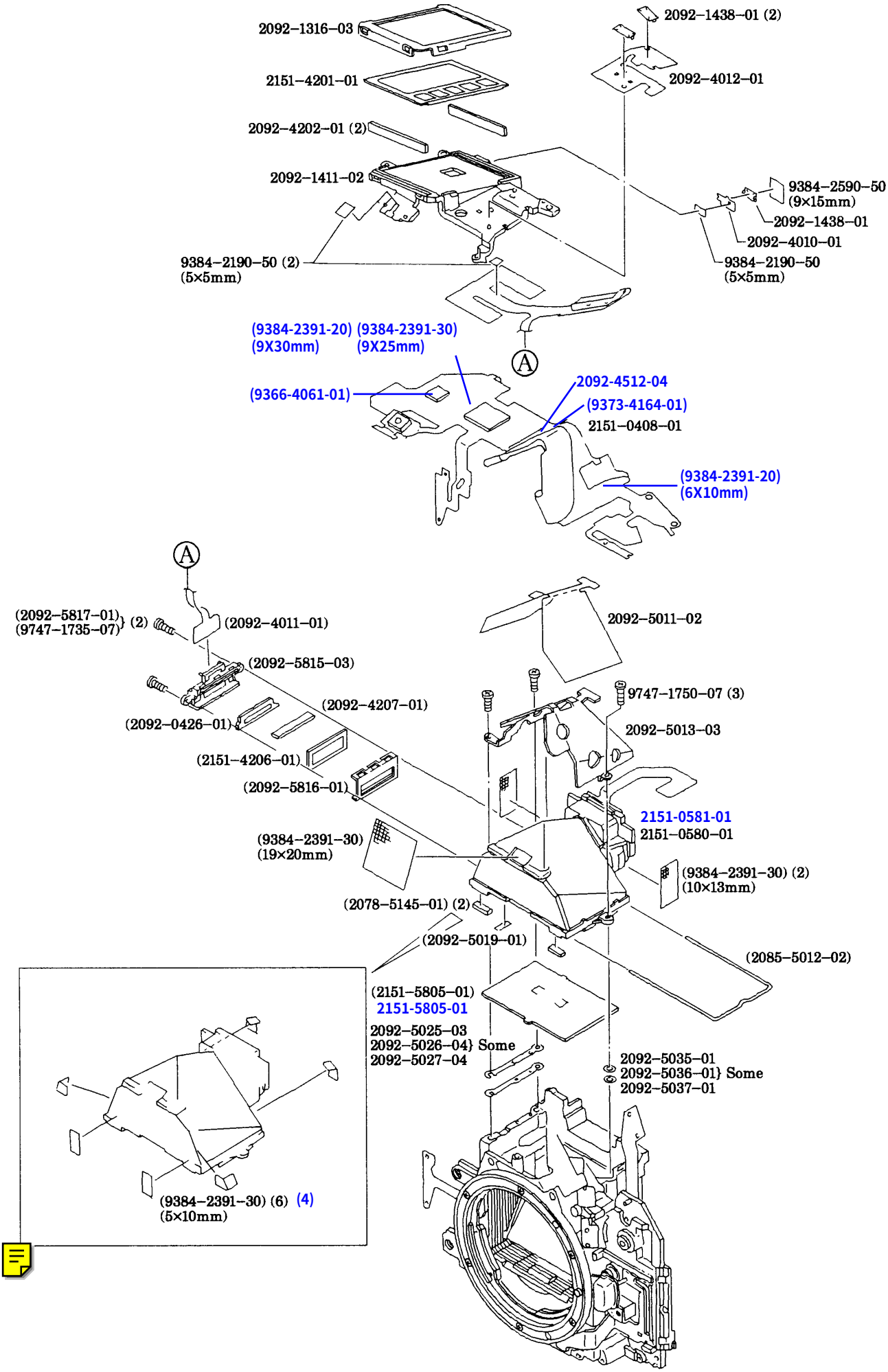
2092–1316–03
2151–4201–01
2092–4202–01 (2)
2092–1411–02
9384–2190–50 (2)
(5×5mm)
2092–1438–01 (2)
2092–4012–01
9384–2590–50
(9×15mm)
2092–1438–01
2092–4010–01
9384–2190–50
(5×5mm)
(9384-2391-20)
(9X30mm)
(9384-2391-30)
(9X25mm)
A
(9366-4061-01)
2092-4512-04
(9373-4164-01)
2151–0408–01
(9384-2391-20)
(6X10mm)
A
(2092–5817–01)
(9747–1735–07) (2)
(2092–4011–01)
(2092–5815–03)
(2092–4207–01)
(2092–0426–01)
(2151–4206–01)
(2092–5816–01)
(9384–2391–30)
(19×20mm)
(2078–5145–01) (2)
(2092–5019–01)
2092–5011–02
9747–1750–07 (3)
2092–5013–03
2151-0581-01
2151–0580–01
(9384–2391–30) (2)
(10×13mm)
(2085–5012–02)
(2151–5805–01)
2151-5805-01
2092–5025–03
2092–5026–04} Some
2092–5027–04
2092–5035–01
2092–5036–01} Some
2092–5037–01
(9384–2391–30) (6) (4)
(5×10mm)

PART NO.	PART NAME		QTY.
2151-0408-01	FPC-A ASSY	Aフレキセット	1
(2092-4512-04)	FPC-A BASE PLATE	Aフレキ台板	1
(9366-4061-01)	IC-5	IC−5	1
(9373-4164-01)	XL-1	XL－1	1
(9384-2391-20)	ACETATE TAPE (PER ROLL)	アセテートクロステープ	2
~~(9384-2391-30)~~	ACETATE TAPE (PER ROLL)	アセテートクロステープ	1
*2151-0580-01	PENTA-PRISM ASSY	ペンタブロックセット	1
2151-0581-01	PENTA-PRISM ASSY	ペンタブロックセット	1
(2092-0426-01)	BACK LIGHT UNIT	バックライトユニット	1
(2092-4011-01)	FPC-K	Kフレキ	1
(2151-4206-01)	LCD 2	LCD 2	1
(2092-4207-01)	LCD 2 CONNECTOR	LCD 2コネクター	1
(2085-5012-02)	FRESNEL LENS SP	焦点板押えSP	1
(2092-5019-01)	PENTA-PRISM LIGHT SHIELD SHEET	ペンタ遮光シート	1
(2078-5145-01)	MIRROR CUSION	主ミラークッション	2
*(2151-5805-01)	FOCUSING SCREEN	焦点板	1
(2092-5815-03)	VIEWFINDER LCD HOLDER	インファインダーLCDホルダー	1
(2092-5816-01)	LCD 2 PRESSURE	LCD 2押え	1
(2092-5817-01)	SCREW	ねじ	2
(9747-1735-07)	SCREW	ねじ	
*(9384-2391-30)	ACETATE TAPE (PER ROLL)	アセテートクロステープ	~~9~~ 7
2092-1316-03	LCD 1 PRESSURE	LCD 1押え	1
2092-1411-02	SHUTTER-RELEASE BASE	レリーズ台坂	1
2092-1438-01	CLICK CONTACT	クリック接片	3
2092-4010-01	FPC-J	Jフレキ	1
2092-4012-01	FPC-L	Lフレキ	1
2151-4201-01	LCD 1	LCD 1	1
2092-4202-01	LCD 1 CONNECTOR	LCD 1コネククー	2
2092-5011-02	PENTA INSULATION SHEET	ペンタ絶縁シート	1
2092-5013-03	PENTA PRESSURE	ペンタ押え	1
2092-5025-03	VB ADJUSTMENT PLATE-A (T=0.2)	VB調整板A	Some
2092-5026-04	VB ADJUSTMENT PLATE-B (T=0.15)	VB調整板B	
2092-5027-04	VB ADJUSTMENT PLATE-C (T=01)	VB調整板C	
2092-5035-01	VB ADJUSTMENT PLATE-D (T=0.2)	VB調整板D	Some
2092-5036-01	VB ADJUSTMENT PLATE-E (T=0.15)	VB調整板E	
2092-5037-01	VB ADJUSTMENT PLATE-F (T=0.1)	VB調整板F	
2151-5805-01	FOCUSING SCREEN	焦点板	1
9384-2190-50	DOUBLE-FACED TAPE (PAR ROLL)	両面テープ	3
9384-2590-50	MENDING TAPE (1R/50M)	メンデイングテープ	1
9747-1750-07	SCREW	ねじ	3

5 (2151)A

2151–0500–01

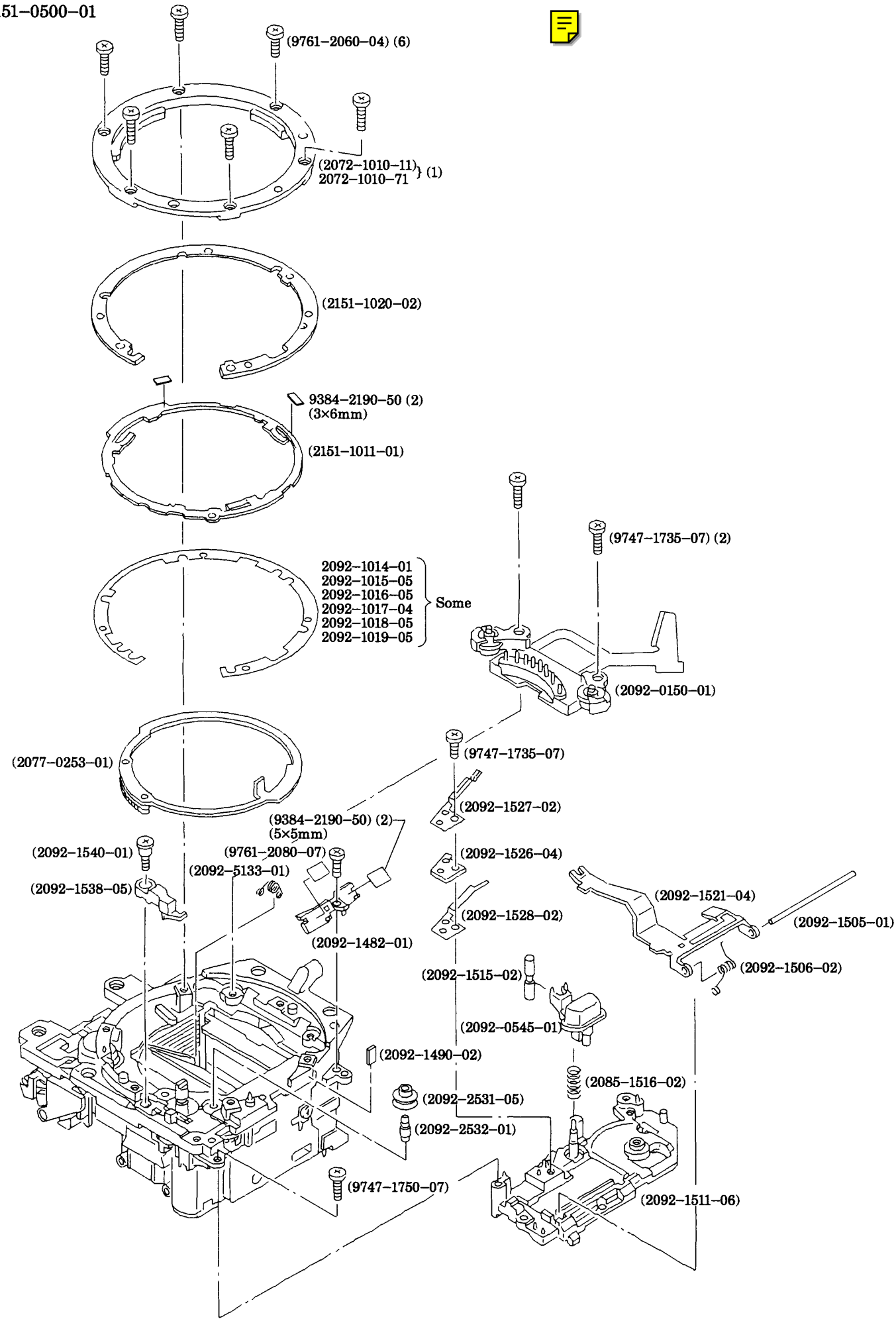

PART NO.	PART NAME		QTY.
2151-0500-01	MIRROR BOX ASSY	ミラーボックスセット	1
(2092-0150-01)	BL CONTACT HOLDER SET	BL接点ホルダーセット	1
(2077-0253-01)	APERTURE RING SET	絞りリングセット	1
(2092-0545-01)	LENS-RELEASE UNIT	レンズロック釦セット	1
(2072-1010-11)	BAYONET LENS MOUNT	マウント	1
(2151-1011-01)	BAYONET SP	リングSP	1
(2151-1020-02)	BAYONET SPACER	マウントスペーサー	1
(2092-1482-01)	EXPOSURE-COMPENSATION BUTTON BASE	＋／－釦台	1
(2092-1490-02)	SPACER	スペーサー	1
(2092-1505-01)	COUPLER LEVER AXIS	カプラーレバー軸	1
(2092-1506-02)	COUPLER LEVER SP	カプラーレバーSP	1
(2092-1511-06)	AF/M CONTACT BASE PLATE	AF／M接片台板	1
(2092-1515-02)	LENS-RELEASE	レンズロックピン	1
(2085-1516-02)	LOCK SET SP	ロックセットSP	1
(2092-1521-04)	COUPLER LEVER	カプラーレバー	1
(2092-1526-04)	SLLK. CONTACT SPACER	SLLK接片スペーサー	1
(2092-1527-02)	SLLK. CONTACT-A	SLLK接片A	1
(2092-1528-02)	SLLK. CONTACT-B	SLLK接片B	1
(2092-1538-05)	COUPLER STOP LEVER	カプラー係止レバー	1
(2092-1540-01)	SCREW	ねじ	1
(2092-2531-05)	RING ROLLER	リングローラー	1
(2092-2532-01)	RING ROLLER AXIS	リングローラー軸	1
(2092-5133-01)	SUB MIRROR SP	サブミラーSP	1
(9384-2190-50)	DOUBLE-FACED TAPE (PER ROLL)	両面テープ	4
(9747-1735-07)	SCREW	ねじ	3
(9747-1750-07)	SCREW	ねじ	1
(9761-2060-04)	SCREW	ねじ	6
(9761-2080-07)	SCREW	ねじ	1
2072-1010-71	BAYONET LENS MOUNT	マウント	1
2092-1014-01	BB ADJUSTMENT WASHER-A (T=0.05)	BB調整ワッシャA	Some
2092-1015-05	BB ADJUSTMENT WASHER-B (T=0.08)	BB調整ワッシャB	
2092-1016-05	BB ADJUSTMENT WASHER-C (T=01)	BB調整ワッシャC	
2092-1017-04	BB ADJUSTMENT WASHER-D (T=0.12)	BB調整ワッシャD	
2092-1018-05	BB ADJUSTMENT WASHER-E (T=0.15)	BB調整ワッシャE	
2092-1019-05	BB ADJUSTMENT WASHER-F (T=0.2)	BB調整ワッシャF	

2151–0500–01

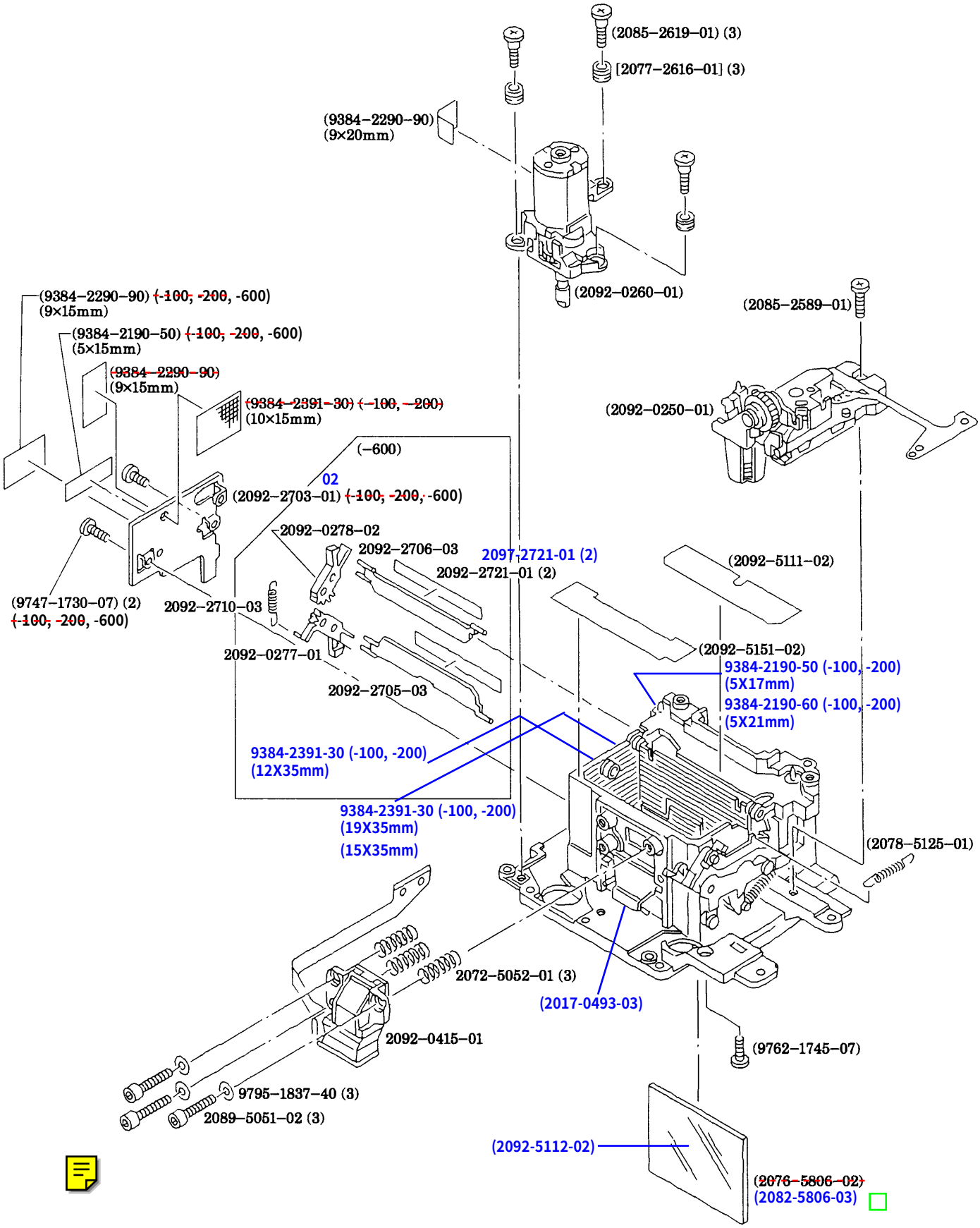
(2085–2619–01) (3)
[2077–2616–01] (3)
(9384–2290–90)
(9×20mm)
(2092–0260–01)
(2085–2589–01)
(9384–2290–90) ~~(-100, -200~~, -600)
(9×15mm)
(9384–2190–50) ~~(-100, -200~~, -600)
(5×15mm)
~~(9384–2290–90)~~
(9×15mm)
~~(9384–2391–30) (-100, -200)~~
(10×15mm)
(2092–0250–01)
(–600)
02
(2092–2703–01) ~~(-100, -200~~, -600)
2092–0278–02
2092–2706–03
2097-2721-01 (2)
2092–2721–01 (2)
(2092–5111–02)
(9747–1730–07) (2)
~~(-100, -200~~, -600)
2092–2710–03
2092–0277–01
(2092–5151–02)
9384-2190-50 (-100, -200)
(5X17mm)
9384-2190-60 (-100, -200)
(5X21mm)
2092–2705–03
9384-2391-30 (-100, -200)
(12X35mm)
9384-2391-30 (-100, -200)
(19X35mm)
(15X35mm)
(2078–5125–01)
2072–5052–01 (3)
(2017-0493-03)
2092–0415–01
(9762–1745–07)
9795–1837–40 (3)
2089–5051–02 (3)
(2092-5112-02)
~~(2076–5806–02)~~
(2082-5806-03)

PART NO.	PART NAME		QTY.
2151-0500-01			
(2092-0250-01)	APERTURE BASE PLATE UNIT	絞り台板セット	1
(2092-0260-01)	AF MOTOR BASE UNIT	AFモーター台板セット	1
[2077-2616-01]	COLLAR	AFサイレントカラー	3
(2085-2589-01)	SCREW	ねじ	1
(2085-2619-01)	SCREW	ねじ	3
*(2092-2703-01)	PANORAMA FRAME HOLDER-B (-100, -200, -600)	パノラマ遮光板押え－B	1
(2092-2703-02)	PANORAMA FRAME HOLDER-B	パノラマ遮光板押え－B	1
(2092-5111-02)	LIGHT SHIELD SHEET-A	遮光シートA	1
(2092-5112-02)	MASK SHEET	マスク板	1
(2078-5125-01)	MIRROR DOWN SP	主ミラーダウンSP	1
(2092-5151-02)	LIGHT SHIELD SHEET-B	遮光シートB	1
(2076-5806-02)	MAIN MIRROR	主ミラー	1
(2082-5806-03)	MAIN MIRROR	主ミラー	1
*(9384-2190-50)	DOUBLE-FACED TAPE (PER ROLL) (-100, -200, -600)	両面テープ	1
*(9384-2290-90)	POLYESTER TAPE (PER ROLL/60M) (-100, -200, -600)	ポリエステルテープ	3 2
*(9384-2391-30)	ACETATE TAPE (PER ROLL) (-100, -200)	アセテートクロステープ	1 2
*(9747-1730-07)	SCREW (-100, -200, -600)	ねじ	2
(9762-1745-07)	SCREW	ねじ	1
2092-0277-01	PANORAMA OPERATION LEVER UNIT-C (-600)	パノラマ可動レバーセットC	1
2092-0278-02	PANORAMA OPERATION LEVER UNIT-B (-600)	パノラマ可動レバーセットB	1
2092-0415-01	FPC-B SET	Bフレキセット	1
2092-2705-03	PANORAMA FRAME PLATE-C (-600)	パノラマ遮光板C	1
2092-2706-03	PANORAMA FRAME PLATE-D (-600)	パノラマ遮光板D	1
2092-2710-03	PANORAMA OPERATION SP-B (-600)	パノラマ騒動SP－B	1
*2092-2721-01	PROTECTION SHEET (-600)	保護シート	2
2097-2721-01	PROTECTION SHEET (-600)	保護シート	2
2089-5051-02	SCREW	ねじ	3
2072-5052-01	AF ADJUSTMENT SP	AF調整SP	3
9795-1837-40	WASHER	ワッシャ	3

7 (2151)A

2151–0131–01 (–100, –200)

2151–0135–01 (–600)

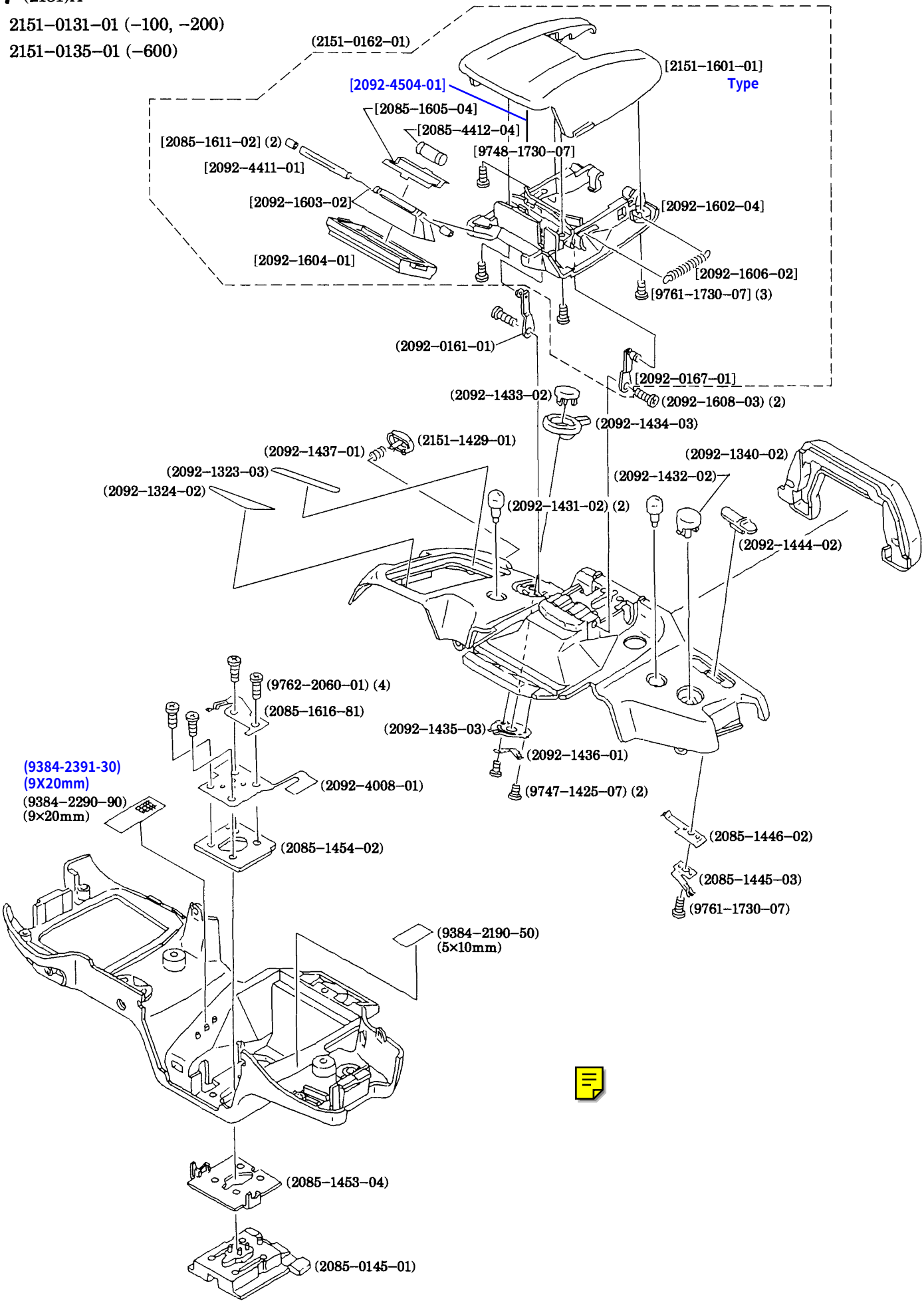

PART NO.	PART NAME		QTY.
2151-0131-01	TOP COVER ASSY (-100, -200)	上カバーセット	1
2151-0135-01	TOP COVER ASSY (-600)	上カバーセット	1
(2085-0145-01)	ACC. SHOE SET	アクセサリーシューセット	1
(2092-0161-01)	FLASH HOLDER UNIT-B	フラッシュ保持レバーセットB	1
(2151-0162-01)	FLASH ASSY	フラッシュユニット	1
[2092-0167-01]	FLASH HOLDER UNIT-A	フラッシュ保持レバーセットA	1
[2151-1601-01]	FLASH COVER	フラッシュカバー	1
[2092-1602-04]	FLASH BASE PLATE	フラッシュ台板	1
[2092-1603-02]	XE HOLDER-A	XEホルダー	1
[2092-1604-01]	FLASH PANEL	発光パネル	1
[2085-1605-04]	XE HOLDER-B	XEチューブ押さえ	1
[2092-1606-02]	UP/DOWN SP	アップ、ダウンSP	1
[2085-1611-02]	RUBBER TUBE	ゴムチューブ	2
[2092-4411-01]	XE TUBE	XEチューブ	1
[2085-4412-04]	TRIGGER COIL	トリガーコイル	1
[9748-1730-07]	SCREW	ねじ	1
[9761-1730-07]	SCREW	ねじ	3
(2092-1323-03)	DOUBLE-FACED TAPE-A	両面テープ-A	1
(2092-1324-02)	DOUBLE-FACED TAPE-B	両面テープ-B	1
(2092-1340-02)	EYEPIECE CUP	アイフード	1
(2151-1429-01)	SPOT BUTTON	スポット釦	1
(2092-1431-02)	DRIVE/SELF BUTTON	ドライブ／セルフ釦	2
(2092-1432-02)	EXPOSURE-MODE BUTTON	モード釦	1
(2092-1433-02)	PROGRAM-RESET BUTTON	P釦	1
(2092-1434-03)	COMMAND SWITCH	S／C切換えレバー	1
(2092-1435-03)	COMMAND SW. CLICK PLATE	S／Cクリック坂	1
(2092-1436-01)	COMMAND SW. CONTACT	S／C接片	1
(2092-1437-01)	APERTURE BUTTON SP	AV釦SP	1
(2092-1444-02)	MAIN SWITCH	メインSWレバー	1
(2085-1445-03)	MAIN SWITCH CONTACT	メインSW接片	1
(2085-1446-02)	MAIN SWITCH CLICK PLATE	メインSWクリック板	1
(2085-1453-04)	SHOE BASE	シュー敷板	1
(2085-1454-02)	SHOE SETTING PLATE	シュー取付板	1
(2092-1608-03)	SCREW	ねじ	2
(2085-1616-81)	POP-UP DETECT CONTACT	ポップアップ検知接片	1
(2092-4008-01)	FPC-H	Hフレキ	1
(2092-4504-01)	FLASH PROTECTION	フラッシュ保護板	1
(9384-2190-50)	DOUBLE-FACED TAPE (PAR ROLL)	両面テープ	1
(9384-2290-90)	POLYESTER TAPE (PER ROLL/60M)	ポリエステルテープ	1
(9384-2391-30)	ACETATE TAPE (PER ROLL)	アセテートクロステープ	1
(9747-1425-07)	SCREW	ねじ	2
(9761-1730-07)	SCREW	ねじ	1
(9762-2060-01)	SCREW	ねじ	4

NON DATE MODEL (–100)

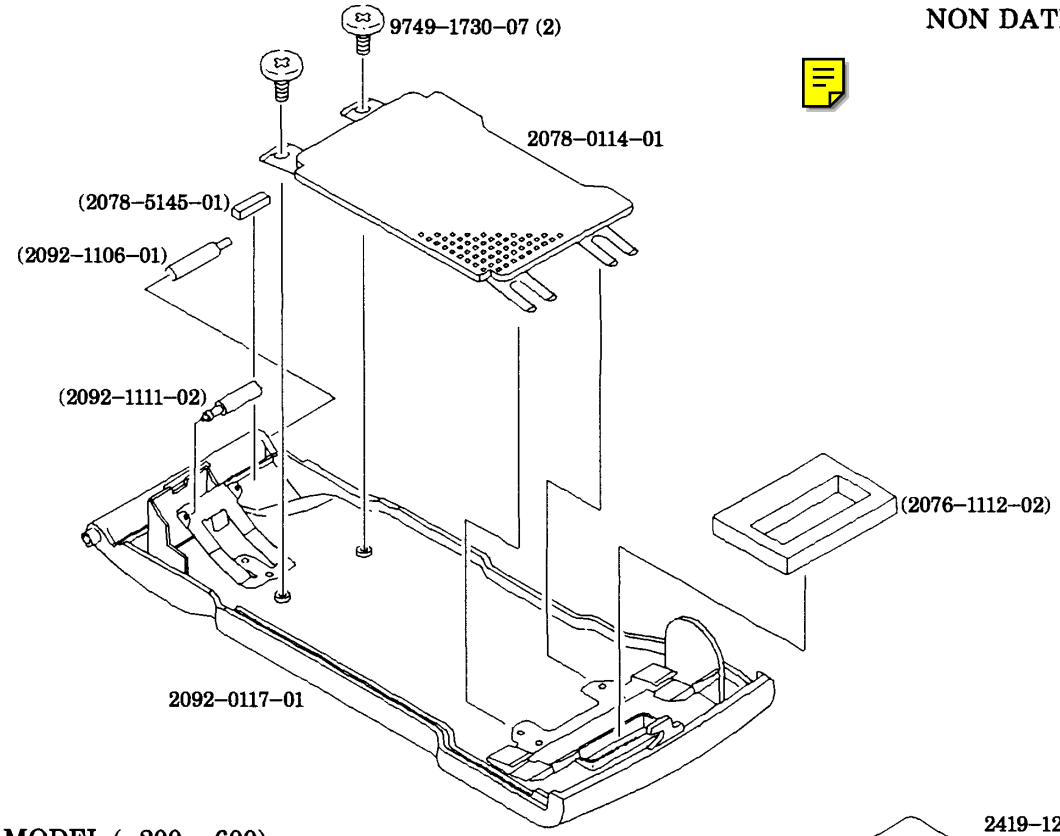

DATE MODEL (–200, –600)

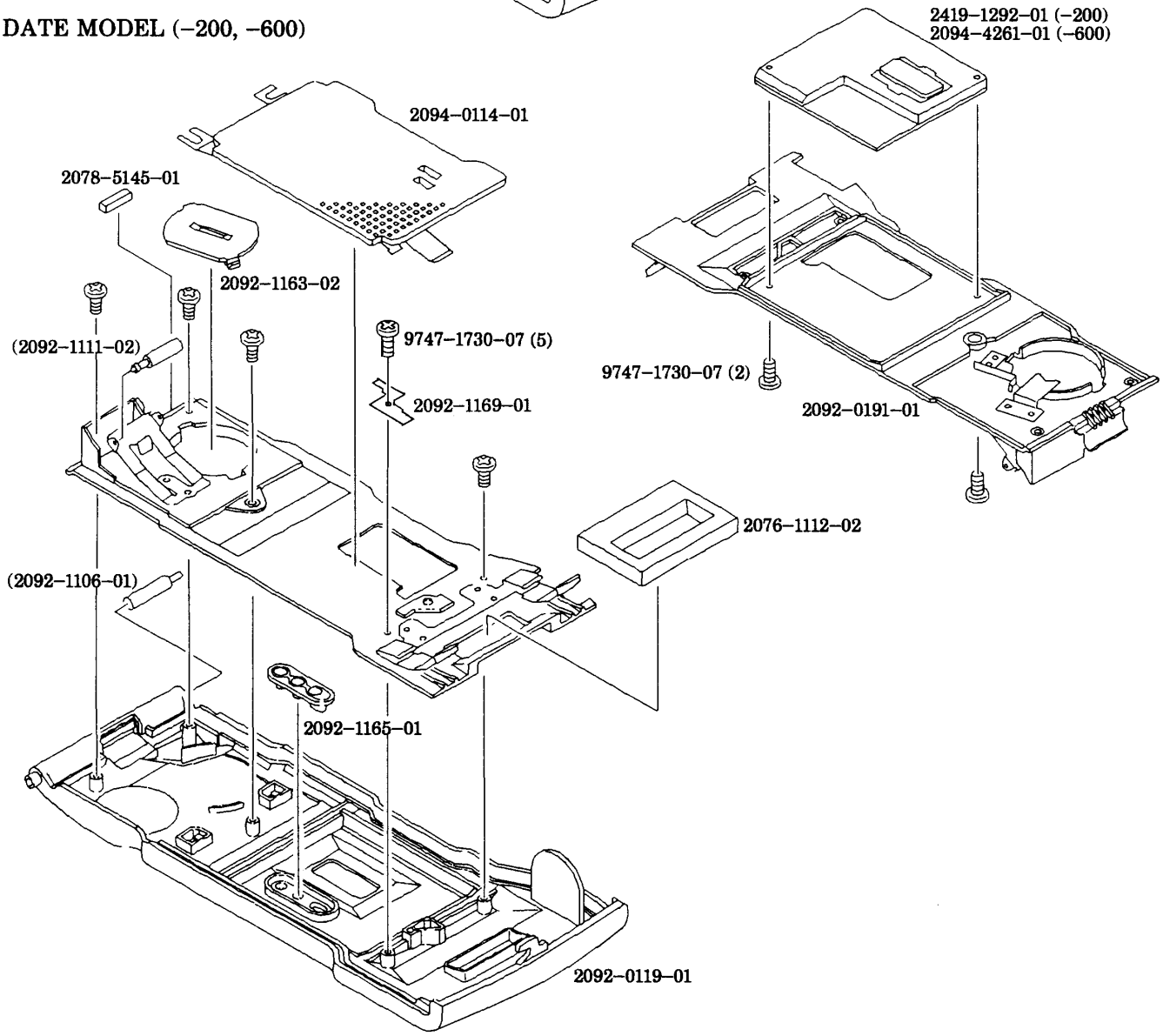

PART NO.	PART NAME		QTY.
	NON DATE MODEL (-100)		
2078-0114-01	PRESSURE PLATE SET	圧着板セット	1
2092-0117-01	BACK COVER UNIT (-100, -300)	裏蓋セット	1
(2092-1106-01)	BACK COVER HINGE AXIS	裏蓋ヒンジ軸	1
(2092-1111-02)	BACK COVER ROLLER	裏蓋可動ローラー	1
(2076-1112-02)	LIGHT SHIELD SPONGE	パト表示窓遮光片	1
(2078-5145-01)	MIRROR CUSION	主ミラークッション	1
9749-1730-07	SCREW	ねじ	2

	DATE MODEL (-200, -600)		
2094-0114-01	PRESSURE PLATE SET	圧着板セット	1
2092-0119-01	BACK COVER UNIT	裏蓋セット	1
(2092-1106-01)	BACK COVER HINGE AXIS	裏蓋ヒンジ軸	1
2092-0191-01	DATE MODULE BASE PLATE UNIT	デートモジュール台板セット	1
(2092-1111-02)	BACK COVER ROLLER	裏蓋可動ローラー	1
2076-1112-02	LIGHT SHIELD SPONGE	パト表示窓遮光片	1
2092-1163-02	BATTERY COVER	電池蓋	1
2092-1165-01	KEY	切換え釦	1
2092-1169-01	PRESSURE PLATE CONDUCTOR	DB圧板導通板	1
2419-1292-01	DATE MODULE (-200)	デートモジュール	1
2094-4261-01	DATE MODULE (-600)	デートモジュール	1
2078-5145-01	MIRROR CUSION	主ミラークッション	1
9747-1730-07	SCREW	ねじ	7

WIRING DIAGRAM 1 (2151)

LEAD WIRES LIST

2076-4401-01	(SHIELD)
2085-4402-03	(W41)
2092-4403-01	(W42)
9391-1210-□□	(W17, W18, W28, W29)
9391-0807-□□	(OTHER)

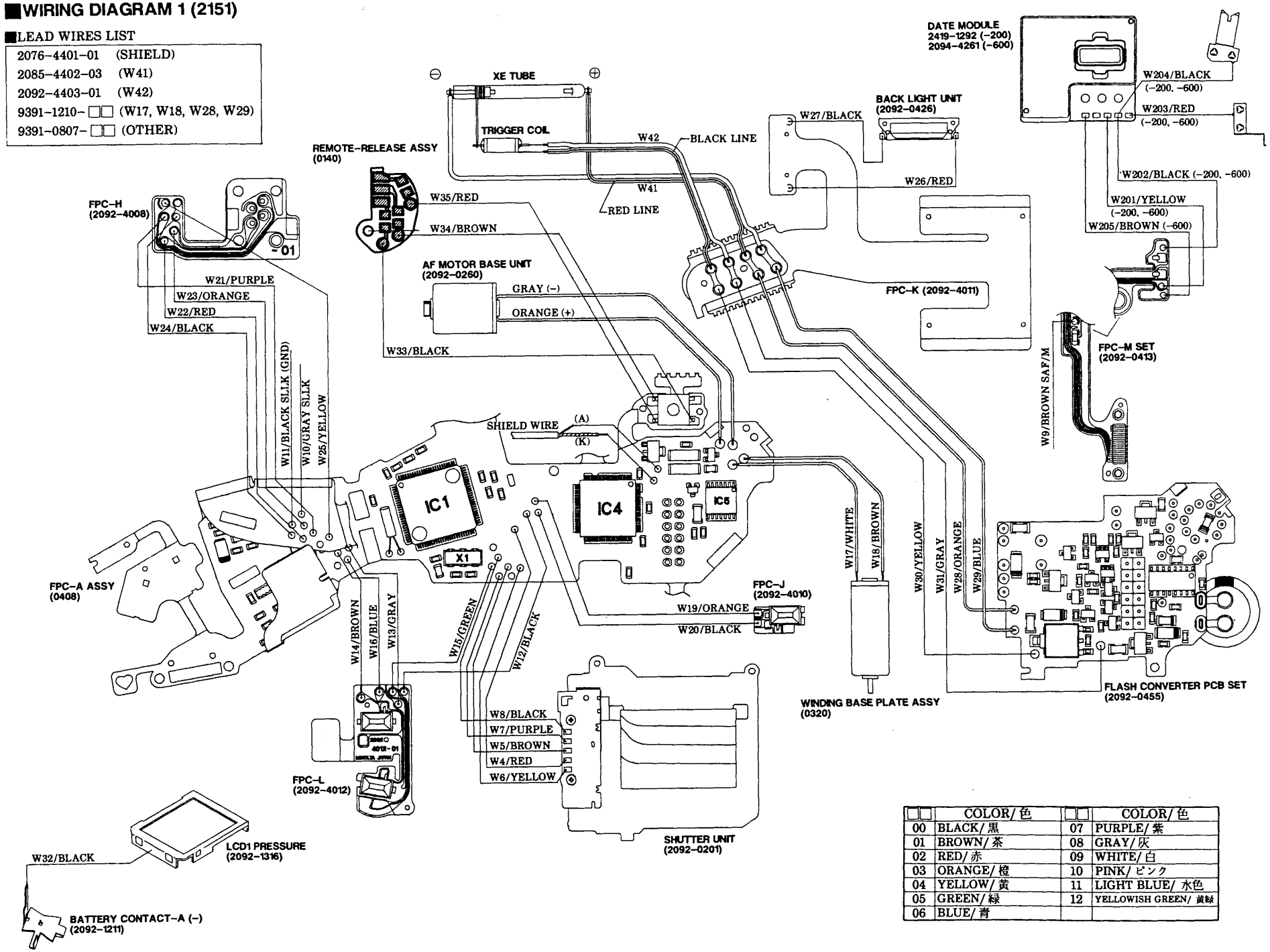

□□	COLOR/色	□□	COLOR/色
00	BLACK/黒	07	PURPLE/紫
01	BROWN/茶	08	GRAY/灰
02	RED/赤	09	WHITE/白
03	ORANGE/橙	10	PINK/ピンク
04	YELLOW/黄	11	LIGHT BLUE/水色
05	GREEN/緑	12	YELLOWISH GREEN/黄緑
06	BLUE/青		

MINOLTA MAXXUM 500si (2151-300)
MINOLTA MAXXUM RZ 530si DATE (2151-450)
MINOLTA MAXXUM 550si PANORAMA DATE (2151-800)
MINOLTA MAXXUM 500si SUPER (2151-850)

■This parts list contains only the exclusive parts for 2151-300/-450/-800/-850.
For parts not listed herein, refer to 2151-100/-200/-600 Parts List. Apply 2151-100 for -300, 2151-200 for -450, 2151-600 for -800 and -850.

■このパーツリストは、2151-300/-450/-800/-850 の専用部品をまとめたものです。
このパーツリスト以外の部品は 2151-300 が-100/ 2151-450 が-200/ 2151-800, -850 が-600 と共通ですので、2151-100/-200/-600 のパーツリストを参照して下さい。

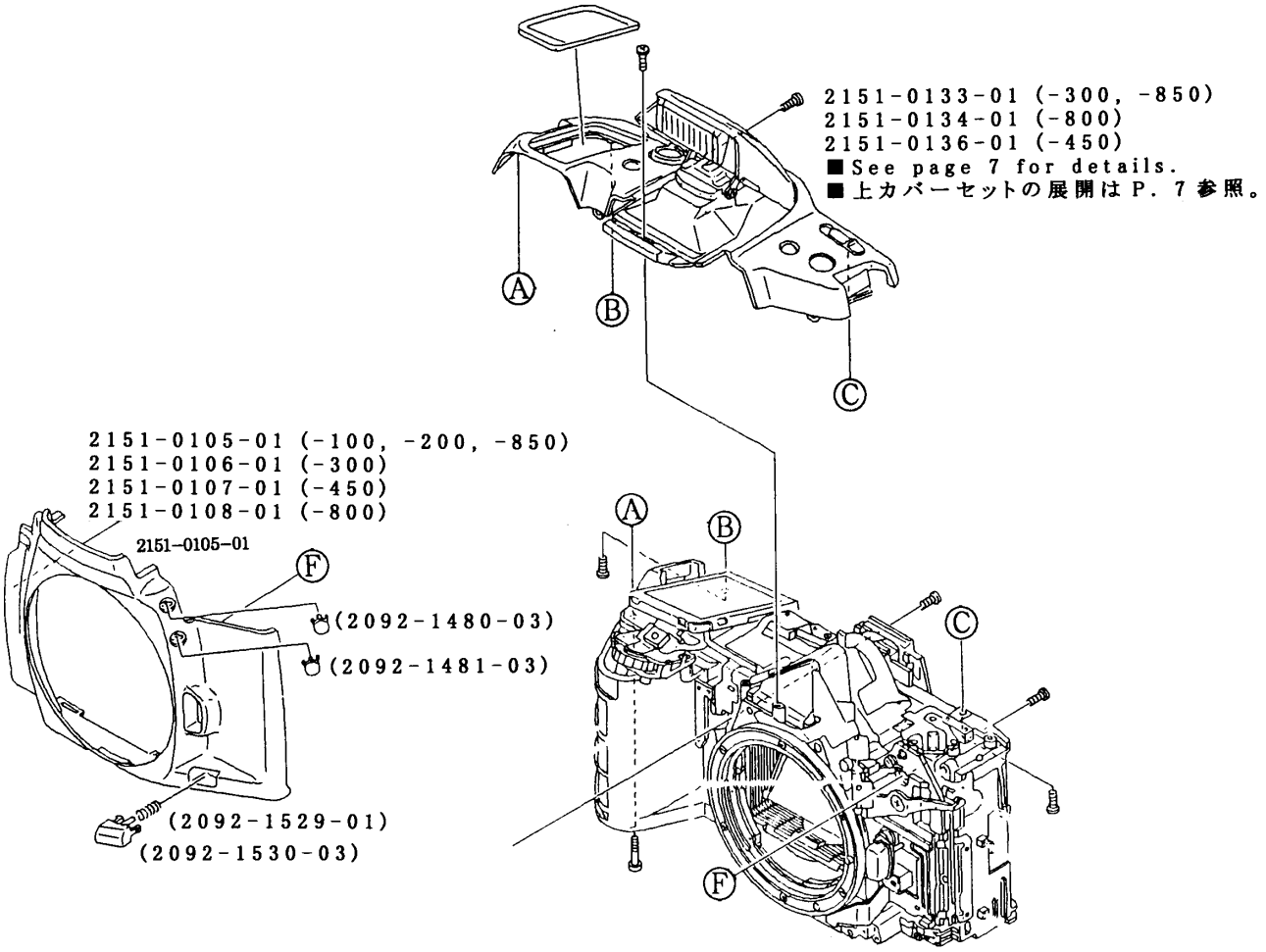

PART NO.	PART NAME		QTY.
2151-0105-01	FRONT COVER ASSY (-100, -200, -850)	前カバーセット	1
2151-0106-01	FRONT COVER ASSY (-300)	前カバーセット	1
2151-0107-01	FRONT COVER ASSY (-450)	前カバーセット	1
2151-0108-01	FRONT COVER ASSY (-800)	前カバーセット	1
2151-0133-01	TOP COVER ASSY (-300, -850)	上カバーセット	1
2151-0134-01	TOP COVER ASSY (-800)	上カバーセット	1
2151-0136-01	TOP COVER ASSY (-450)	上カバーセット	1

MINOLTA α-303si SUPER SILVER (2151-650)

■This parts list contains only the exclusive parts for 2151-650.
For parts not listed herein, refer to 2151-600 Parts List.

■このパーツリストは、2151-650 の専用部品をまとめたものです。
このパーツリスト以外の部品は、2151-600 と共通です。

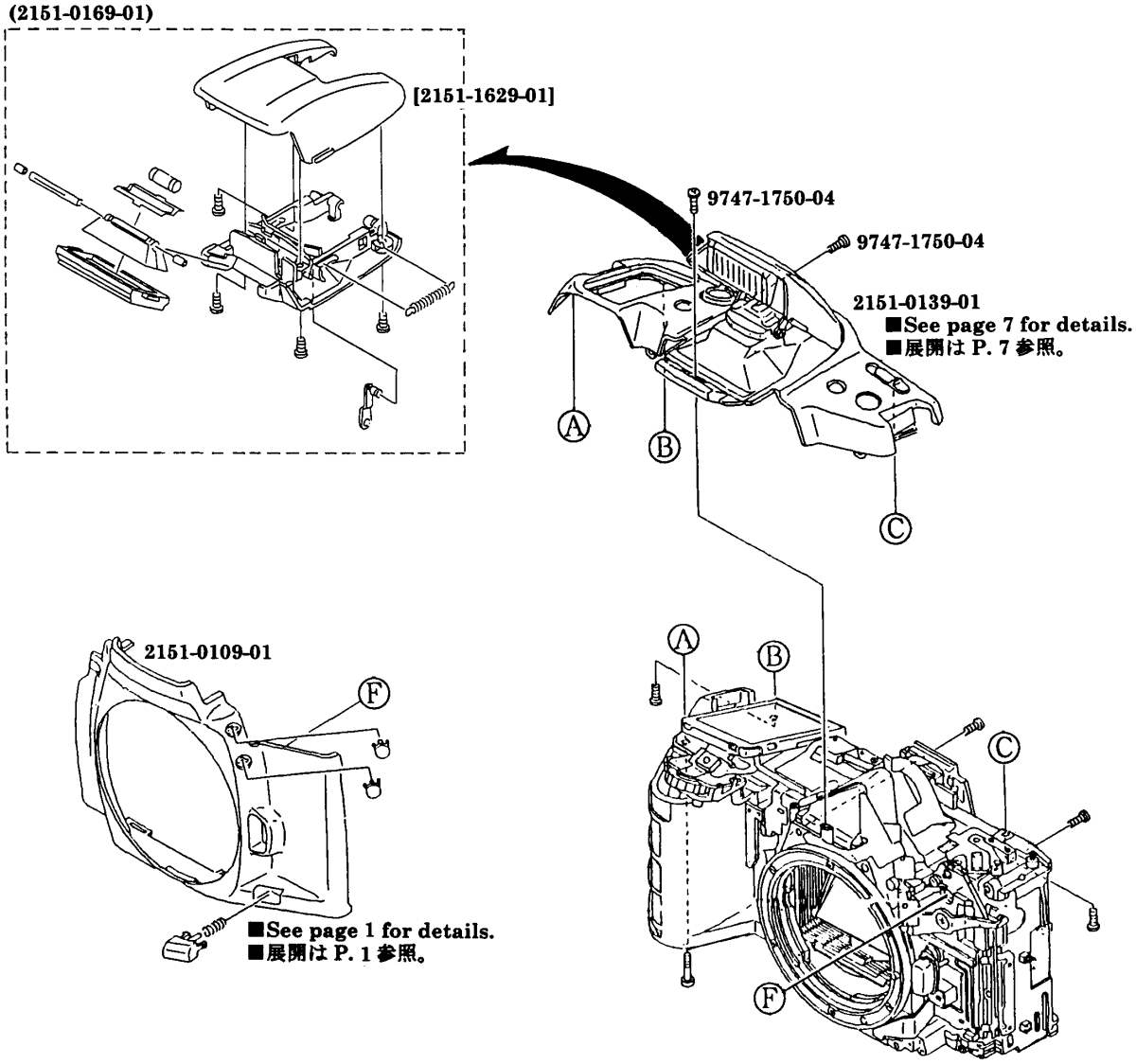

2151-0109-01	FRONT COVER ASSY (-650)	前カバーセット	1
2151-0139-01	TOP COVER ASSY (-650)	上カバーセット	1
(2151-0169-01)	FLASH ASSY (-650)	フラッシュユニット	1
[2151-1629-01]	FLASH COVER (-650)	フラッシュカバー	1
9747-1750-04	SCREW	ねじ	2

MINOLTA DYNAX 500si SUPER (SILVER) (2151-160)

■2151-160 is Panorama Non Date model.
■This parts list contains only the exclusive parts for 2151-160.
Other parts are common to 2151-600 except for Back Cover relative parts (page 8) which are common to 2151-100.

■この製品は、パノラマ付き、NON DATE モデルです。
■このパーツリストは、2151-160 の専用部品をまとめたものです。
このパーツリスト以外の部品 (裏蓋関係を除く)は、2151-600 と共通です。
但し、NON DATE のため裏蓋関係 (パーツリスト P. 8)は、2151-100 と共通です。

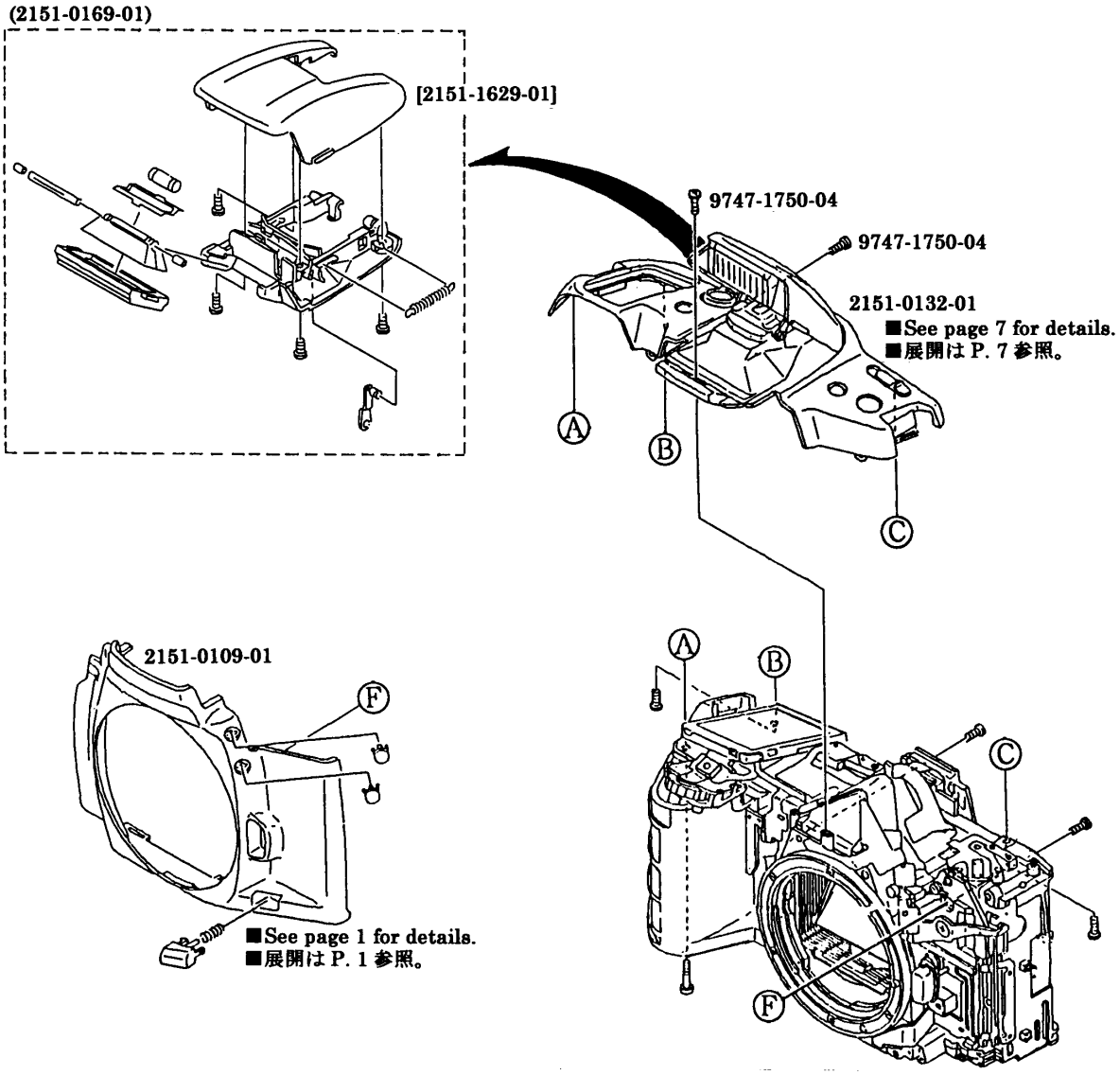

2151-0109-01	FRONT COVER ASSY (-160, 650)	前カバーセット	1
2151-0132-01	TOP COVER ASSY (-160)	上カバーセット	1
(2151-0169-01)	FLASH ASSY (-160, -650)	フラッシュユニット	1
[2151-1629-01]	FLASH COVER (-160, -650)	フラッシュカバー	1
9747-1750-04	SCREW	ねじ	2

管理 No. REF No.	10-2151-001

PARTS MODIFICATION LIST

■No. 001 Parts List P. 4 仮-508

変更理由 REASON	歪み防止 To keep prism in shape			共通機種 COMMON MODEL	2151 Series	
Previous	9384-2391-30	→ --	-- ←	9384-2391-30		New

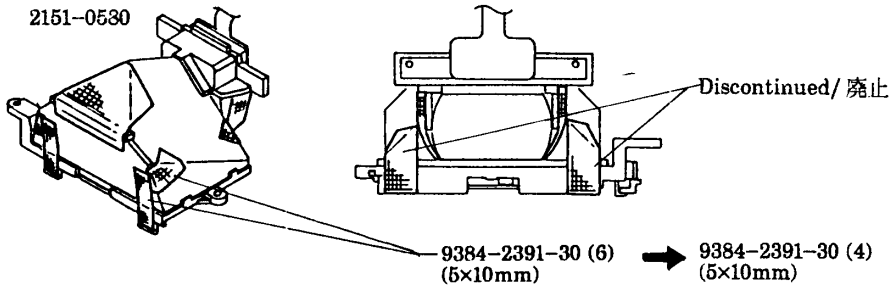

■本案内に従い、パーツリストへ転記等、メンテナンスを行って下さい。
According to this list, correct "Part List" in Service Manual for effective parts management.

MINOLTA CO.,LTD.

管理 No. REF No.	10-2151-002

PARTS MODIFICATION LIST

■No. 002 Parts List P. 3 2151-545

変更理由 REASON	異音防止 To reduce noise	共通機種 COMMON MODEL	2151 Series

Previous	----------	→ --	-- ←	2151-3056-02	New

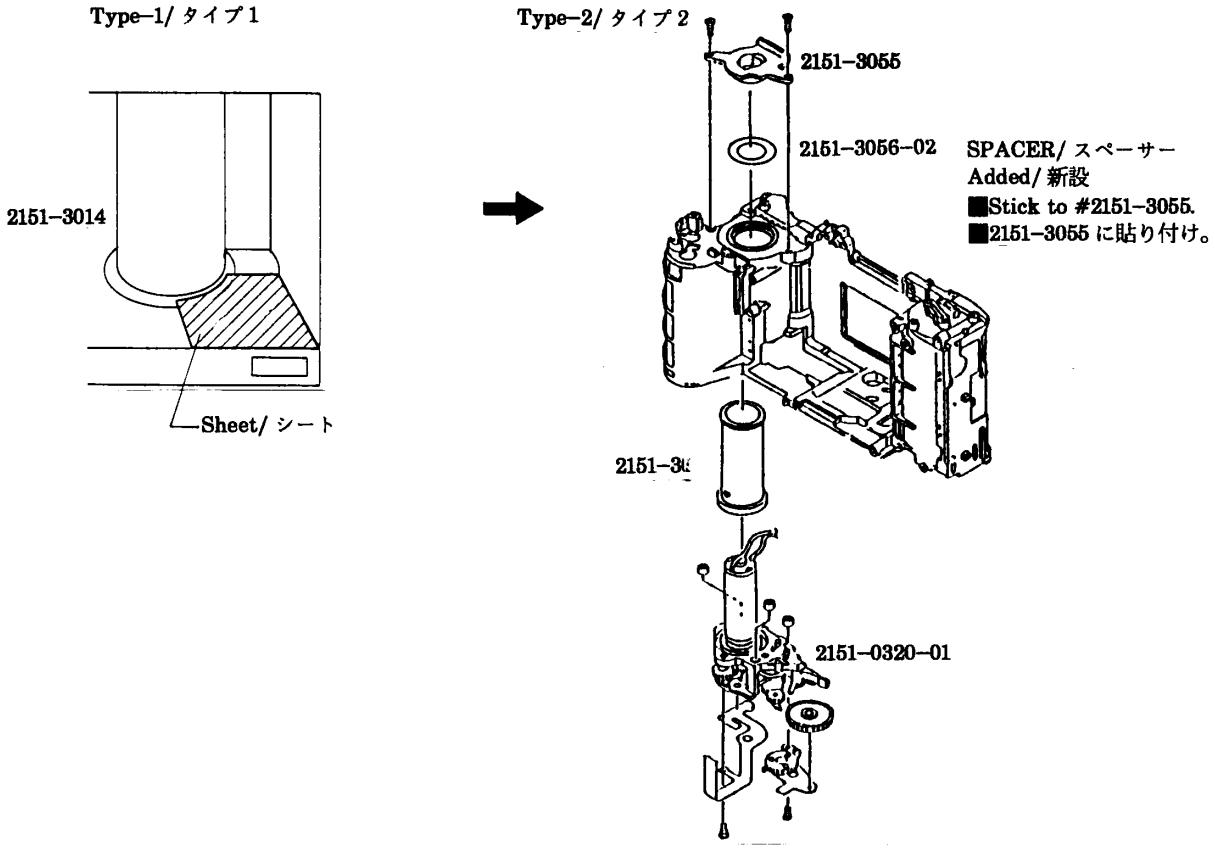

- タイプ1のシートは供給しません。
- タイプ1のシートが貼り付いている場合は、スペーサー(2151-3056-02) は不要です。
- The sheet for the type-1 is not available as a service part.
- The Spacer #2151-3056-02 is not needed for the type-1 having the sheet installed.

■本案内に従い、パーツリストへ転記等、メンテナンスを行って下さい。
According to this list, correct "Part List" in Service Manual for effective parts management.

MINOLTA CO.,LTD.

管理 No. REF No.	10-2151-003

PARTS MODIFICATION LIST

■No. 003 Parts List P. 4 2092-510

変更理由 REASON	ショート防止 To prevent short-circuit			共通機種 COMMON MODEL	2151 Series	
Previous	----------	→ --	-- ←	9384-2391-30		New

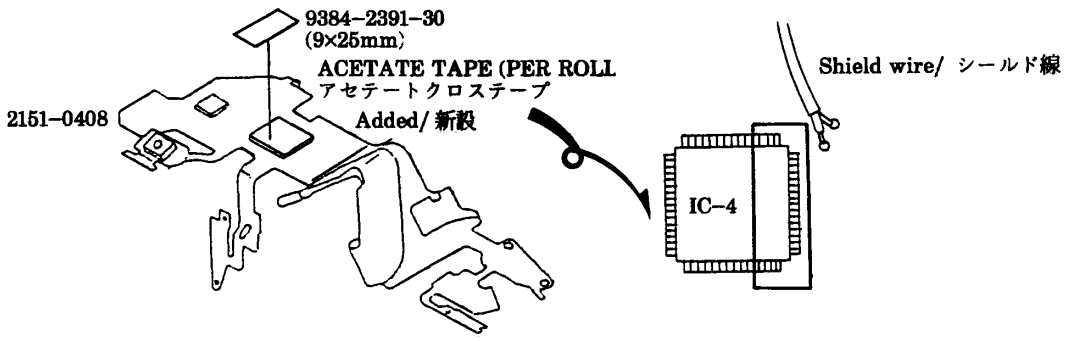

管理 No. REF No.	10-2151-004

■No. 004 Parts List P. 6 2151-542

変更理由 REASON	生産都合 For efficient production			共通機種 COMMON MODEL	2151 Series	
Previous	9384-2290-90	→ --	-- ←	----------		New

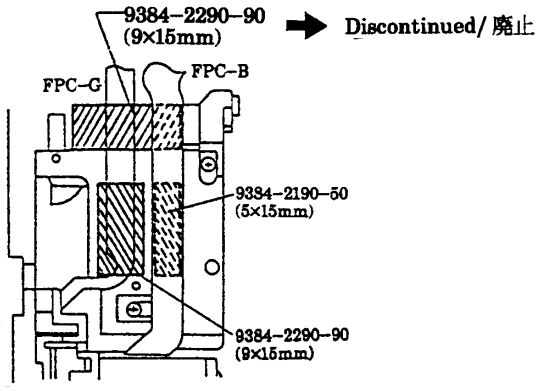

■本案内に従い、パーツリストへ転記等、メンテナンスを行って下さい。
According to this list, correct "Part List" in Service Manual for effective parts management.

MINOLTA CO.,LTD.

管理 No. REF No.	10-2151-005

PARTS MODIFICATION LIST

■No. 005 Parts List P. 7 2092-511

変更理由 REASON	粘着強度の向上 To improve adhesion			共通機種 COMMON MODEL	2151 Series	
Previous	9384-2290-90	→○	×←	9384-2391-30		New

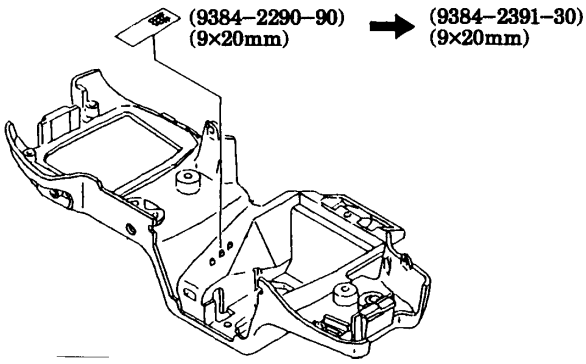

■本案内に従い、パーツリストへ転記等、メンテナンスを行って下さい。
According to this list, correct "Part List" in Service Manual for effective parts management.

MINOLTA CO.,LTD.

管理No. REF No.	QS FA 2155-P004

PARTS MODIFICATION LIST

■No. 004 Parts List P. 8 仮-686

変更理由 REASON	サービス用部品として供給 Added as a service part			共通機種 COMMON MODEL	2155 Series	
Previous	―――――――	――	――	(2017-0493-03)		New

P. 6

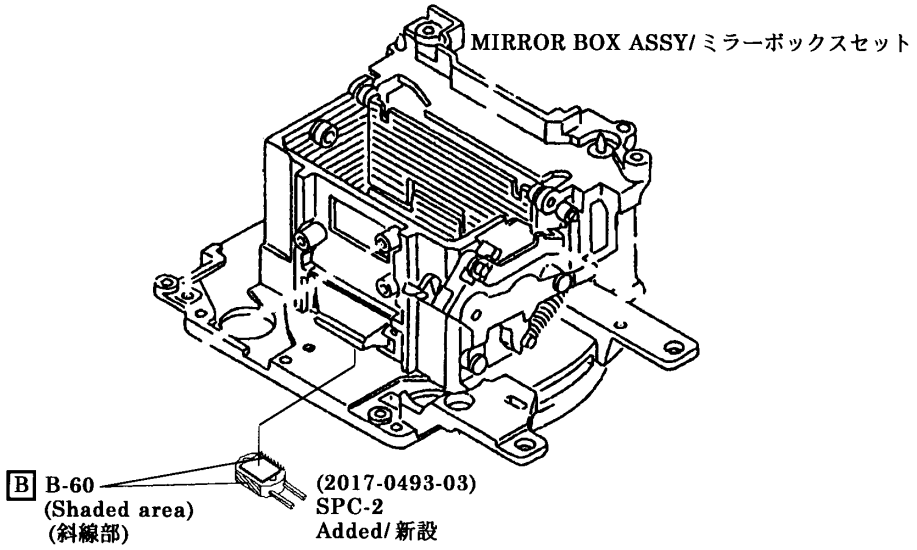

- SPC-2 #2017-0493-03 is applicable to these models; 2081, 2082, 2084, 2085, 2087, 2089, 2092, 2093, 2094, 2095, 2096, 2097, 2099, 2151, 2152, 2153, 2154, 2155.
- This PML for 2155 represents all models.
- Application availability is unknown to other models than above.
- SPC-2 (2017-0493-03)は以下の機種で共通使用可能です。
  但し、PMLは2155のみでの発行とします。
  2081, 2082, 2084, 2085, 2087, 2089, 2092, 2093, 2094, 2095, 2096, 2097, 2099, 2151, 2152, 2153, 2154, 2155.
- 上記機種以外では、未調査です。

■本案内状に従い、パーツリストへの転記等、メンテナンスを行なってください。
According to this list, correct "Parts List" in Service Manual for effective parts management.

MINOLTA CO.,LTD.

管理 No. REF No.	10-2151-006

PARTS MODIFICATION LIST

■No. 006 Parts List P. 2 2092-437

変更理由 REASON	生産都合 / For efficient production			共通機種 COMMON MODEL	2151 Series	
Previous	2092-0201-01	→ —	— ←	2092-0201-01		New

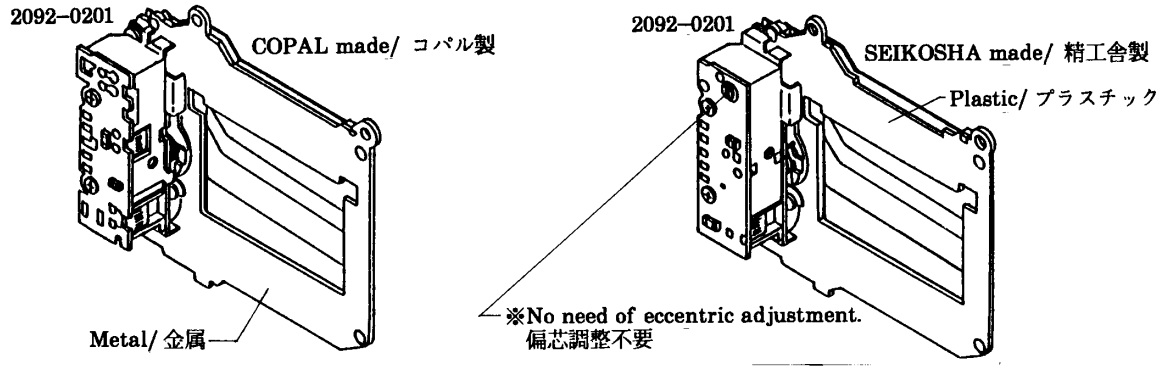

- 2 種類のシャッターがありますが互換性はあります。
- There are two types of Shutter Unit #2092-0201-01.
  They are interchangeable.

管理 No. REF No.	10-2151-007

■No. 007 Parts List P. 6 2092-503

変更理由 REASON	ねじ締めつけによる浮き防止 / To secure screw			共通機種 COMMON MODEL	2151 Series	
Previous	2092-2703-01	→○	× ←	2092-2703-02		New

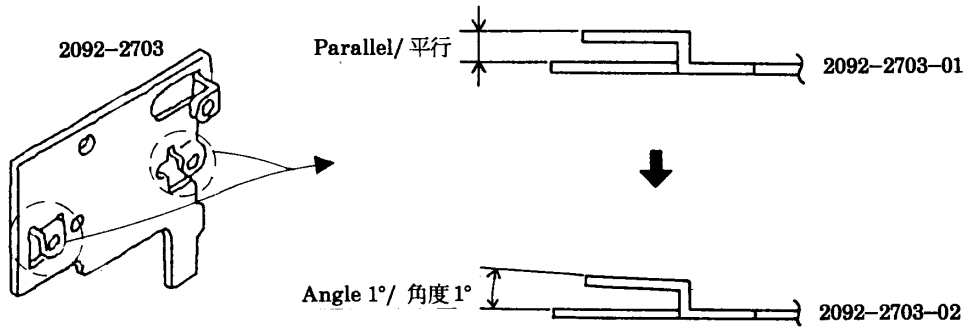

- パノラマタイプは -02 を使用のこと、パノラマタイプ以外は -01, -02 どちらも使用できます。
- 部品の見分けが付きにくいため、部品 No. で管理して下さい。
- For panorama models, use the type -02 exclusively.
  For other models, use either type.
- Arrange type -01 and -02 carefully because they are hard to be distinguished.

■本案内に従い、パーツリストへ転記等、メンテナンスを行って下さい。
According to this list, correct "Part List" in Service Manual for effective parts management.

MINOLTA CO.,LTD.

管理 No. REF No.	10-2151-008

PARTS MODIFICATION LIST

■No. 008 Parts List P. 6 2092-515

変更理由 REASON	F ゴミ及び、はがれの改善 To prevent floating and viewfinder stain			共通機種 COMMON MODEL	2151-600
Previous	2092-2721-01	→○	×←	2097-2721-01	New

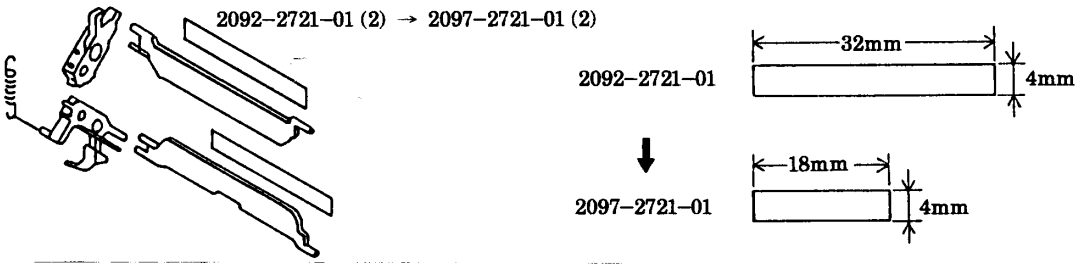

管理 No. REF No.	10-2151-009

■No. 009 Parts List P. 2 2092-533

変更理由 REASON	生産都合 For efficient production			共通機種 COMMON MODEL	2151 Series
Previous	2078-3030-01	→--	--←	2078-3030-01	New

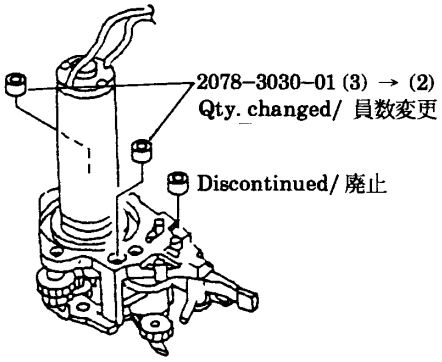

■本案内に従い、パーツリストへ転記等、メンテナンスを行って下さい。
According to this list, correct "Part List" in Service Manual for effective parts management.

MINOLTA CO.,LTD.

管理 No. REF No.	QS FA 2151-P010

PARTS MODIFICATION LIST

■No. 010 Parts List P. 1 仮501

変更理由 REASON	管理 No. のみ変更 Change in parts No.			共通機種 COMMON MODEL	2092, 2420, 2428, 2429, 2151
Previous	2092-1061-02	→○	○←	2440-1993-01	New
Previous	2420-1993-01				
Previous	2428-1991-01				
Previous	2429-1993-01				

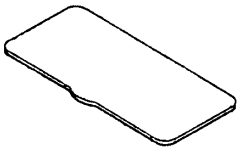

OSAKA JAPAN
MADE IN MALAYSIA

管理 No. REF No.	QS FA 2151-P011

■No. 011 Parts List P. 1 2440-80

変更理由 REASON	生産都合 For efficient production			共通機種 COMMON MODEL	2092, 2420, 2428, 2429, 2151
Previous	2440-1993-01	→○	○←	2440-1993-02	New

2440-1993-01

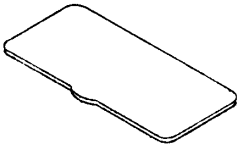

黒色 /Black

OSAKA JAPAN
MADE IN MALAYSIA

2440-1993-02

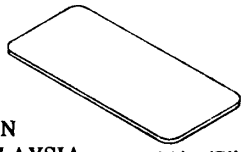

銀色 /Silver

■本案内に従い、パーツリストへ転記等、メンテナンスを行って下さい。
According to this list, correct "Part List" in Service Manual for effective parts management.

MINOLTA CO.,LTD.

管理 No. REF No.	QS FA 2151-P012

PARTS MODIFICATION LIST

■No. 012 Parts List P. 1 仮502

変更理由 REASON	管理 No. のみ変更 Change in parts No.			共通機種 COMMON MODEL	2089, 2092, 2097, 2151, 2099, 2420, 2428
Previous	2089-1060-01	→○	○←	2440-1991-02	New
Previous	2092-1060-01				
Previous	2097-1060-01				
Previous	2099-1060-01				
Previous	2420-1991-01				
Previous	2428-1991-01				

JAPAN

管理 No. REF No.	QS FA 2151-P013

■No. 013 Parts List P. 1 2440-80

変更理由 REASON	生産都合 For efficient production			共通機種 COMMON MODEL	2089, 2092, 2097, 2151, 2099, 2420, 2428
Previous	2440-1991-02	→○	○←	2440-1991-03	New

2440-1991-02

黒色 /Black

JAPAN

2440-1991-03

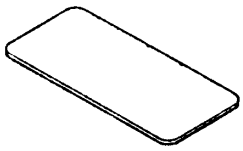

銀色 /Silver

■本案内に従い、パーツリストへ転記等、メンテナンスを行って下さい。
According to this list, correct "Part List" in Service Manual for effective parts management.

MINOLTA CO.,LTD.

管理 No. REF No.	QS FA 2151-P014

PARTS MODIFICATION LIST

■ No. 014 Parts List P. 2, 3 2151-546

変更理由 REASON	異音防止 / To reduce noise	共通機種 COMMON MODEL	2151 Series

Previous	2151-3014-02	→×	×←	2151-3014-03	New

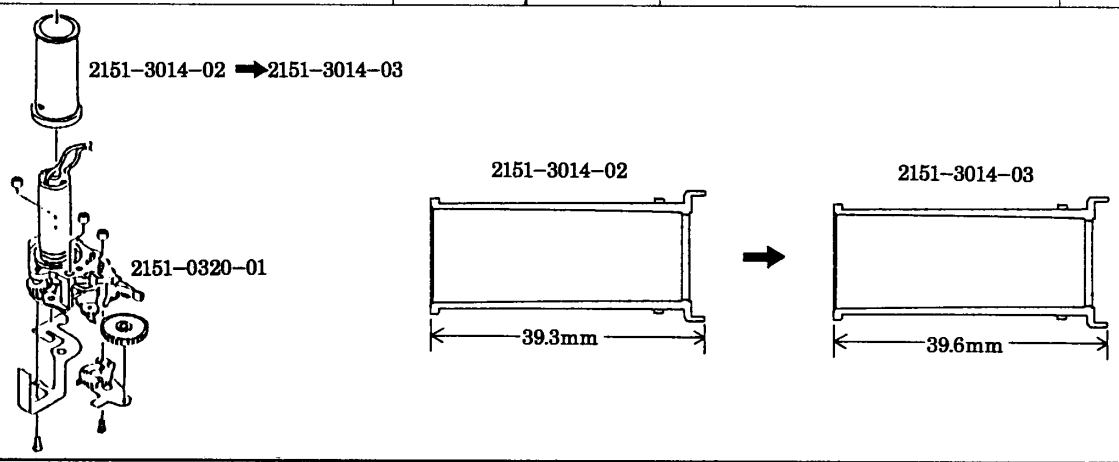

(P. 2)

Previous	2151-3056-02	→--	--←	----------	New

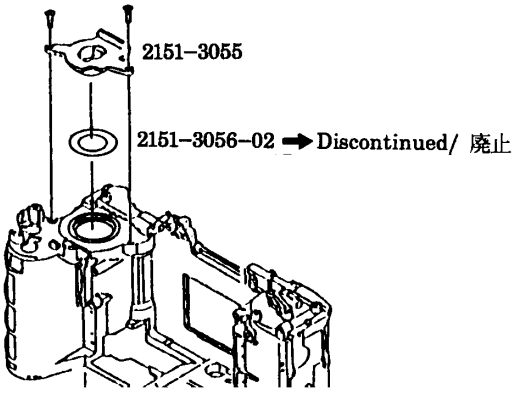

(P. 3)

- 2151-3014-02 を使用する場合は、2151-3056-02 といっしょに使用して下さい。
- 2151-3014-03 を使用する場合は、2151-3056-02 は不要です。
- #2151-3014-02 requires #2151-3056-02.
- #2151-3014-03 doesn't require #2151-3056-02.

セットでの互換性 /Interchangeability as a set	Previous	→○	○←	New

■本案内に従い、パーツリストへ転記等、メンテナンスを行って下さい。
According to this list, correct "Part List" in Service Manual for effective parts management.

MINOLTA CO.,LTD.

管理 No. REF No.	QS FA 2151-P015

PARTS MODIFICATION LIST

■No. 015 Parts List P. 4 仮-521

変更理由 REASON	生産都合 For efficient production	共通機種 COMMON MODEL	2151 Series

Previous	2151-0580-01	→×	×←	2151-0581-01	New
Previous	(2151-5805-01)	→--	--←	2151-5805-01	New

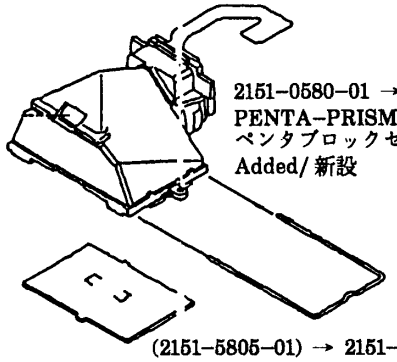

2151-0580-01 → 2151-0581-01
PENTA-PRISM ASSY
ペンタブロックセット
Added/ 新設

(2151-5805-01) → 2151-5805-01

- #0581 doesn't include #5805 as an unit, but it initially has a nonconformable #5805 for the sake of dust proof. Be sure to replace the nonconformable #5805 before using #0581.
- 0580 の構成から、5805 が外れた部品が 0581 です。
  但し、防塵のためキズの付いた焦点板が付いています、0581 を使用する場合、焦点板を交換して使用して下さい。

セットでの互換性 /Interchangeability as a set	Previous	→○	○←	New

■本案内に従い、パーツリストへ転記等、メンテナンスを行って下さい。
According to this list, correct "Part List" in Service Manual for effective parts management.

MINOLTA CO.,LTD.

管理 No. REF No.	QS FA 2151-P016

PARTS MODIFICATION LIST

■No. 016 Parts List P. 6 2092-546, 547

変更理由 REASON	生産都合 For efficient production			共通機種 COMMON MODEL	2151-100, -200
Previous	2092-2703-02	→ --	-- ←	----------	New
Previous	9747-1730-07	→ --	-- ←	----------	New
Previous	9384-2290-90	→ --	-- ←	----------	New
Previous	9384-2190-50	→ --	-- ←	9384-2190-50	New
Previous	9384-2391-30	→ --	-- ←	9384-2391-30	New

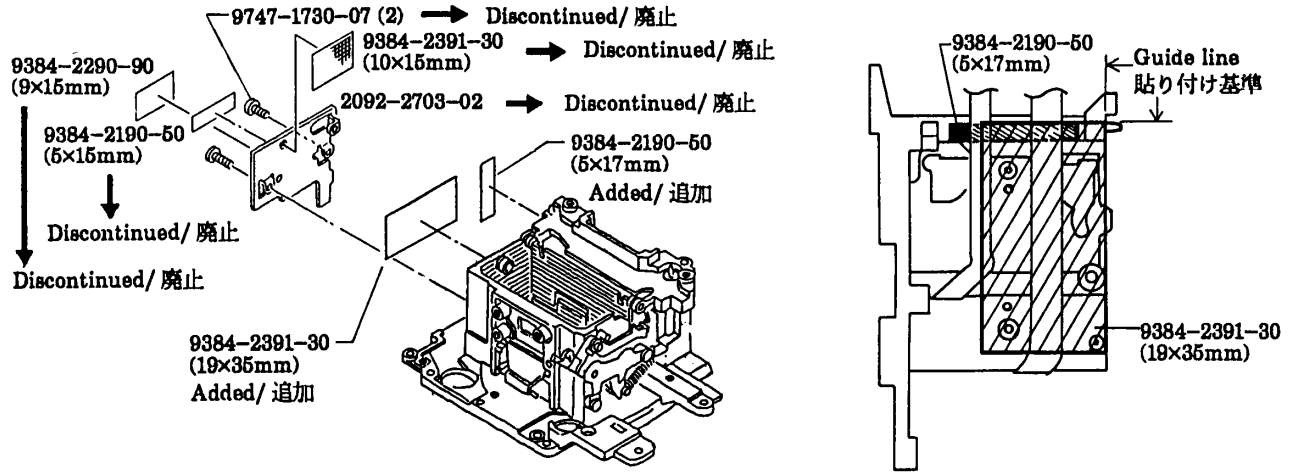

■本案内に従い、パーツリストへ転記等、メンテナンスを行って下さい。
According to this list, correct "Part List" in Service Manual for effective parts management.

MINOLTA CO.,LTD.

管理 No. REF No.	QS FA 2151-P017

PARTS MODIFICATION LIST

■No. 017 Parts List P. 7 2151-568

変更理由 REASON	スパーク対策 To prevent spark	共通機種 COMMON MODEL	2092 Series

Previous	2151-1601-01	→--	--←	2151-1601-01	New

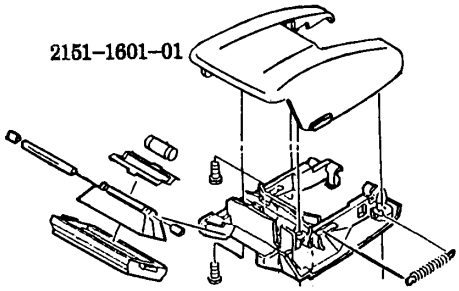

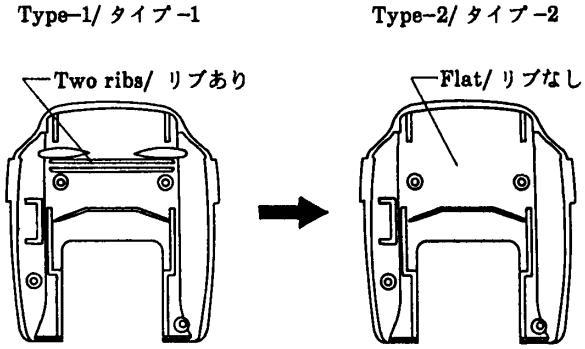

Previous	----------	→--	--←	2092-4504-01	New

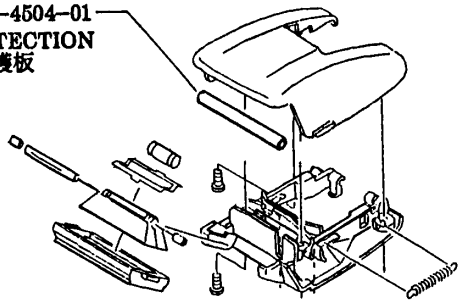

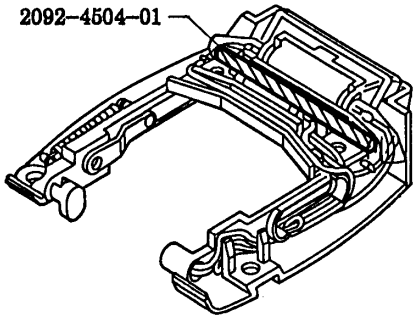

• #2092-4504-01 is not needed for type-1 of #2151-1601-01.
• 2151-1601-01 がタイプ-1 の場合、2092-4504-01 は不要です。

セットでの互換性 /Interchangeability as a set	Previous	→○	○←	New

■本案内に従い、パーツリストへ転記等、メンテナンスを行って下さい。
According to this list, correct "Part List" in Service Manual for effective parts management.

MINOLTA CO.,LTD.

管理 No. REF No.	QS FA 2151-P018

PARTS MODIFICATION LIST

■No. 018 Parts List P. 2 2092-534

変更理由 REASON	生産都合 For efficient production	共通機種 COMMON MODEL	2151 Series

Previous	2092-0455-01	→ ---	--- ←	2092-0455-01	New

2092-0455-01

Type-1/ タイプ-1

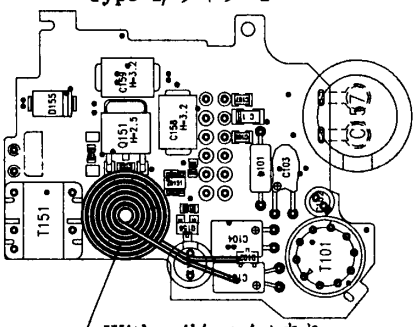

With coil/ コイルあり

Type-2/ タイプ-2

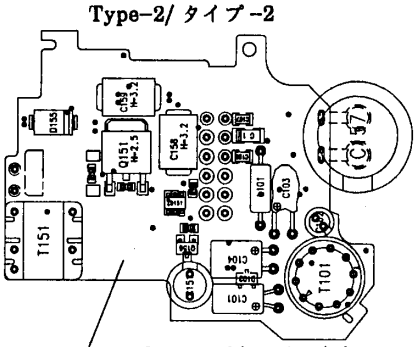

Without coil/ コイルなし

- Type-1 and -2 are interchangeable. Only the type-1 is a service part.
- The type-2 is not applicable to #2753 or #2754.
- タイプ-1、タイプ-2 は互換性あり、サービス供給はタイプ-1 のみです。
- 但し、2753, 2754 にタイプ-2 は使用できません。

■本案内に従い、パーツリストへ転記等、メンテナンスを行って下さい。
According to this list, correct "Part List" in Service Manual for effective parts management.

MINOLTA CO.,LTD.

管理 No. REF No.	QS FA 2151-P019

PARTS MODIFICATION LIST

■No. 019 Parts List P. 6

変更理由 REASON	生産都合 For efficient production			共通機種 COMMON MODEL	2151-100, -200
Previous	9384-2190-50	→○	×←	9384-2190-60	New
Previous	9384-2391-30	——	——	9384-2391-30	New

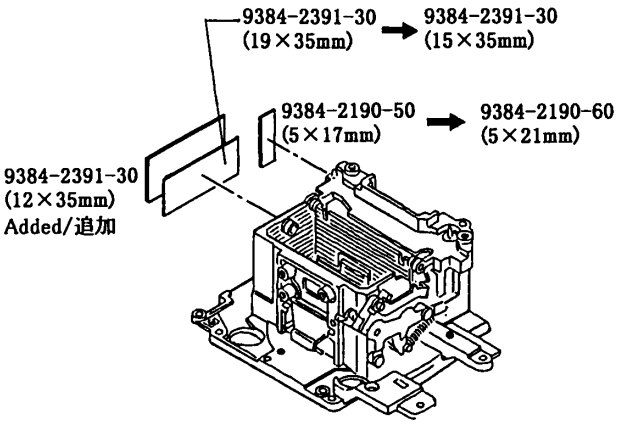

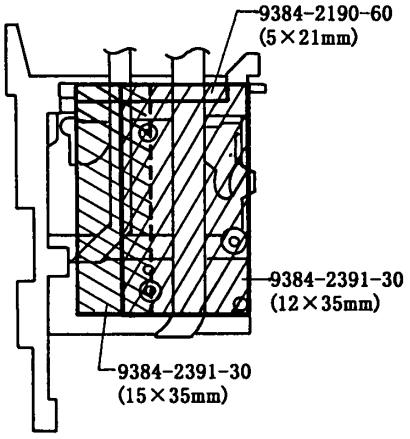

管理 No. REF No.	QS FA 2151-P020

■No. 020 Parts List P. 4

変更理由 REASON	生産都合 For efficient production			共通機種 COMMON MODEL	2151 Series
Previous	————	——	——	9384-2391-20	New

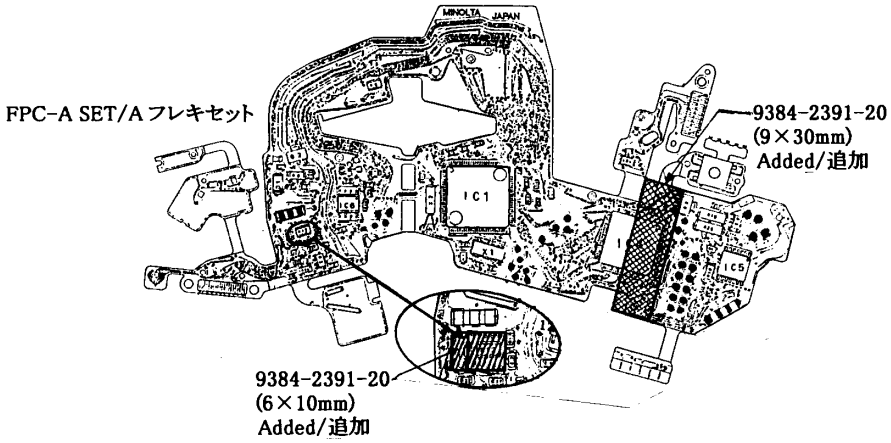

■本案内状に従い、パーツリストへの転記等、メンテナンスを行なって下さい。
According to this list, correct "Parts List" in Service Manual for effective parts management.
MINOLTA CO., LTD.

管理 No. REF No.	QS FA 2151-P021

PARTS MODIFICATION LIST

■No. 021 Parts List P. 4 仮-599

変更理由 REASON	工程変更による単品展開 Single supply due to process change			共通機種 COMMON MODEL	2151 Series	
Previous	————	——	——	2092-4512-04		New

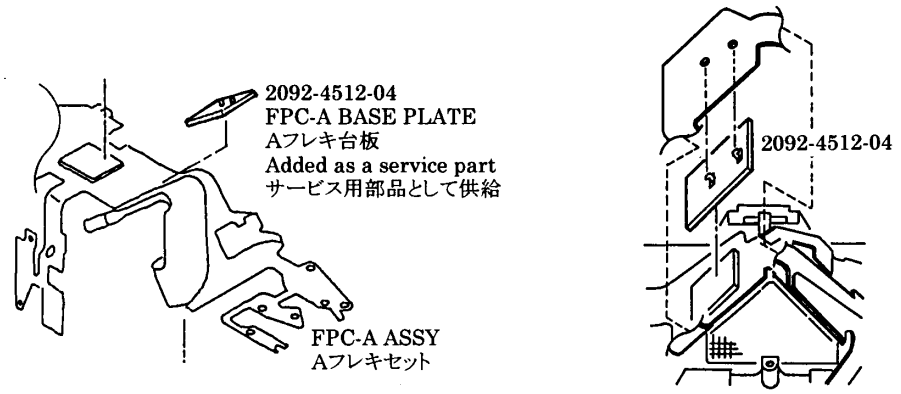

■本案内状に従い、パーツリストへの転記等、メンテナンスを行なって下さい。
According to this list, correct "Parts List" in Service Manual for effective parts management.
MINOLTA CO., LTD.

管理 No. REF No.	QS FA 2151-P022

PARTS MODIFICATION LIST

■No. 022 Parts List P. 2 仮-636

変更理由 REASON	サービス用部品として供給 Added as a service part			共通機種 COMMON MODEL	2151 Series
Previous	————	——	——	9362-5362-41	New

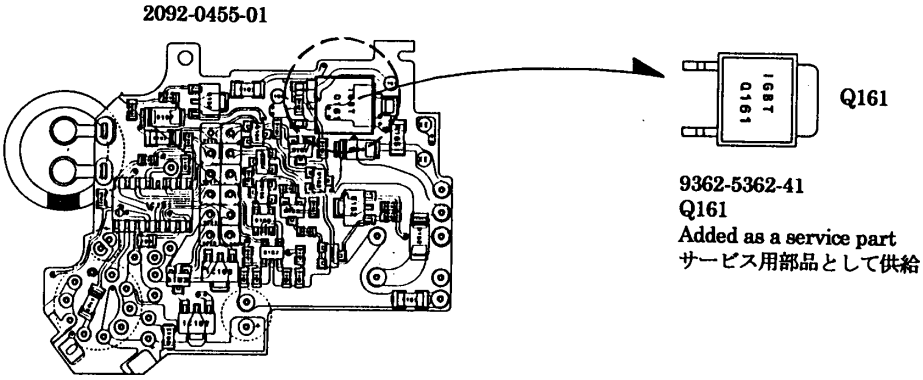

■本案内状に従い、パーツリストへの転記等、メンテナンスを行なって下さい。
According to this list, correct "Parts List" in Service Manual for effective parts management.
MINOLTA CO., LTD.

管理 No. REF No.	QS FA 2151-P023

PARTS MODIFICATION LIST

■No. 023 Parts List P. 2 2151-550、-551

変更理由 REASON	コストダウン To reduce cost			共通機種 COMMON MODEL	2151 Series
~~Previous~~	2092-0455-01	→○	○←	2092-0452-01	New

2092-0455-01

2092-0452-01
FLASH CONVERTER PCB ASSY
フラッシュコンバーター基板セット
Added/新設

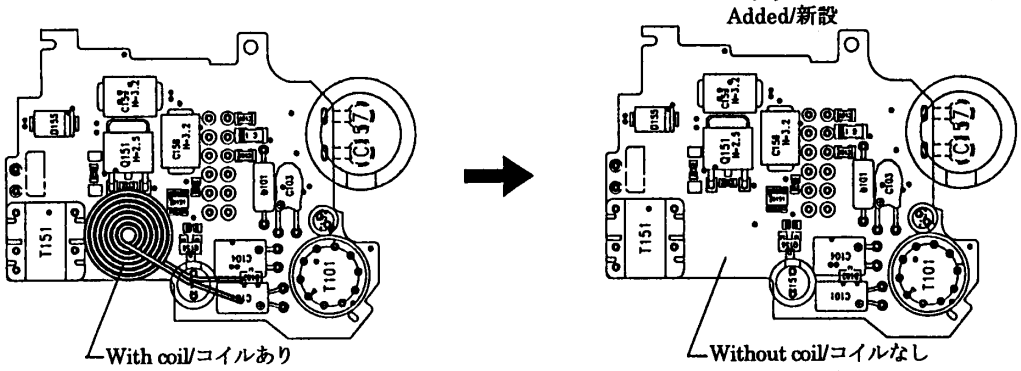

・The type-1 of #2092-0455-01 on PML QS FA 2092-P058, 2151-P018 is no longer available.
The type-2 of #2092-0455-01 is now available with parts No. #2092-0452-01.
・PML QS FA 2092-P058, 2151-P018 で案内している 2092-0455-01 のタイプ-1 が供給不可となり、タイプ-2 を 2092-0452-01 として供給します。

■本案内状に従い、パーツリストへの転記等、メンテナンスを行なって下さい。
According to this list, correct "Parts List" in Service Manual for effective parts management.
MINOLTA CO., LTD.

管理No. REF No.	QS FA 2151-P024

PARTS MODIFICATION LIST

■No. 024 Parts List P. 3 2092-617

変更理由 REASON	電池接触面の改善 To improve battery contact efficiency	共通機種 COMMON MODEL	2151 Series

Previous	2092-1211-01	→×	×←	2092-1211-02	New

2092-1211-01

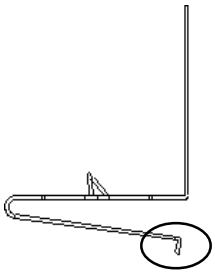

2092-1211-02

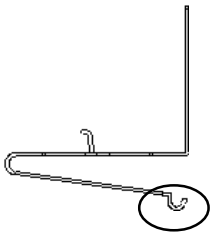

Previous	2082-1212-08	→×	×←	2082-1212-09	New

2082-1212-08

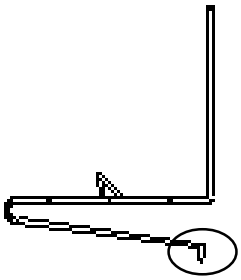

2082-1212-09

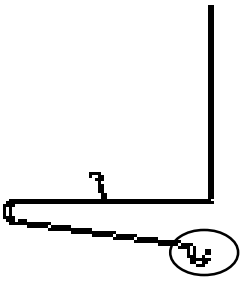

Interchangeability as a set/セットでの互換性	Previous	→○	×←	New

■本案内状に従い、パーツリストへの転記等、メンテナンスを行なってください。
According to this list, correct "Parts List" in Service Manual for effective parts management.

MINOLTA CO.,LTD.

管理No. REF No.	QS FA 2151-P025

PARTS MODIFICATION LIST

■No. 025 Parts List P. 4 仮-688

変更理由 REASON	手配都合 For efficient parts supply			共通機種 COMMON MODEL	2151 Series	
Previous	―――――――	――	――	(9366-4061-01)		New

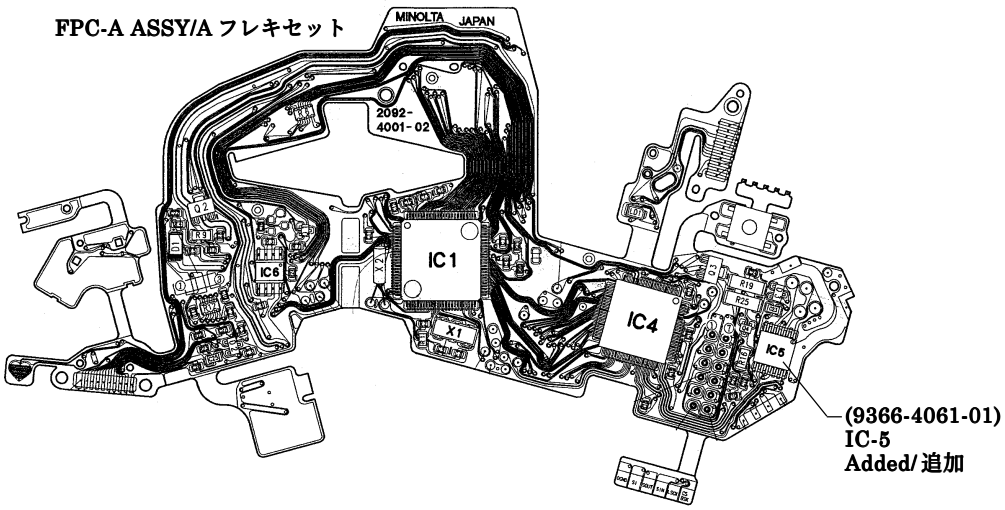

■本案内状に従い、パーツリストへの転記等、メンテナンスを行なってください。
According to this list, correct "Parts List" in Service Manual for effective parts management.

MINOLTA CO.,LTD.

管理No. REF No.	QS FA 2151-P026

PARTS MODIFICATION LIST

■No. 026 Parts List P. 6 仮-690

変更理由 REASON	サービス用部品として供給 Added as a service part			共通機種 COMMON MODEL	2151 Series
Previous	―――――――	――	――	(2092-5112-02)	New

MIRROR BOX ASSY
ミラーボックスセット

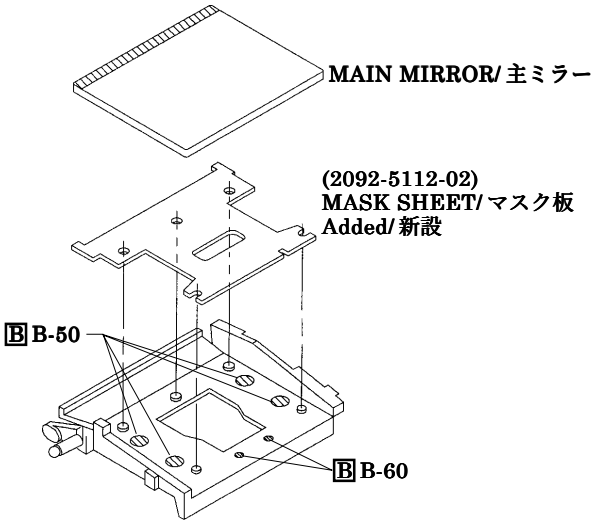

■本案内状に従い、パーツリストへの転記等、メンテナンスを行なってください。
According to this list, correct "Parts List" in Service Manual for effective parts management.

MINOLTA CO.,LTD.

管理No. REF No.	QS FA 2151-P027

PARTS MODIFICATION LIST

■No. 027 Parts List P. 2 仮-700 SUPPLEMENTARY INFORMATION No. 2092-005

変更理由 REASON	サービス部品として供給 Added as service parts			共通機種 COMMON MODEL	2151 Series
Previous	————	——	——	(2092-0308-01)	New
Previous	————	——	——	(2151-0312-01)	New
Previous	————	——	——	(2151-3001-04)	New
Previous	————	——	——	(2151-3002-02)	New
Previous	————	——	——	(2151-3003-02)	New
Previous	————	——	——	(9791-1840-40)	New

※ For assembly procedure except for the Fig box, see No. 2092-005, SUPPLEMENTARY INFORMATION.
※ Fig. 以外の組立て要領は、サプリメンタリーインフォメーション No.2092-005 を参照してください。

■ Fig.

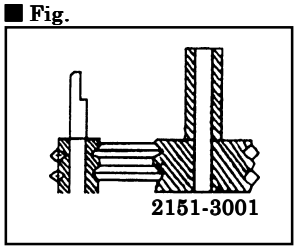

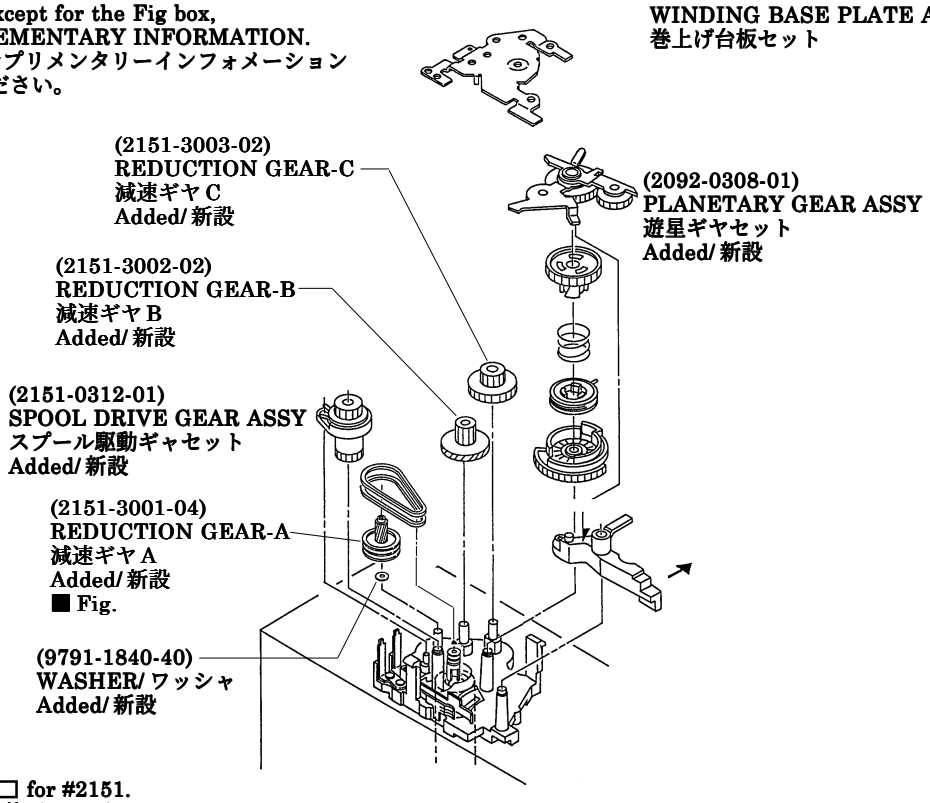

※ Use the parts marked ▭ for #2151.
※ #2151 では ▭ の部品を使用して下さい。

PLANETARY GEAR ASSY 遊星ギヤセット	SPOOL DRIVE GEAR ASSY スプールギヤセット	REDUCTION GEAR-A 減速ギヤA	REDUCTION GEAR-B 減速ギヤB	REDUCTION GEAR-C 減速ギヤC
2092-0308-01		2092-3001-03 色：青 Color:Blue	2092-3002-04 φ 2.3 色：赤 Color:Red 歯数：31 Number of teeth:31	
	2151-0312-01 歯数：14 Number of teeth:14	2151-3001-04 色：黒 Color:Black	2151-3002-02 φ 2.6 歯数：32 Number of teeth:32	2151-3003-02 色：黒 Color:Black 歯数：31 Number of teeth:31
2153-0308-01 穴 Hole	2153-0312-01 歯数：13 Number of teeth:13	2153-3001-01	2153-3002-01 φ 2.3 色：黒 Color:Black 歯数：25 Number of teeth:25	2153-3003-02 色：灰 Color:Gray 歯数：25 Number of teeth:25

管理No. REF No.	QS FA 2151-P028

PARTS MODIFICATION LIST

■No. 028 Parts List P. 4 仮-710

変更理由 REASON	サービス用部品として供給 Added as a service part			共通機種 COMMON MODEL	2151 Series	
Previous	2151-0408-01	−−	−−	2151-0408-01		New
Previous	−−−−−−−	−−	−−	(9373-4164-01)		New

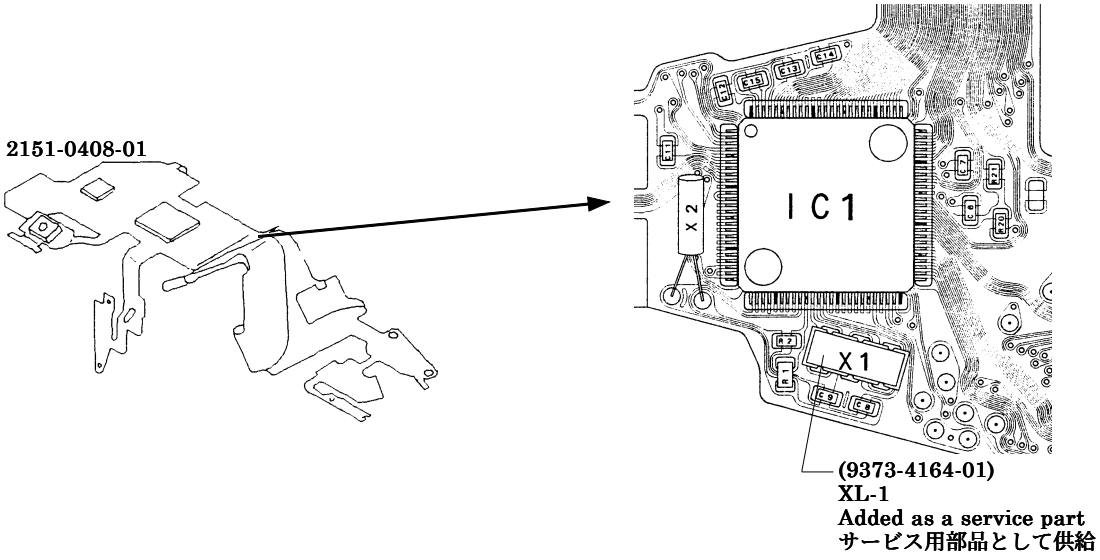

REF No. 管理No.	QS FA 2151-P029

PARTS MODIFICATION LIST

Division 主管部署	Camera Service Division カメラサービス部
Valid from 施行年月日	April 11. 2002

Approved by	Verified by	Written by
岩崎	岡本	作成

Parts List P. 4 SUPPLEMENTARY INFORMATION QS FA 2151-S01E/J 仮-780

REASON 変更理由	手配都合 For efficient part supply			COMMON MODEL 共通機種	2151 Series
Previous	2151-0581-01	→×	×←	2154-0580-01	New
Previous	2092-5013-03	→×	×←	2153-5013-01	New
Previous	————	——	——	9391-0807-□□	New
Previous	————	——	——	9394-2290-90	New

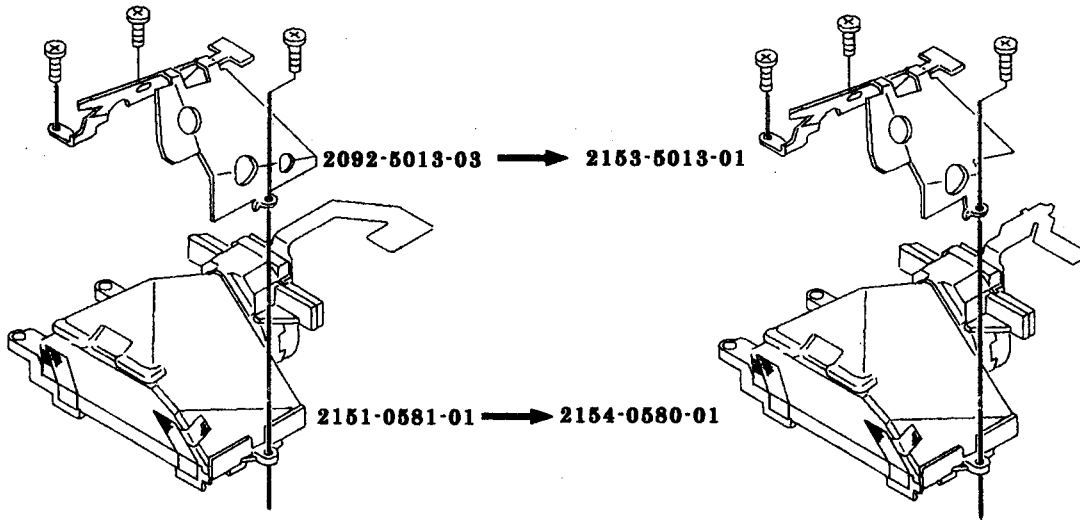

When replacing #2151 Penta Prism Assy (#2151-0581) with #2154 Penta Prism Assy (#2154-0580-01), remodel FPC-SPC Assy of #2154 Penta Prism Assy for FPC-SPC Assy of #2151 referring to SERVICE MANUAL SUPPLEMENTARY INFORMATION QS FA 2151-S01E.
2151と2154のペンタブロックセットではフレキが異なります、サプリメンタリーインフォメーションQS FA 2151-S01E/Jを参照し、素子を取外しジャンプ線および絶縁で対応して下さい。

Interchangeability as a set/セットでの互換性	Previous	→○	○←	New

PML

■本案内状に従い、パーツリストへの転記等、メンテナンスを行なってください。
According to this list, correct "Parts List" in Service Manual for effective parts management.

MINOLTA CO.,LTD.

Repair Guide

■Contents of this msnual are in accordance with the assembly procedure.
Therefore, follow the reverse procedure when disassembly.
■Refer to Wiring diagram on Parts List, page 9 for wiring.

■Symbols
■Cautions and keypoints
[G] : Grease
[B] : Adhesive
[T] : Tool

CONTENTS

Page
■Precautions 2–3
[1]Body Assembly 4–5
[2]Winding Base Assy Installation 6
[3]Mirror Box Assembly– I 7
■SREL timing adjustment 7
[4]Mirror Box Assembly– II 8–9
[5]Penta Prism Assy, FPC–A Assy Installation 10–11
[6]Mirror Box Assy Installation 12–13
■Lead wire arrangement 14
■Mechanical operation check 14
[7]External Parts Installation 15
■Top Cover Assy Assembly 16–17
■Back Cover Assy Assembly 18
■Adjustment/check required after repair 19
■Preparation Before Adjustment–1 20
■Body Back Adjustment– I 21
■Body Back Adjustment– II 22
■Viewfinder Back Adjustment 23
■Manual SS & X–Sync. Time–Lag Check 24
■AE Level Check 25
■Aperture Control Check 25
■Flash Level Check 26
■Manual Set SS Adjustment 27
■Aperture Preset Adjustment 28
■AE Adjustment 29
■Flash Level Adjustment 30
■Pre–Flash Level Adjustment 31
■Wireless Flash Level Adjustment 32
■B.C. Lock Voltage Adjustment 33
■LCD Displays Check 34
■Preparation Before Adjustment–2 (AF adjustment) 35
①AF Area Adjustment 36
②Pitch, Yaw Adjustment 37
③EZ Adjustment 38
■Error Code on HIT Controller 39
■Tools & Instruments 40
■Subsidiary materials 40

■ Precautions

■To discharge

- Before disassembly, be sure to discharge main condenser as in Fig. 1.

■Fig. 1

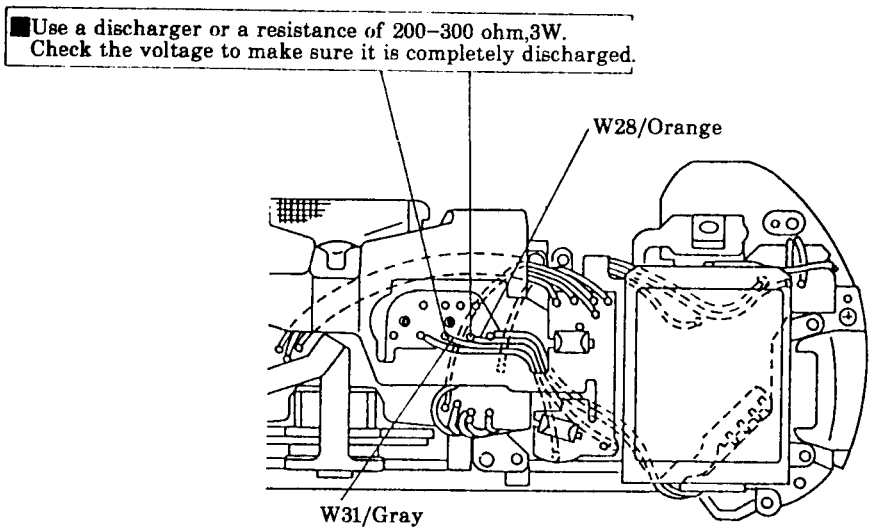

■To activate without Top Cover

- Solder indicated part–a on FPC–A Assy to short circuit.
- Replacement FPC–A Assy is initially short circuitted at the part–b.

  So when using the replacement FPC–A Assy, you don't need to short circuit the part–a.

※Be sure to unsolder the part–a, or to cut the part–b before installing Top Cover.

■Fig. 2

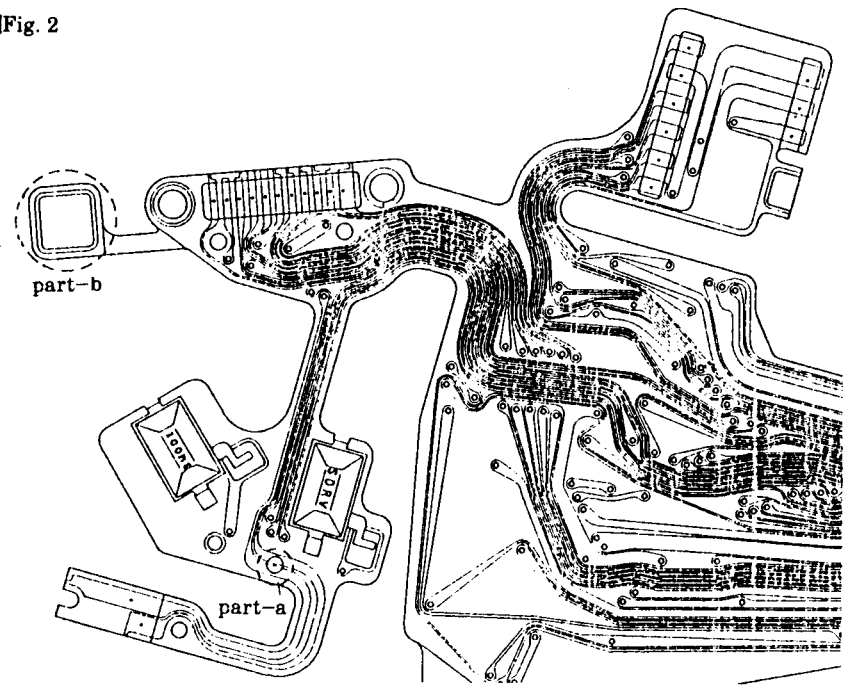

■Initial setting of FPC–A Assy is as follows.

- AF not available (remains in MF)
- No flash charge
- Shutter–release available without lens and with film

※These settings will be automatically cancelled after Flash Level Adjustment (P. 30).

■Precautions

■Chemicals

Handle chemicals of high volatility with care, use of which will affect to your health and the environment.

1. **Store them sealed in a specific place to prevent from exposure to a high temperature or direct sunlight.**
2. **Avoid dividing them into small containers and prevent from vaporization.**
3. **Keep containers sealed when not in use.**
4. **Avoid using them as much as possible. When required, remove only required amount from the container to make full use.**

■Plastic parts

1. **When cleaning the plastic parts, use cleaning paper or cloth.** Never use thinner, ketone, ether.
2. When installing the plastic parts, insert the specific screws vertically to the parts. (Be careful not to tighten too much.)

■PCBs

Since PCBs use MOS IC, you must reduce a static electricity. When repairing a PCB itself, or when wiring, please perform your work as illustrated above.
When grounding is impossible, connect the cable to a steel desk or shelf.

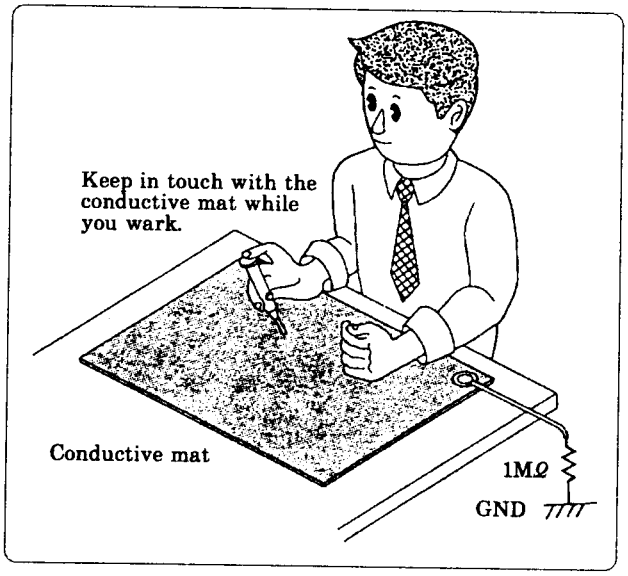

1 Body Assembly

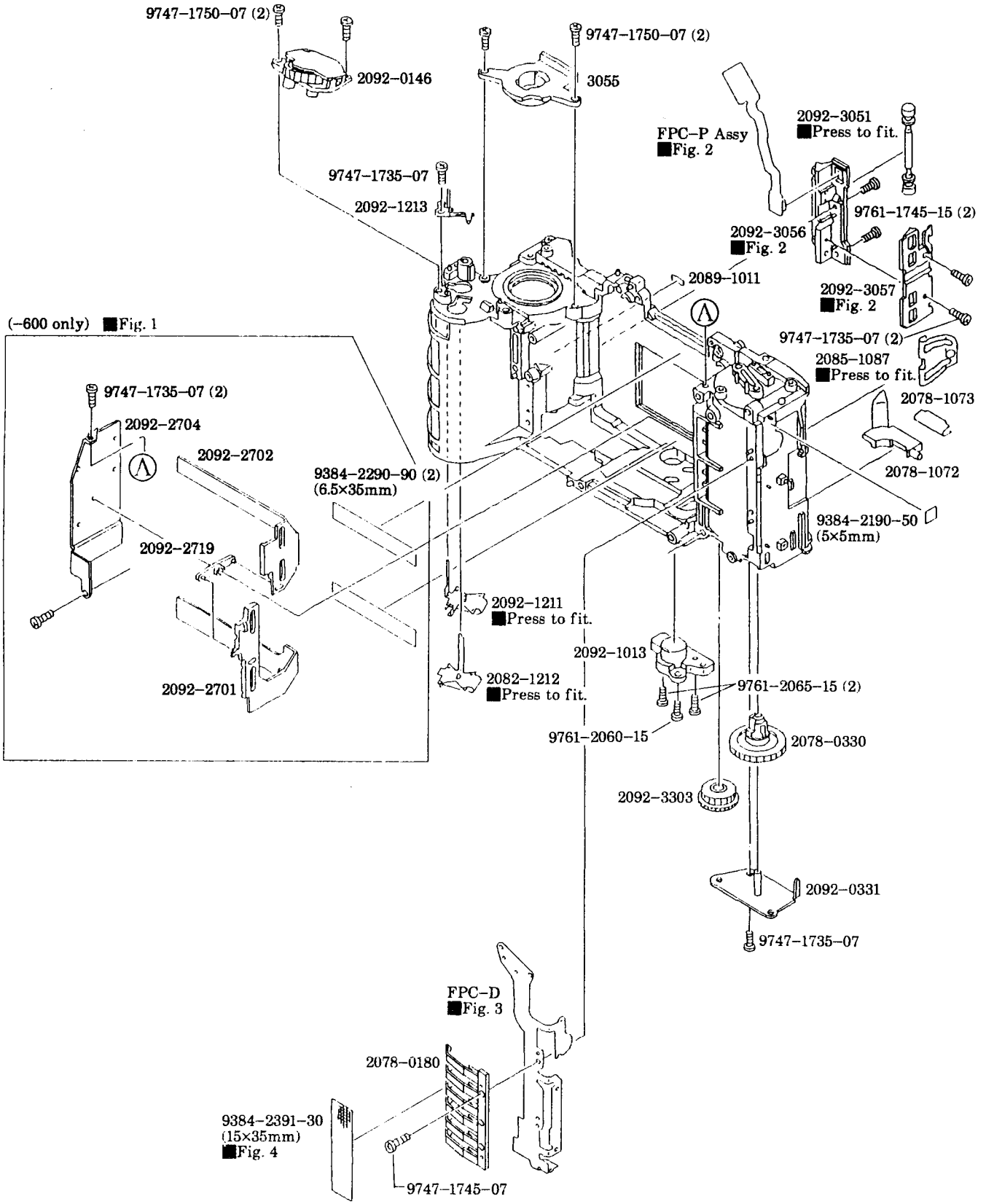

■Fig. 1 (-600 only)

• Fit 2092-2701, 2092-2702, 2092-2719 to posts on body.

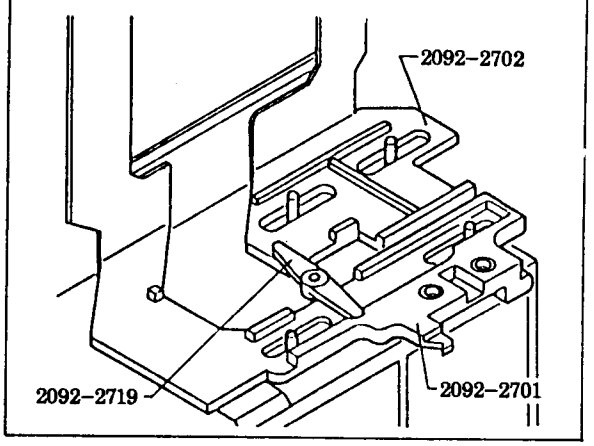

■Fig. 2

• Fit FPC-P Set to 2092-3056. While holding part ⓐ with part ⓑ, assemble 2092-3056 and 2092-3057 by fitting posts.

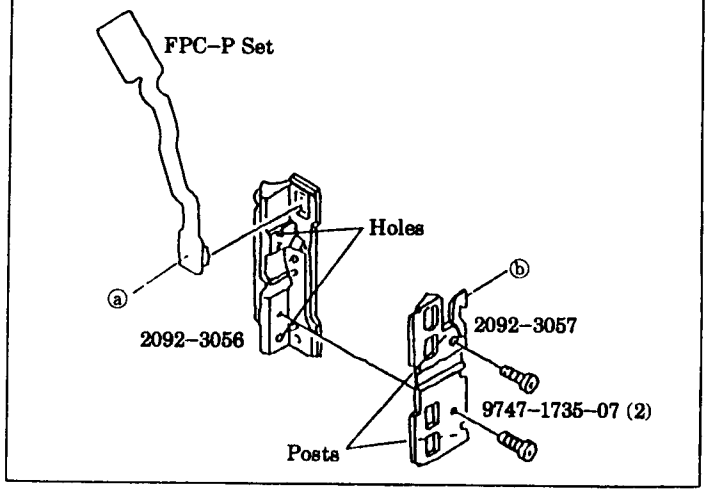

■Fig. 3

• Fit holes of FPC-D to posts on body to install.

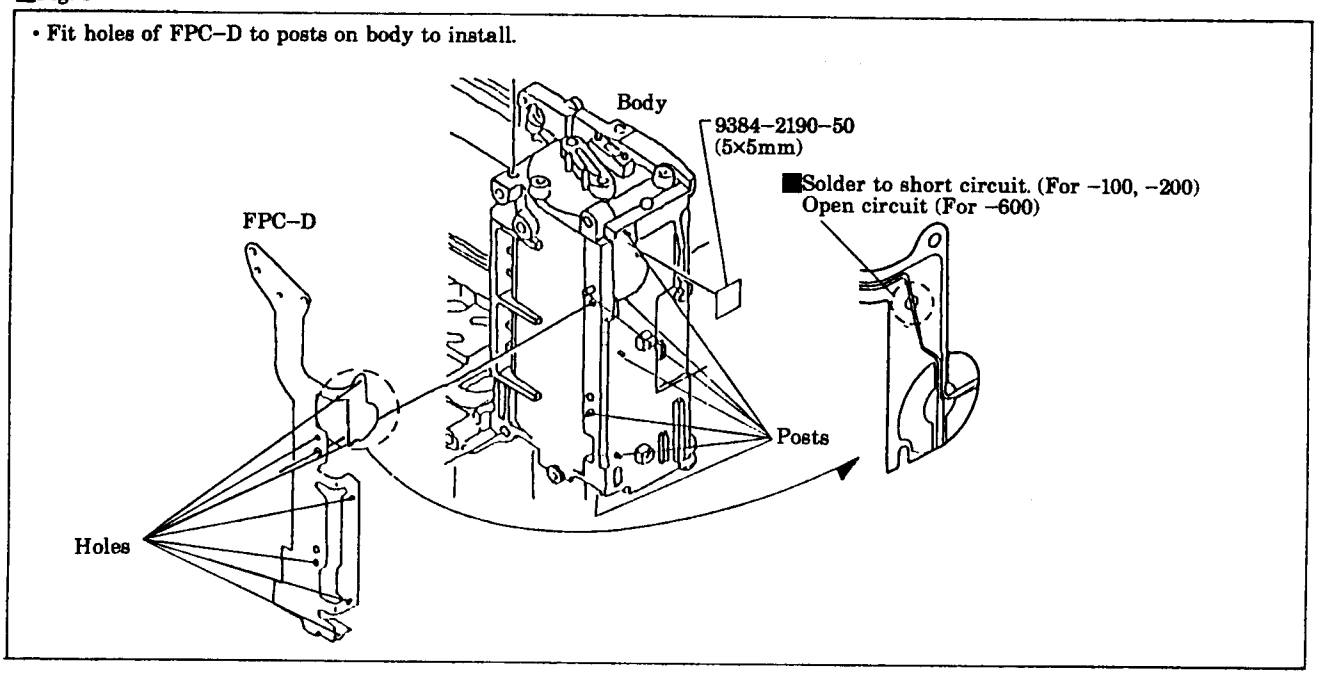

■Fig. 4

• Affix 9384-2391-30 to shaded area.

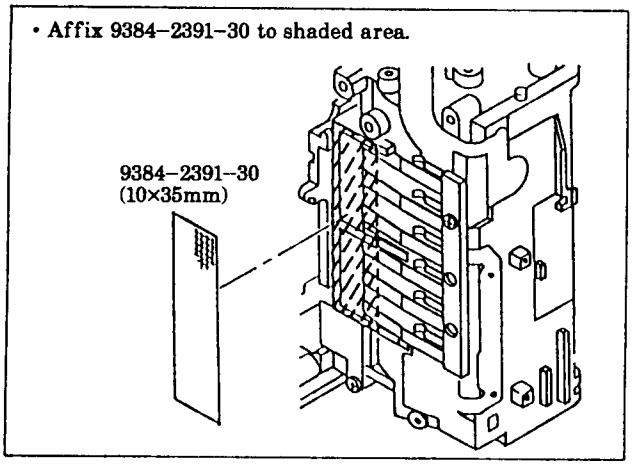

2 Winding Base Assy Installation

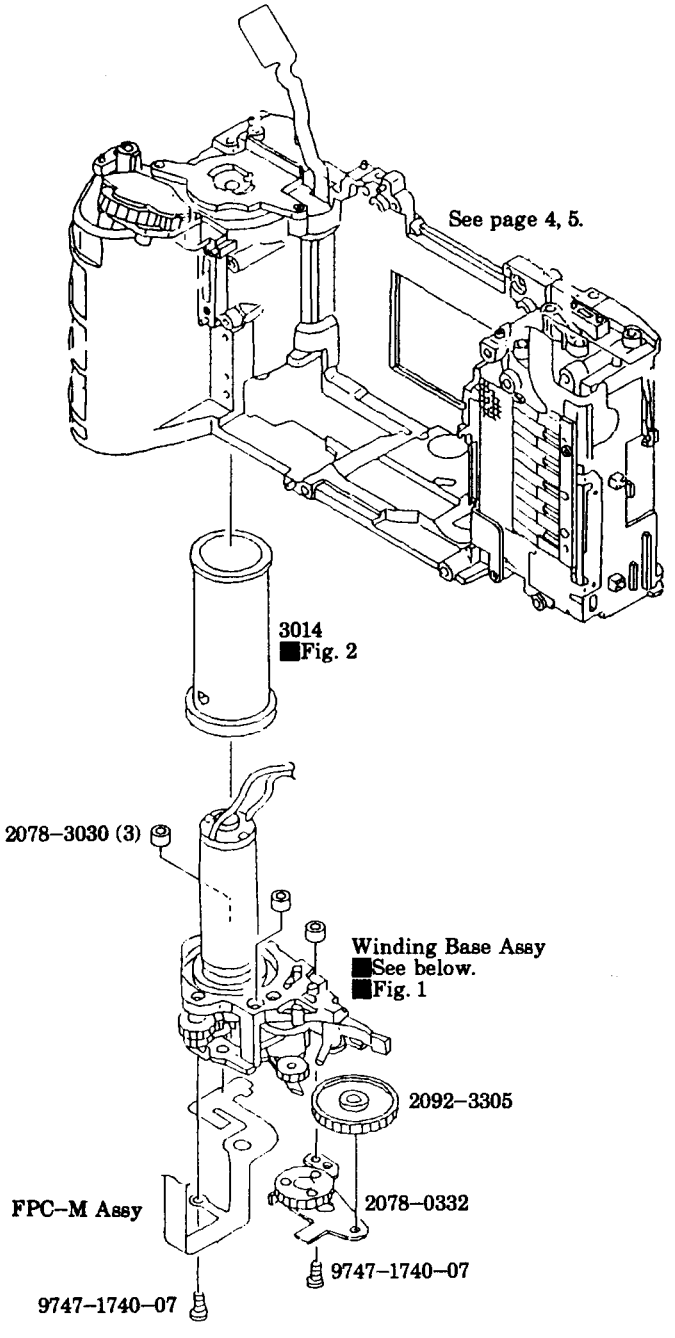

■Fig. 1

• Wire arrangement

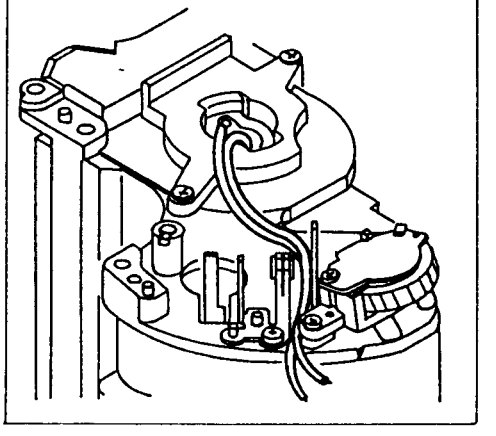

■Fig. 2

• Apply G–75 to shaded area.

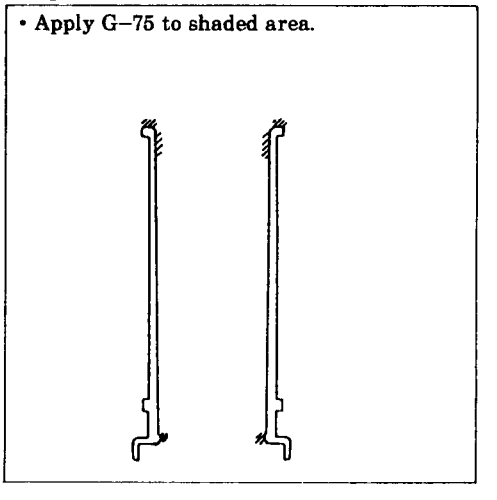

■How to install

1. Set Cam Gear to the indicated position so that Mirror Charge Lever is set to the position of arrow. (Fully engaged)
2. Install Winding Base Assy to the body.

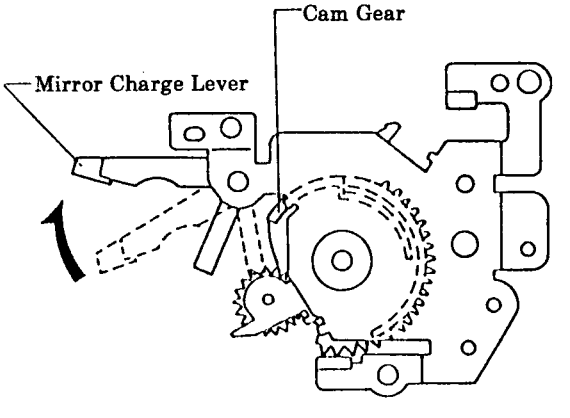

3 Mirror Box Assembly — I

■Install in the order of ① to ④.

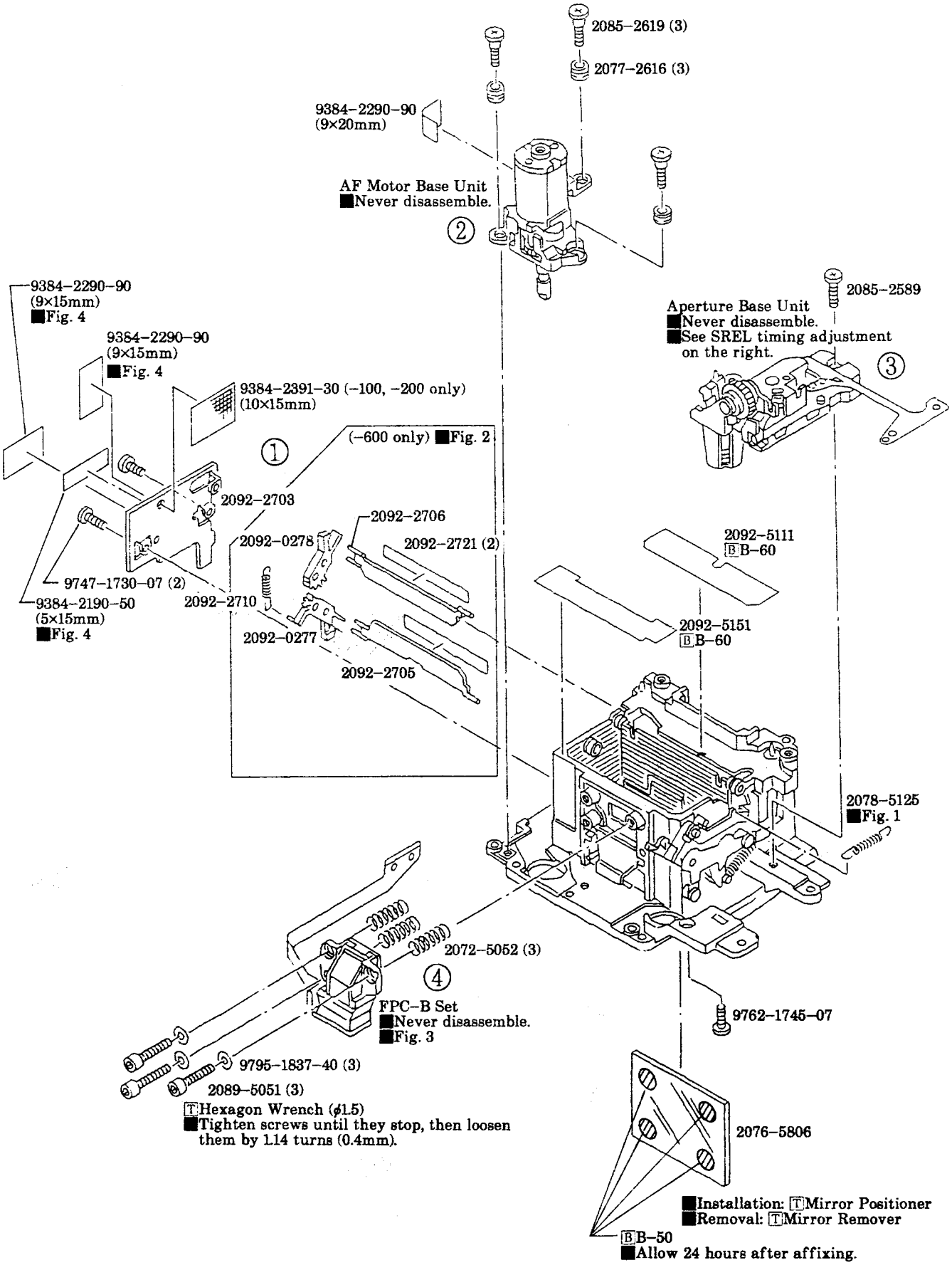

■Fig. 1

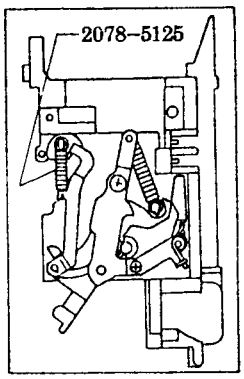

■Fig. 2

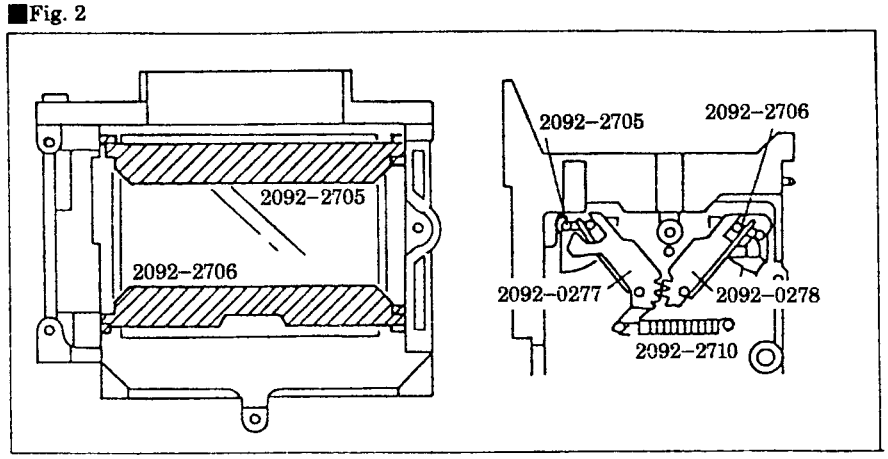

■Fig. 3

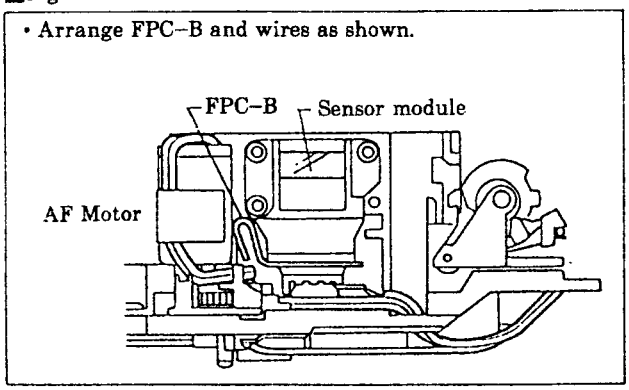

■Fig. 4

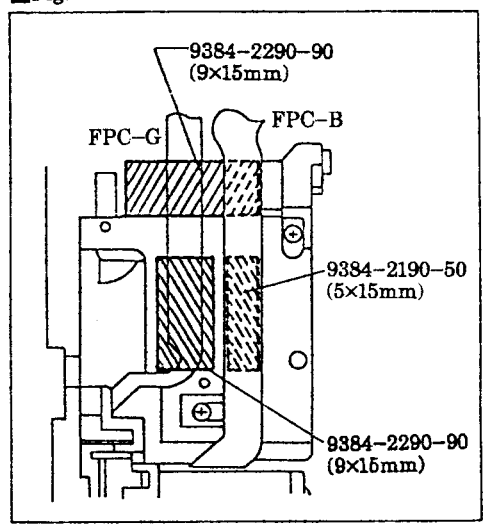

■SREL timing adjustment

■Equipments required

Circuit Tester

■Procedure

1. Connect Circuit Tester as shown.
2. Turn Bevel Gear–A in the direction of arrow until it stops.
3. By pushing Open Stop Lever slowly, check that the SREL (Release Sw.) is turned on before the Open Stop Lever is released from the Bevel Gear–A.
4. If not, bend part–ⓐ to adjust the SREL timing.

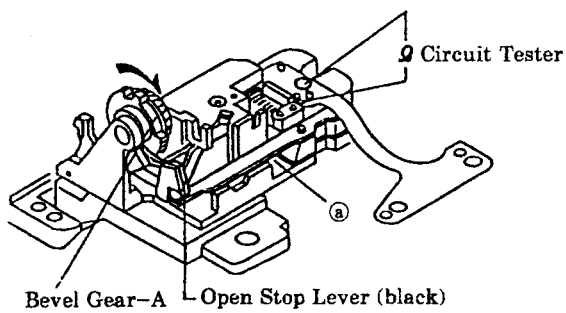

4 Mirror Box Assembly– II

■Install in the order of ① to ⑨.

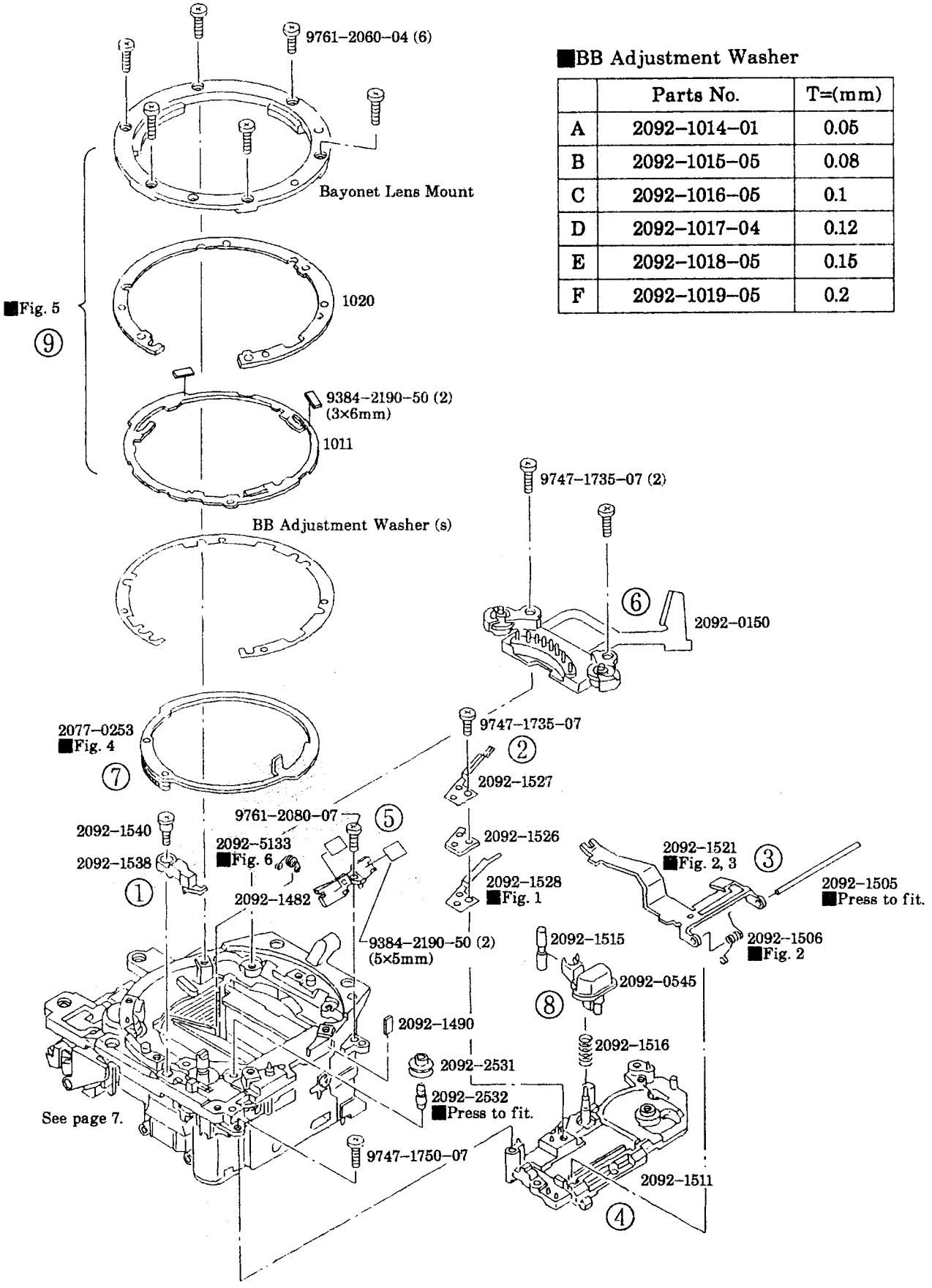

■BB Adjustment Washer

	Parts No.	T=(mm)
A	2092–1014–01	0.05
B	2092–1015–05	0.08
C	2092–1016–05	0.1
D	2092–1017–04	0.12
E	2092–1018–05	0.15
F	2092–1019–05	0.2

■Fig. 1

• Hook tip of 2092–1528 to AF/M Contact Base Plate as shown.

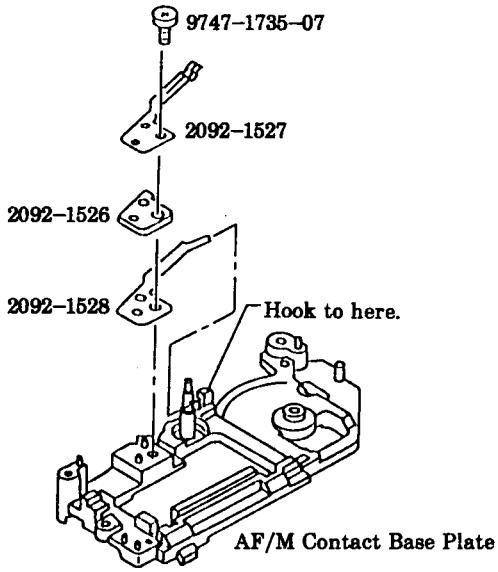

■Fig. 2

• Thread 2092–1505 as shown, and insert tip of 2092–1506 to the hole of 2092–1521. Then press the 2092–1505 to fit to the groove of AF/M Contact Base Plate.

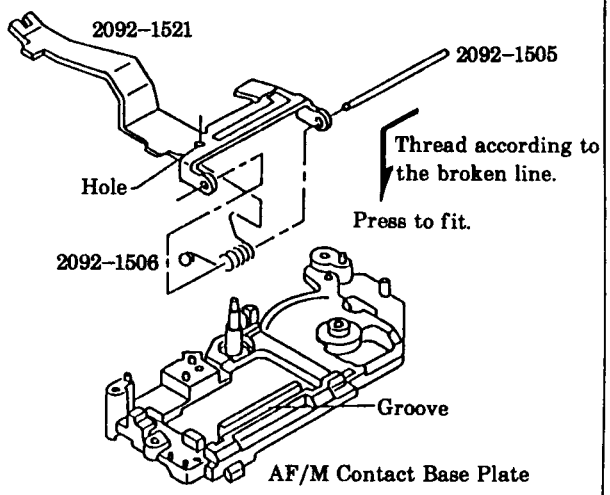

■Fig. 3

• Fit tip notch of 2092–1521 to groove of AF Coupler.

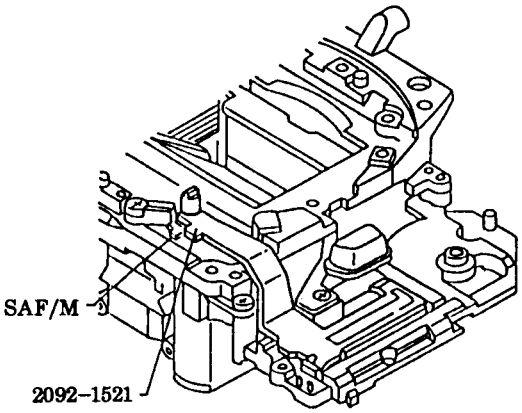

■Fig. 4

①Set Aperture Base Plate Unit to aperture stopped down position.
②Insert Aperture Ring Set aligning the punch mark with the hole of Aperture Base Plate Unit.

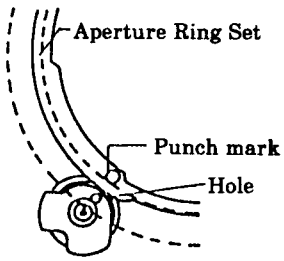

■Fig. 5

①Install 1020 to Bayonet Mount as shown.
②Stick two pieces of double faced tape to affix 1011.

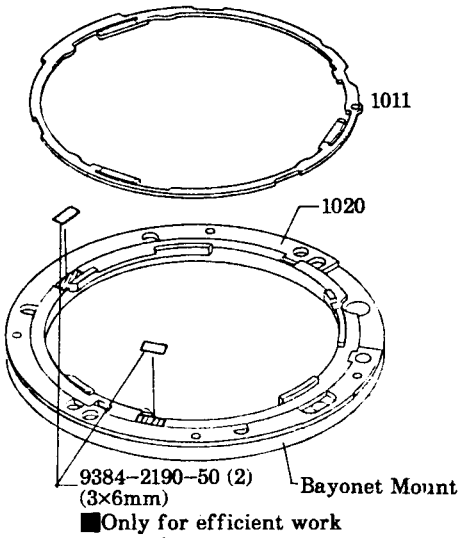

■Only for efficient work
(not always necessary)

■Fig. 6

• Install 2092–5133 as shown.

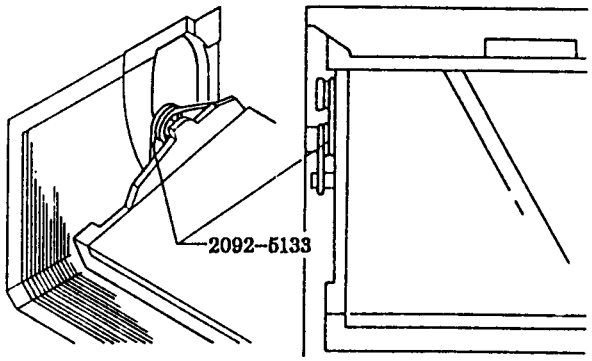

5 Penta Prism Assy, FPC–A Assy Installation

■Install in the order of ① to ⑤.

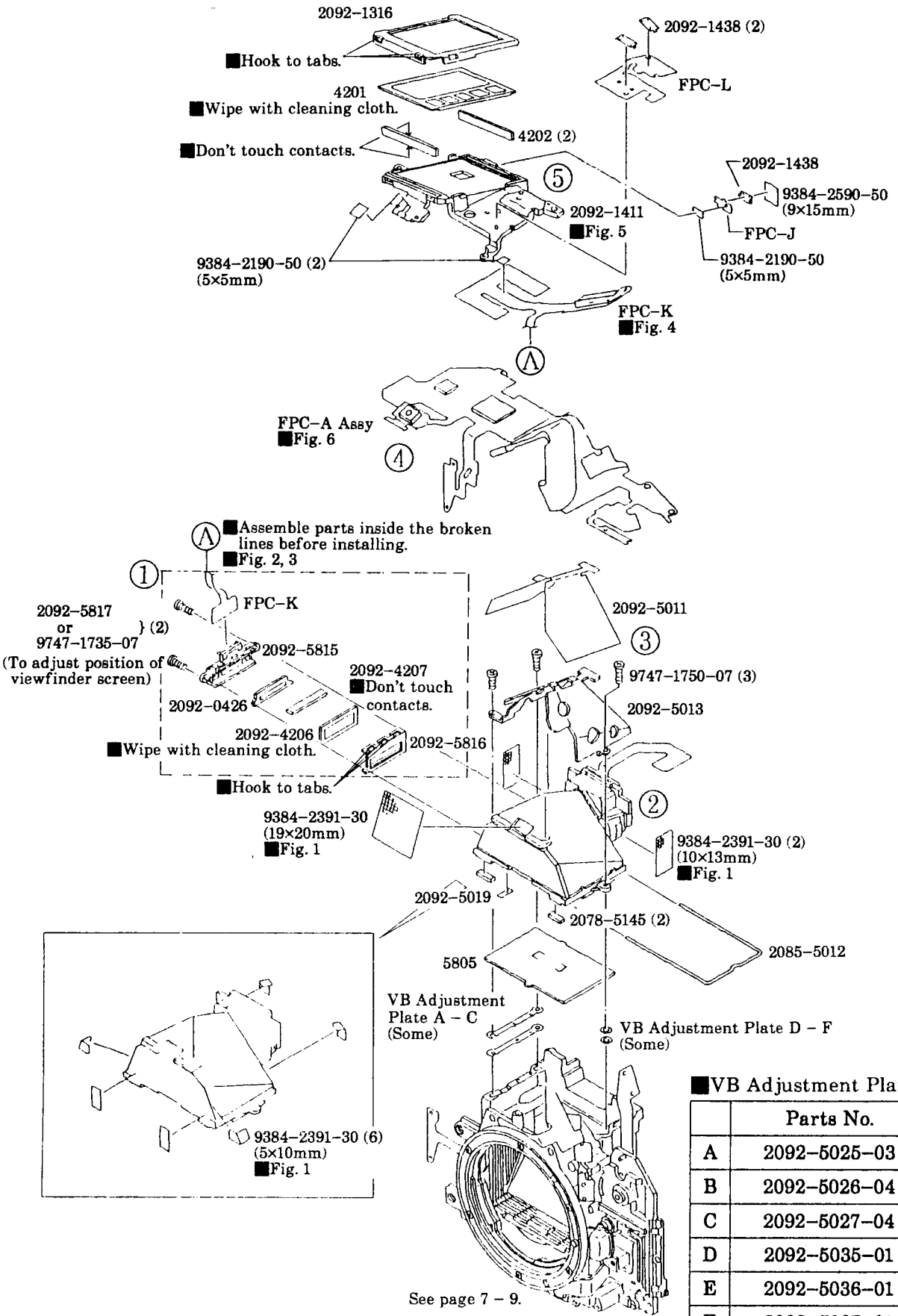

■VB Adjustment Plate

	Parts No.	T=(mm)
A	2092–5025–03	0.2
B	2092–5026–04	0.15
C	2092–5027–04	0.1
D	2092–5035–01	0.2
E	2092–5036–01	0.15
F	2092–5037–01	0.1

■Fig. 1

• Affix 9 pieces of Acetate Tape to shaded areas.

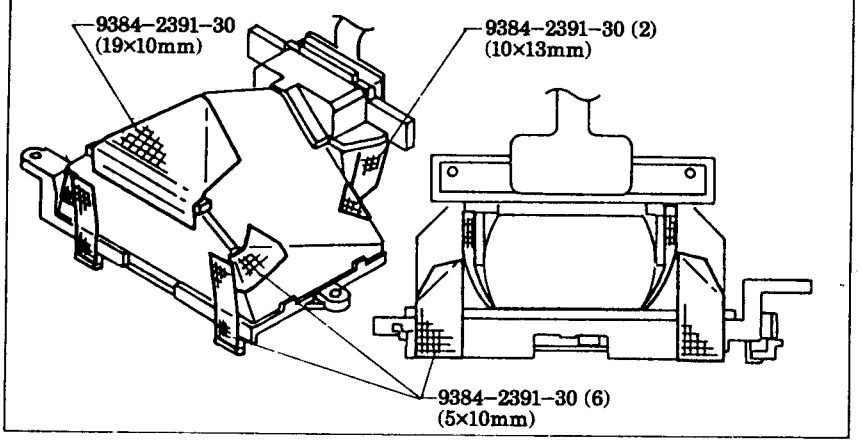

■Fig. 2

• Fold FPC-K as shown.

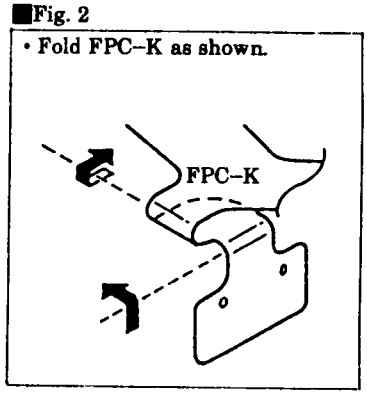

■Fig. 3

• Install FPC-K to 2092-5815 by fitting its tip to groove, holes to posts.

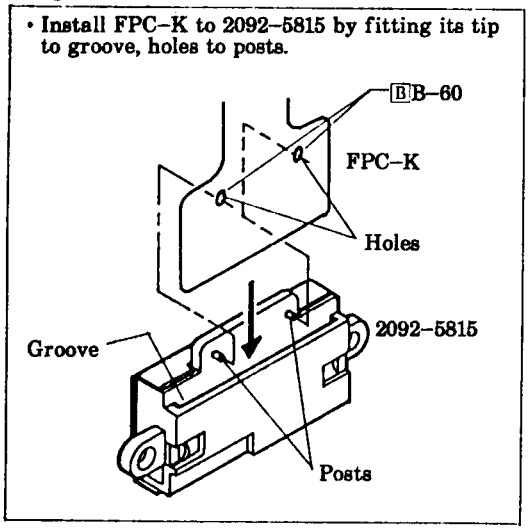

■Fig. 4

• Fit holes of FPC-K to pin on FPC-A, then fold the FPC-K as shown.

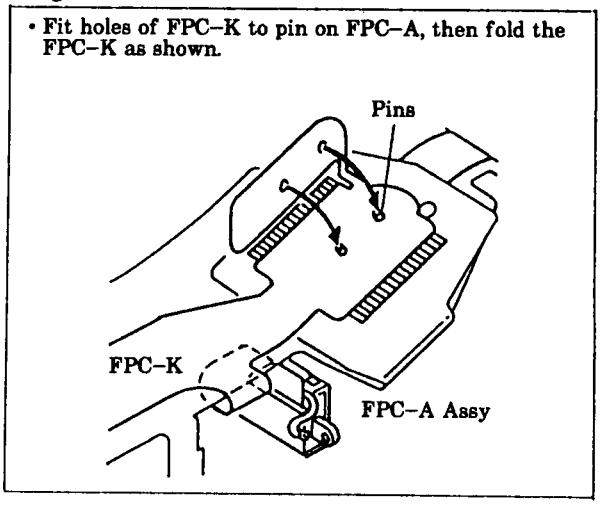

■Fig. 5

• Install FPC-K to Shutter-Release Base by fitting to grooves and posts.

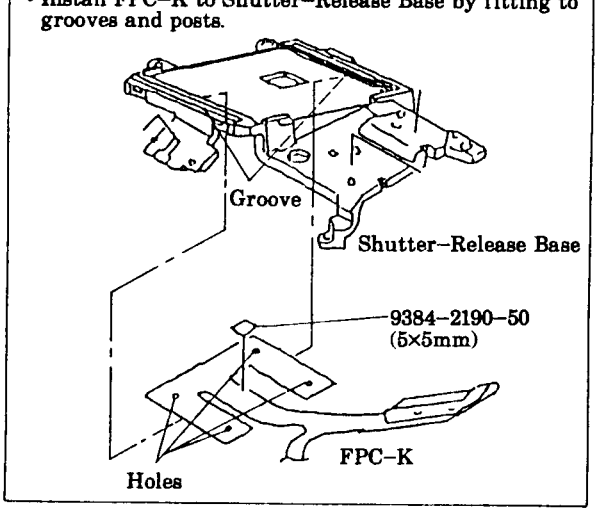

■Fig. 6

• Fit the indicated part of FPC-A Assy to the posts of Shutter-Release Base

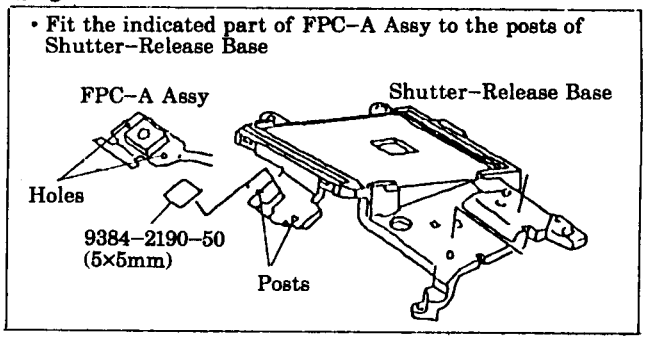

6 Mirror Box Assy Installation

■See Lead wire arrangement (P. 14) for wiring.
■After installation, check mechanical operation (P. 14).

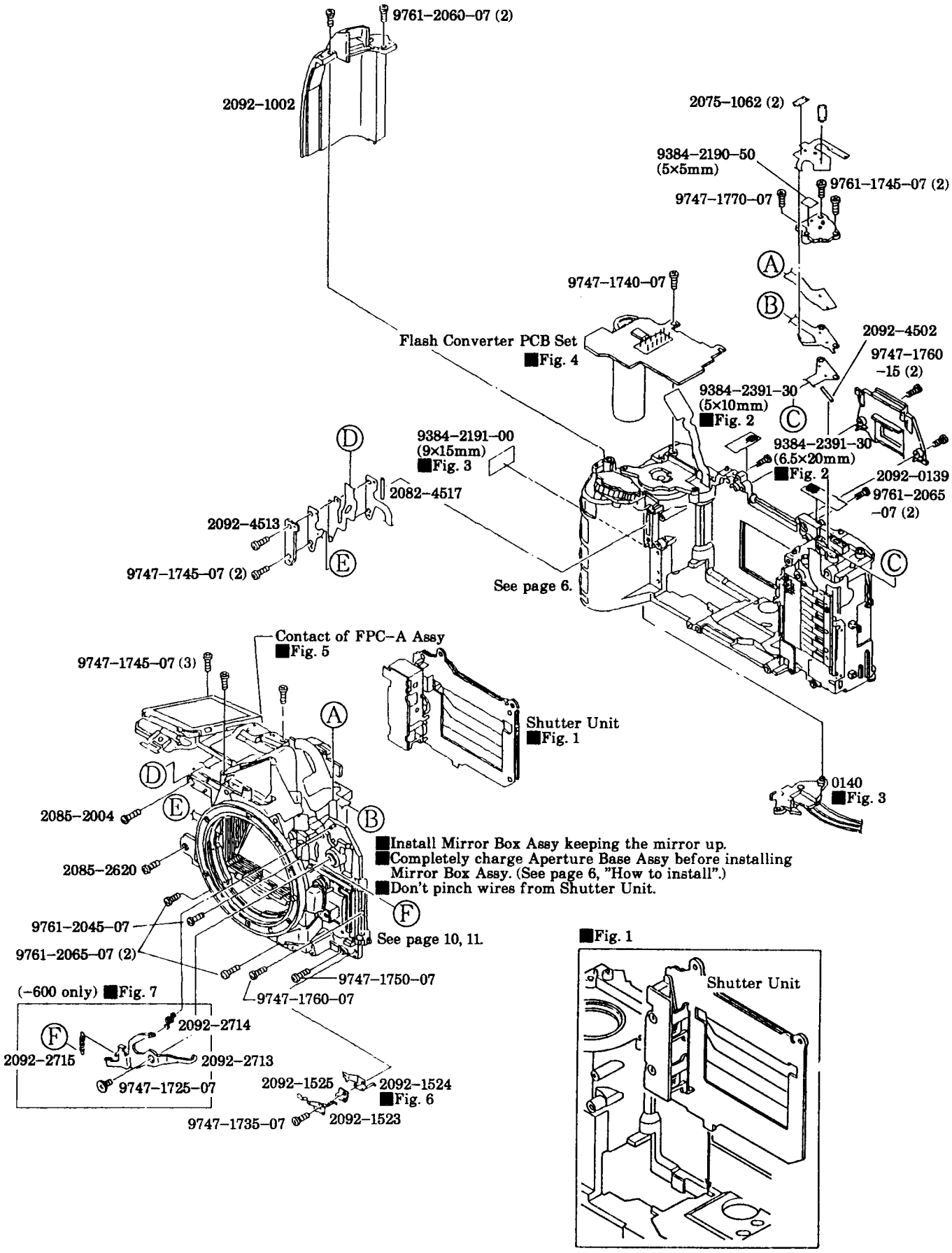

■Fig. 2

• 9384–2391–30 Installation

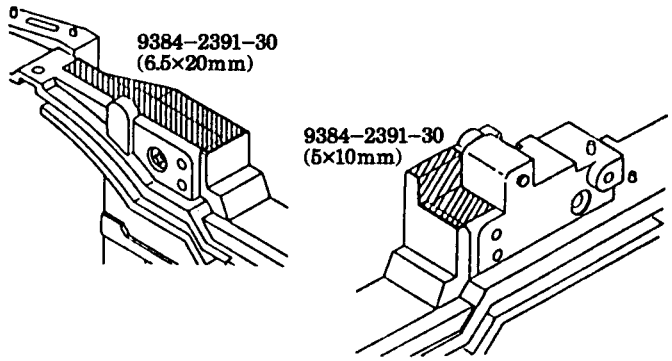

■Fig. 3

• Fit posts of 0140 to holes on body.

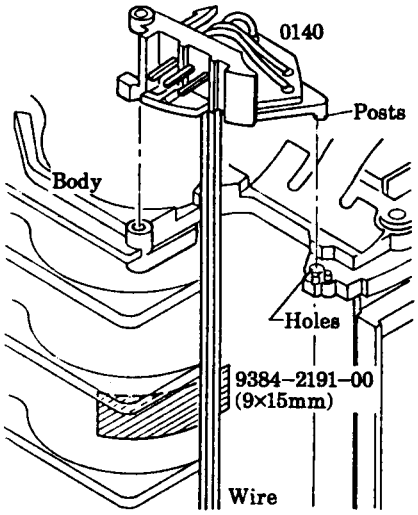

■Fig. 4

• Wire arrangement

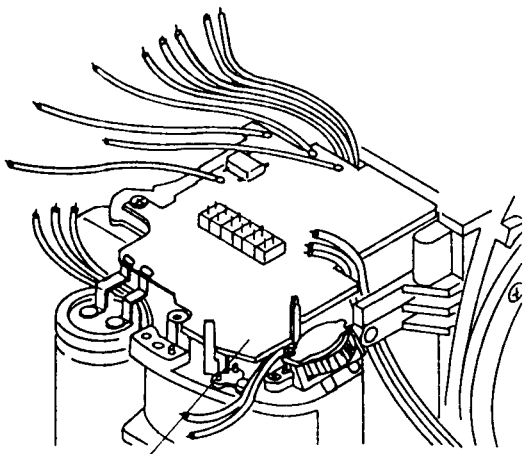

■Fig. 5

• Insert the contact of FPC–A Assy to the slit.

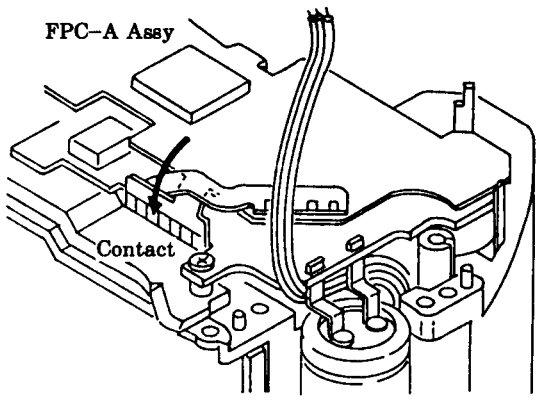

■Fig. 6

• Hook the part ⓐ of 2092–1524 to AF/M Contact Base as shown.

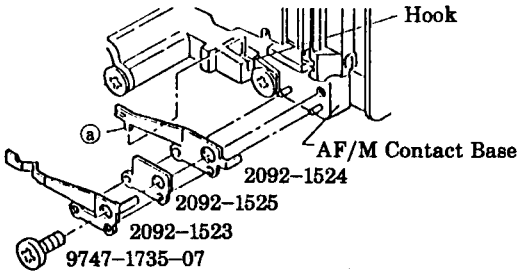

■Fig. 7

• While pushing and holding Panorama Frame Plate–A in arrowed direction, hook 2092–2715 to the Panorama Frame Plate–A and to 2092–2713 as shown.
• Hook 2092–2714 to 2092–2713 and to post of AF/M Contact Base.

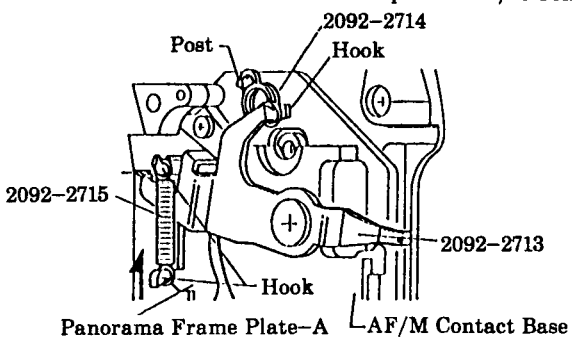

■Lead wire arrangement

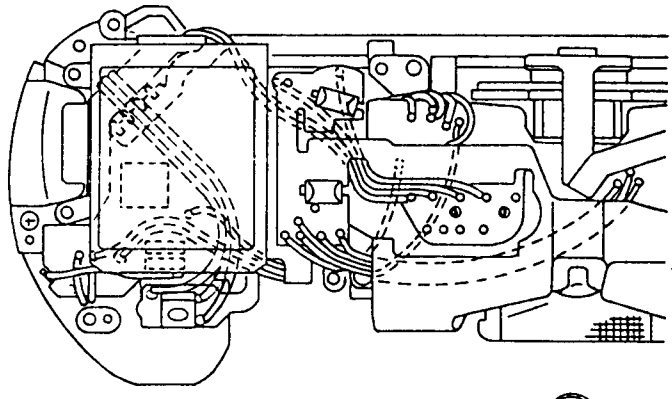

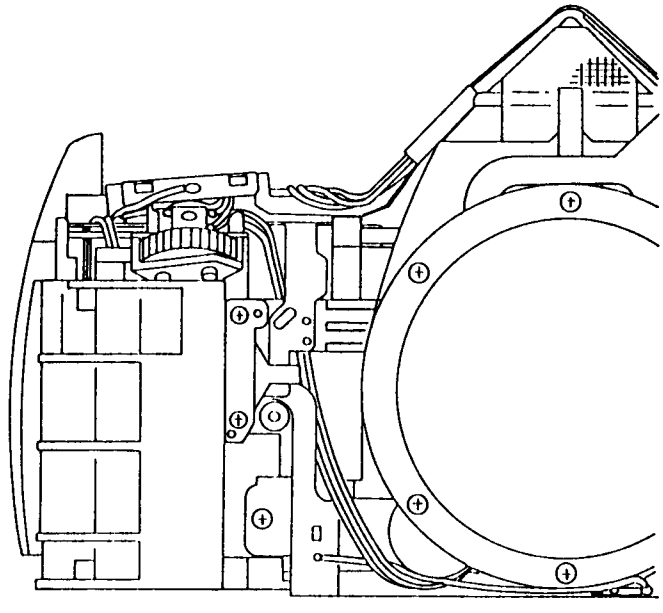

■Mechanical operation check

1. Insert Motor Axis Spanner to hole ⓓ of Winding Base Assy from the bottom of the body, then turn the motor manually in both directions.
   - Reverse drive (counterclockwise): Shutter is released then charged.
   - Normal drive (clockwise): Spool rotates.
2. If Aperture Ring Set doesn't operate smoothly, adjust Screw (9762–1745–07) for smooth operation.

■Fig. 1

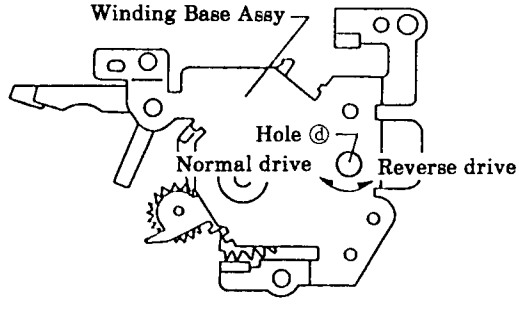

■Fig. 2

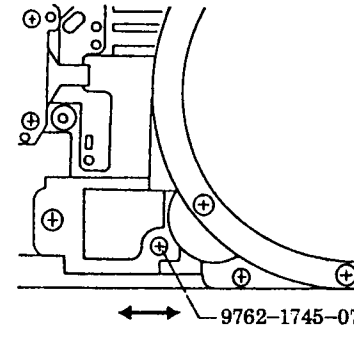

7 External Parts Installation

- Install in the order of ①~to ⑧.
- Discharge the main condenser before disassembly referring to page 2.
- Before installing Top Cover, be sure to unsolder main Sw. pattern or cut the pattern in FPC-A referring to page 2.

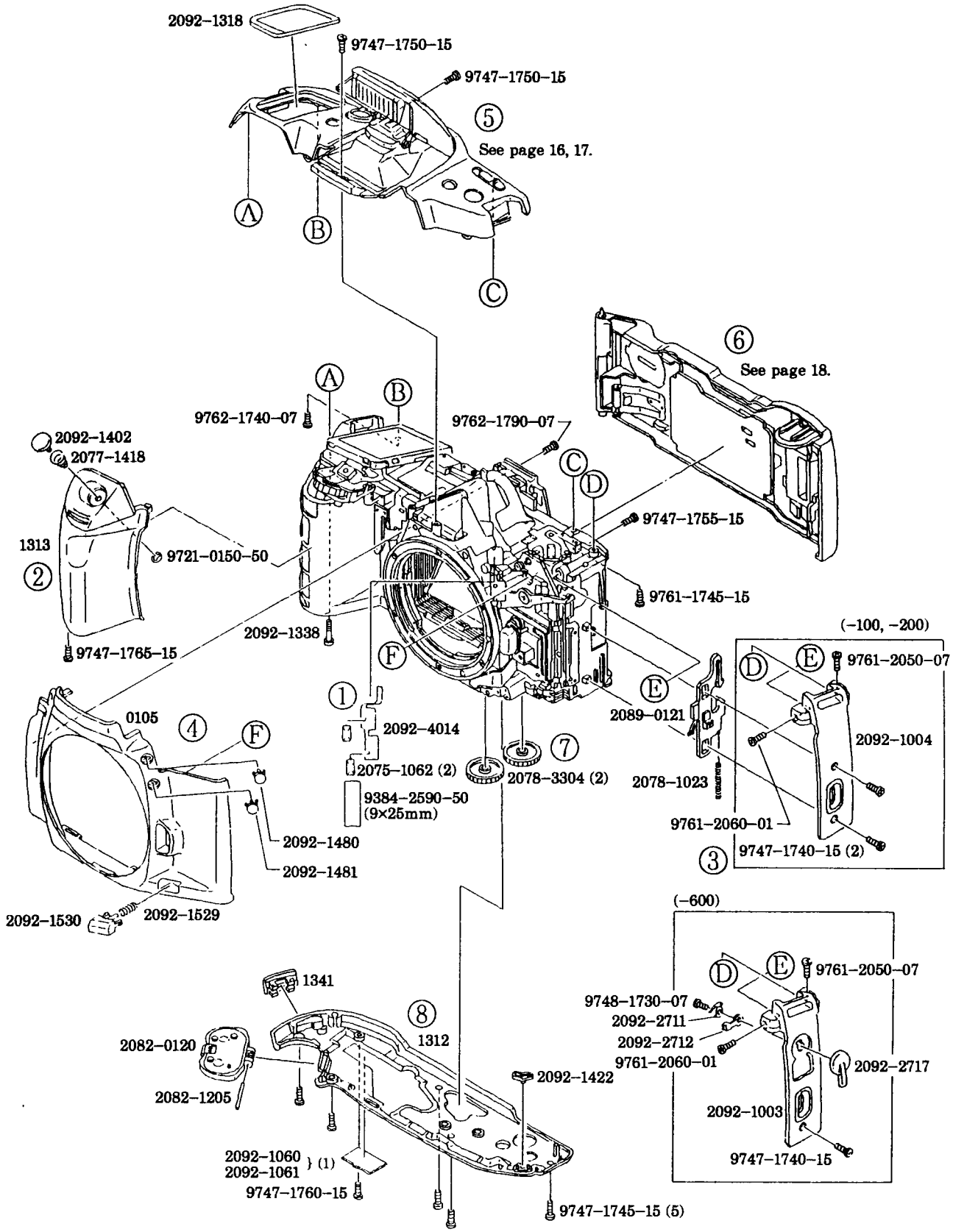

■Top Cover Assy Assembly

■Arrange wires according to Fig. 3 and 6.

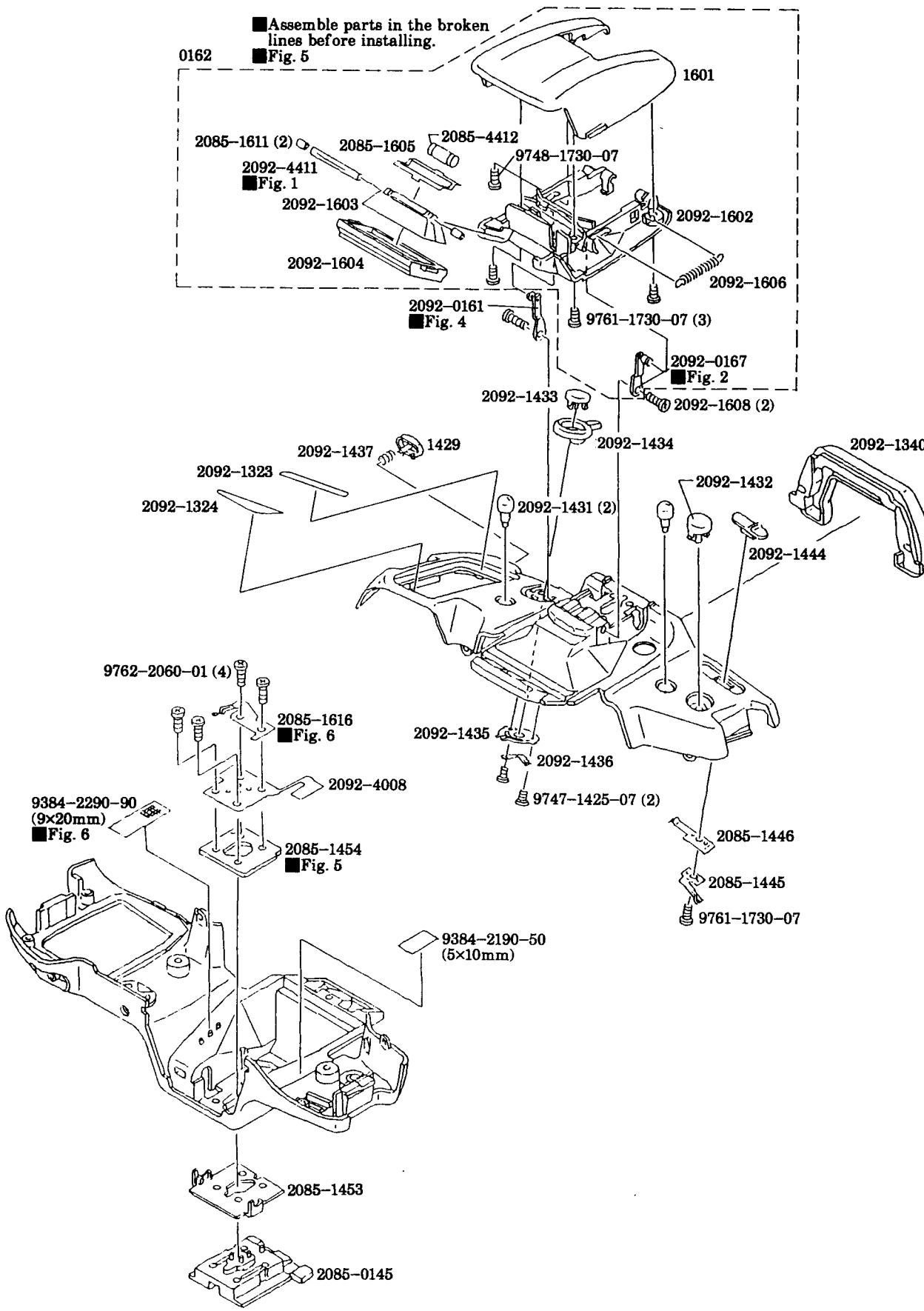

■Fig. 1

• Assemble 2092–1603 and 2085–1605, then insert XE tube.

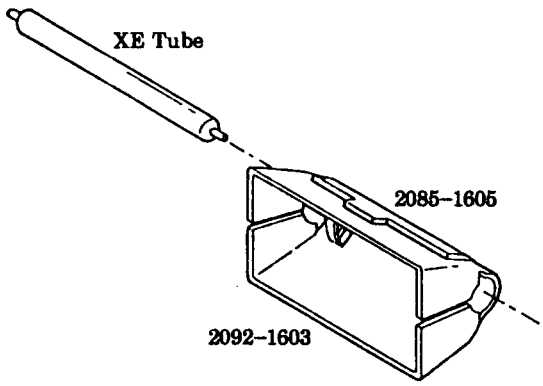

■Fig. 2

①Insert tip of 2092–0167 through the part ⓡ of 2092–1602.
②Hook one end of 2092–1606 to 2092–0167, the other to tab of 2092–1602.

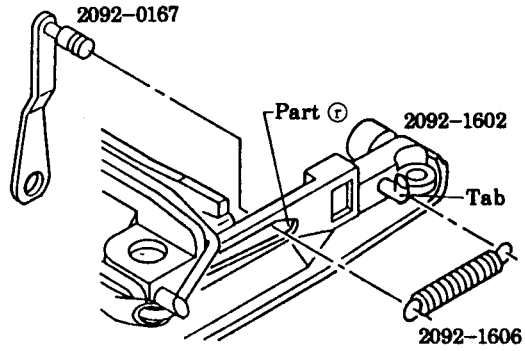

■Fig. 3

• Wire arrangement

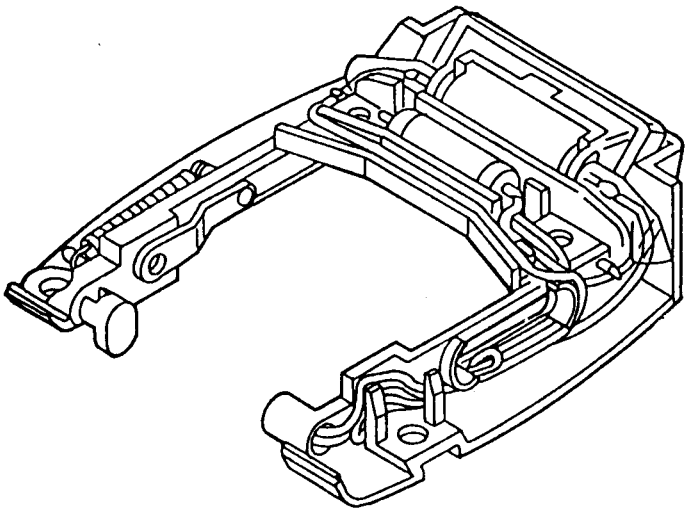

■Fig. 4

• Insert 2092–0161 to part ⓡ of 2092–1602.

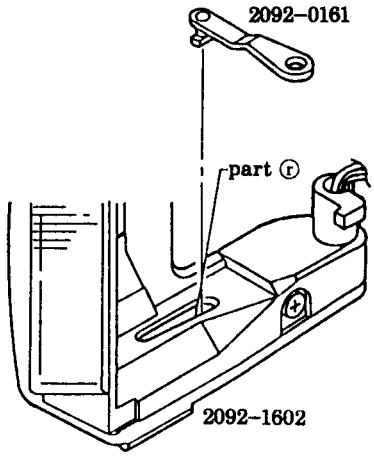

■Fig. 5

• Install Flash Assy with down position, then slide Shoe Setting Plate in the arrowed direction to install.

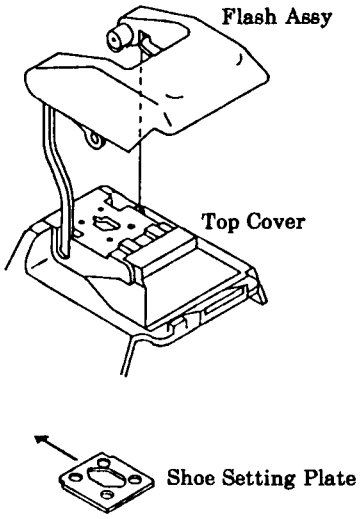

■Fig. 6

• Wire arrangement
• 2085–1616 should make contact with FPC–H when the flash is up.

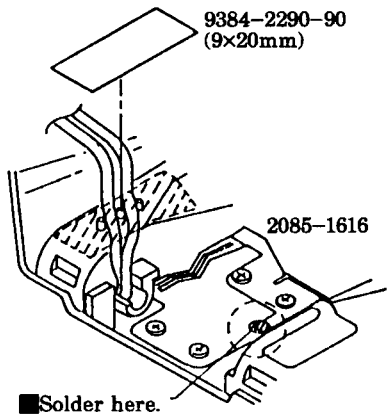

■Back Cover Assy Assembly

NON DATE MODEL (–100)

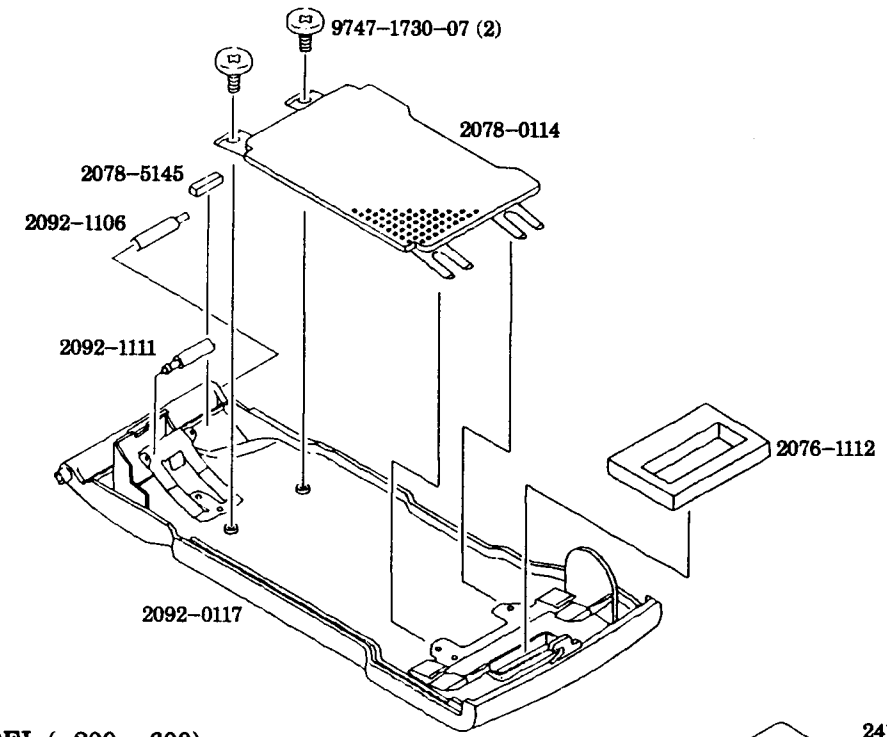

DATE MODEL (–200, –600)

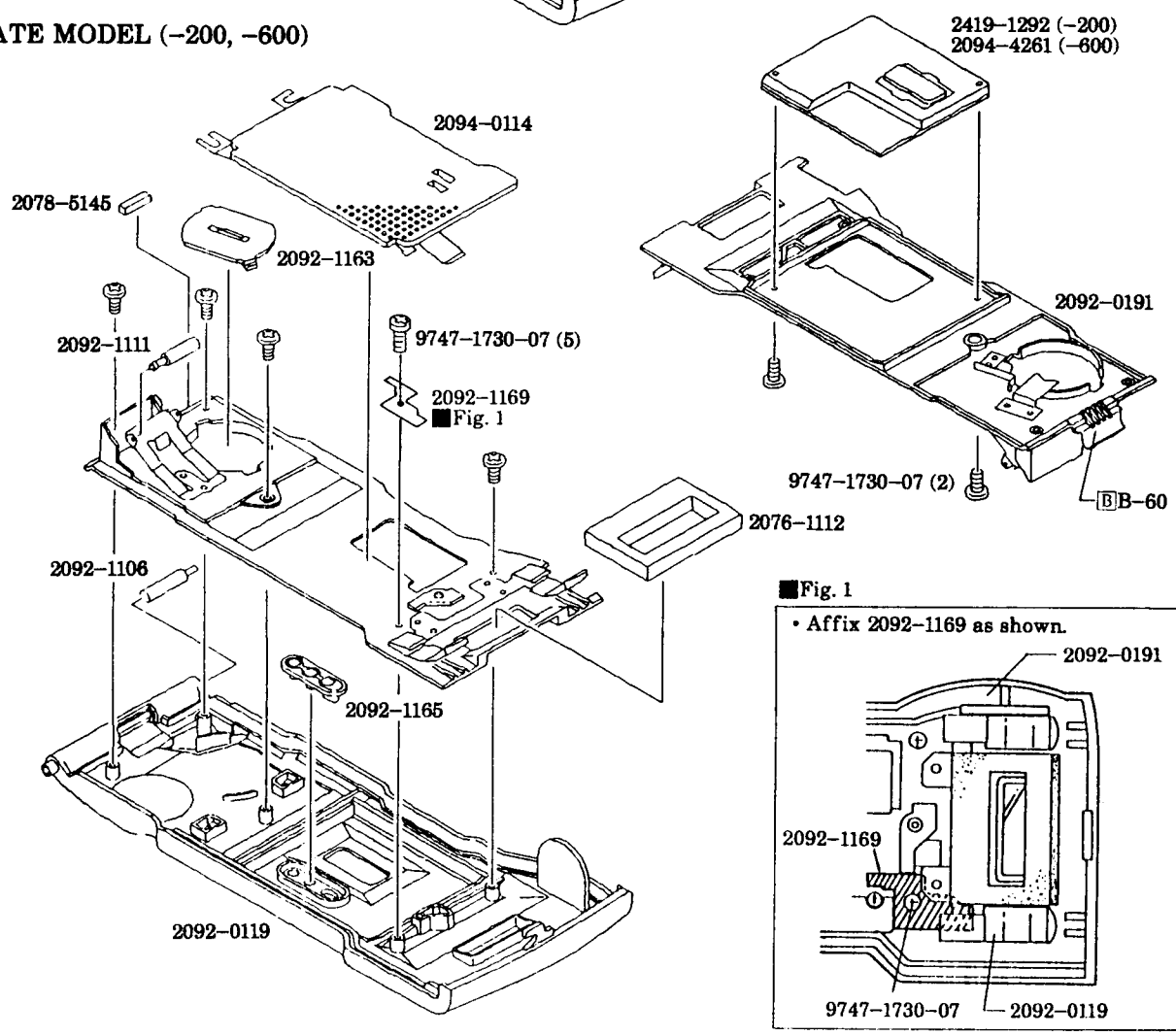

QS FA 2151-S01E Feb. 2002

SERVICE MANUAL SUPPLEMENTARY INFORMATION

CODE NO.	2151 series
MODEL	DYNAX 500si SUPER MAXXUM 500si ALPHA 303si SUPER

■ Conversion Procedure of Penta Prism Assy

#2151 Penta Prism Assy (2151-0581-01) is no longer available.
Apply information below for conversion procedure to substitute #2092 Penta Prism Assy (2092-0580-01), #2153 Penta Prism Assy (2153-0580-01) or #2154 Penta Prism Assy (2154-0580-01) for #2151 Penta Prism Assy.
When replacing the part with #2092, #2153 or #2154 Penta Prism Assy, use the components referring to the following compatibility.
The Penta Prism Assy can be disassembled and assembled easily referring the parts list in the respective Service Manual. The adhesive was applied to fix the FPC-SPC Assy.

■ Components Interchangeability (between #2151 Penta Prism Assy and the substitute)

Substitute	Penta Prism	FPC-SPC Assy	Penta Holder		Viewfinder LCD Subassembly		
					LCD2 2151-4206-01	FPC-K 2092-4011-01	Other parts
2092-0580-01	X	*1	O	X	X 2092-4206-01	O	O
2153-0580-01 2154-0580-01	O	*2	*3	X	X 2153-4206-01	X (FPC-I) 2153-4009-01	O

O: Interchangeable, X: Not Interchangeable, *1,2,3: Conditionally interchangeable

*1: When using the FPC-SPC Assy of #2092 Penta Prism Assy, be sure to perform the SPC Position Adjustment.
*2: When using the FPC-SPC Assy of #2153 or #2154 Penta Prism Assy, remodel it for the FPC-SPC Assy of #2151 referring to the FPC-SPC Remodeling Technique (pg. 3)
*3: When using the Penta Holder of #2153 or #2154 Penta Prism Assy, use the Penta Pressure (2153-5013) together.

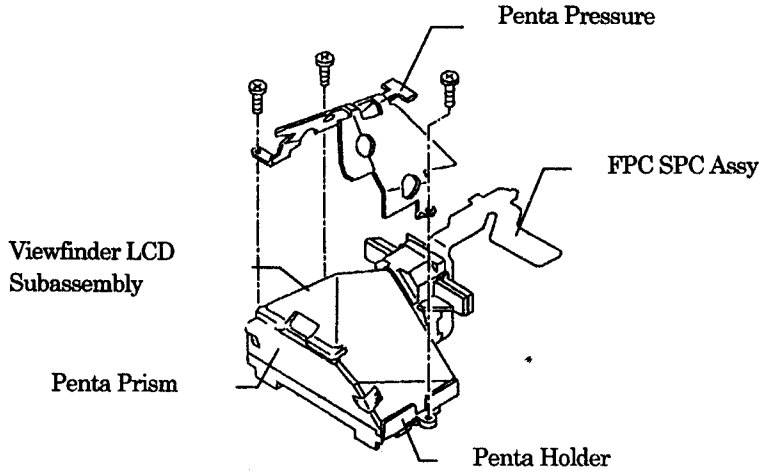

Penta Prism Assy

This information should be filed in your service manual.
サービスマニュアルにファイルして使用してください。

■ SPC Position Adjustment

Equipment Required

HIT Controller <7981-5001-01 or -06>
ROM Pack II for 2092 <7981-5001-74>
Contact Jig-C for HIT <7981-5001-13>
IF Box for HIT <7981-5001-33>
SPC Chart <2078-0002-75; Discontinued>
AF Master Lens <2072-0001-75 or -76>

Preparations

Install the exterior parts other than the Top Cover Assy.
Light up the chart evenly with two flood lamps.

Adjustment

1. Set up the equipment as in Fig. 1.
2. Select "AE ADJ" from the main menu and press the Select Button on the HIT Controller.
3. Select "AE CHECK" from the menu and press the Select Button on the HIT Controller.
4. According to the display, press the Shutter-release Button part way down. (S1 ON)
5. Adjust the position of the FPC SPC Assy so that the difference between the center cell and the others cells is within -1.5EV. (Fig. 2)
   To adjust the SPC position easily, remove the applied adhesive completely when detaching the FPC SPC Assy from the Penta Prism Assy.
   Apply B-20 to designated position as in Fig. 3.
6. Press the Select Button on the HIT Controller to return the main menu.

■ Fig.1

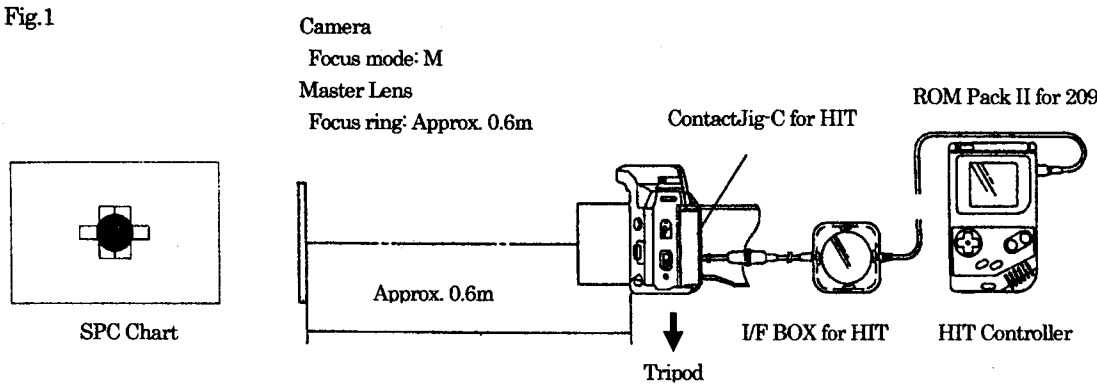

■Align the Spot Metering Circle of the camera with the Black Circle of the chart

■ Fig.2

(Example)

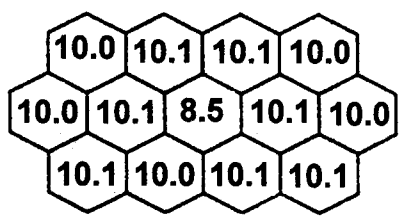

■ Fig.3

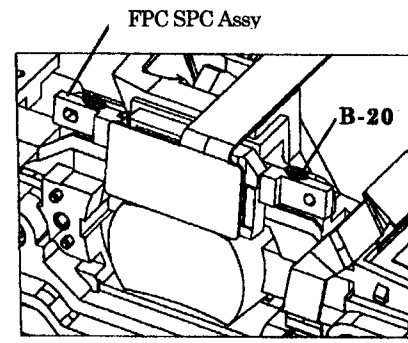

This information should be filed in your service manual.
サービスマニュアルにファイルして使用してください。

Check

1. Set the SPC Chart 0.6m apart from the camera referring to Fig. 1.
   It is unnecessary to connect the HIT System (HIT Contact Jig-C) to the camera.
2. Align the Spot Metering Circle of the camera with the Black Circle of the chart.
   Set the focus mode in MF mode, and Turn the focus ring setting at 0.6m.
   A (Aperture priority) mode or S (Shutter priority) mode is recommended.
3. Ensure that the difference between the spot metering when pressing the Spot Button and the average metering when pressing the Shutter-release Button part way down is within -1.5EV.

■ FPC-SPC Remodeling Technique

1. Unsolder all elements to separate from the #2153 or #2154 FPC-SPC Assy. (Fig. 1)
2. Solder the 20mm length of lead wires to connect the CN-O between the flex of FPC-SPC Assy (Flex-O) and the FPC-A Assy referring the wiring diagram in Fig. 2. (pg. 4)
   Before installing the Top Cover Assy to camera (#2151), be sure to stick the pieces of the Acetate Tape or the pieces of the Polyester Tape to isolate the connecter (CN-O).
   Otherwise, the connecter (CN-O) may short-circuit.

■Fig.1

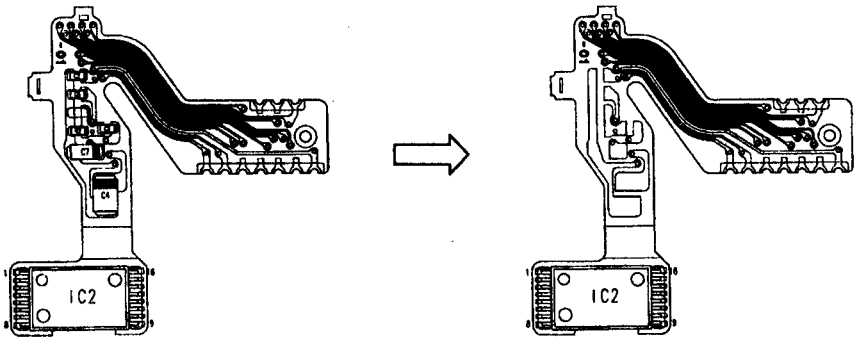

■Fig.2

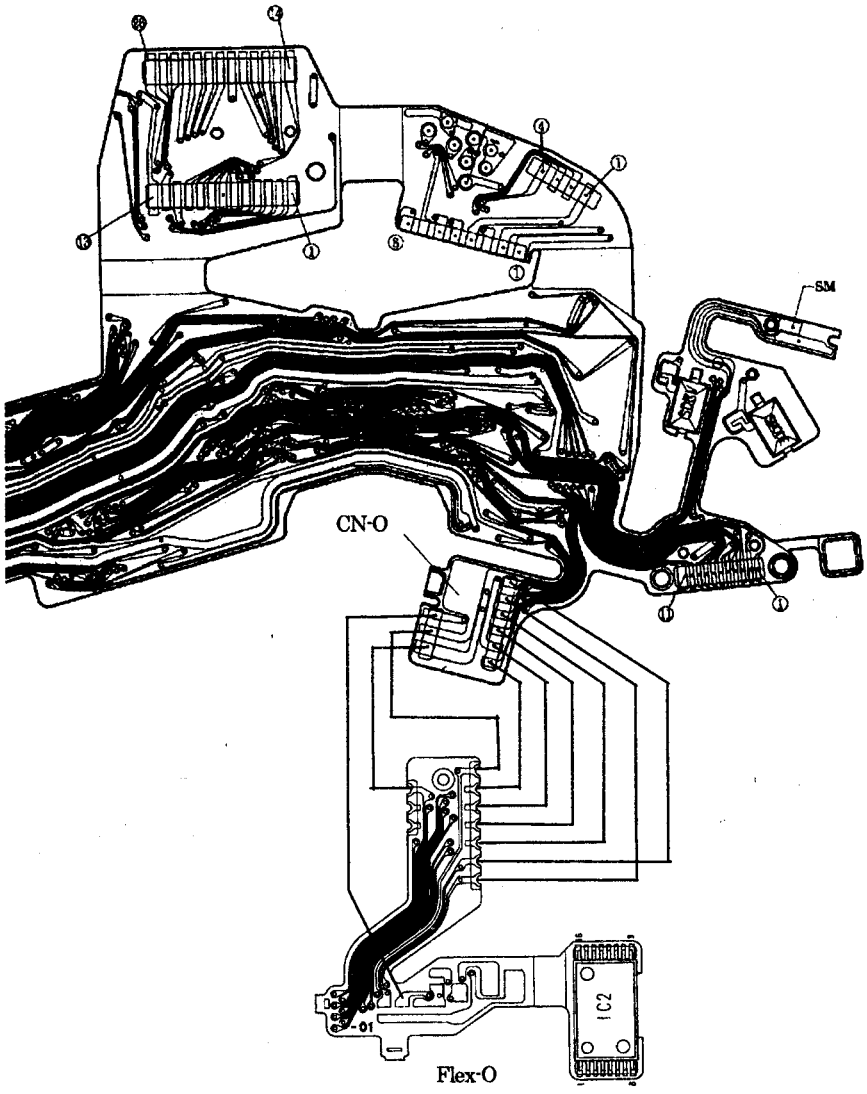

Trouble-shooting chart

1. Introduction

Use this chart to diagnose trouble of the camera. In addition to the trouble-shooting chart, this section includes Map of Electrical Elements, Name of Switches, Timing Chart, and Circuit Diagrams.

2. How to use the chart

*Before starting, if the camera had accessories attached, check the operation with or without the accessories to determine product with problem.

①Trouble-Finding Chart;

First, follow this chart to see the trouble symptom.
And use this chart as the index for Cause Finding Chart.

②Cause-Finding Chart;

See trouble symptom found with the Trouble-Finding Chart and find its cause.
Listed are relevant elements, switches, connectors or wires which are considered to be defective.

*Trouble causes mentioned here are only major ones. Make overall investigation to find other causes.

3. Note

(1)Use Digital Multimeter or a Voltmeter having input impedance of 10MΩ or more to check the voltage.
(2)Use Circuit Tester of 3V or less to check conductivity.
(3)Check carefully for poor soldering or incorrect switch operation; electrical elements themselves (IC, diode, transistor, resistor, or condenser) seldom cause the trouble.
(4)Do not press elements or pull wires strongly.
(5)When checking the voltage at the patterns where switch operates, be careful not to obstruct switch operation nor to scratch the pattern.
(6)Before removing electrical parts, be sure to disconnect Power Supply Adapter.
(7)Use Soldering Iron at the temperature of 290 to 340 ℃. If higher, solder quickly.
(8)When handling ICs, avoid static electricity.
(9)Set DC Power Supply to 5.8V, 2.5A.

CONTENTS page

■Trouble-Finding Chart ..... 2 - 3
■Cause-Finding Chart ..... 4 - 9
■Electrical elements on FPC-A 10
■Map of electrical elements 11-13
■Name of switches 14
■Table of switches 15
■Timing chart 16
■Circuit diagram (overall) 17
■Circuit diagram (Flash Converter PCB) 18

■Trouble-Finding Chart

Follow the chart below to see what is the problem.
※If "HELP" appears in Body Data Panel while following this chart, see "HELP display appears" (P. 9).

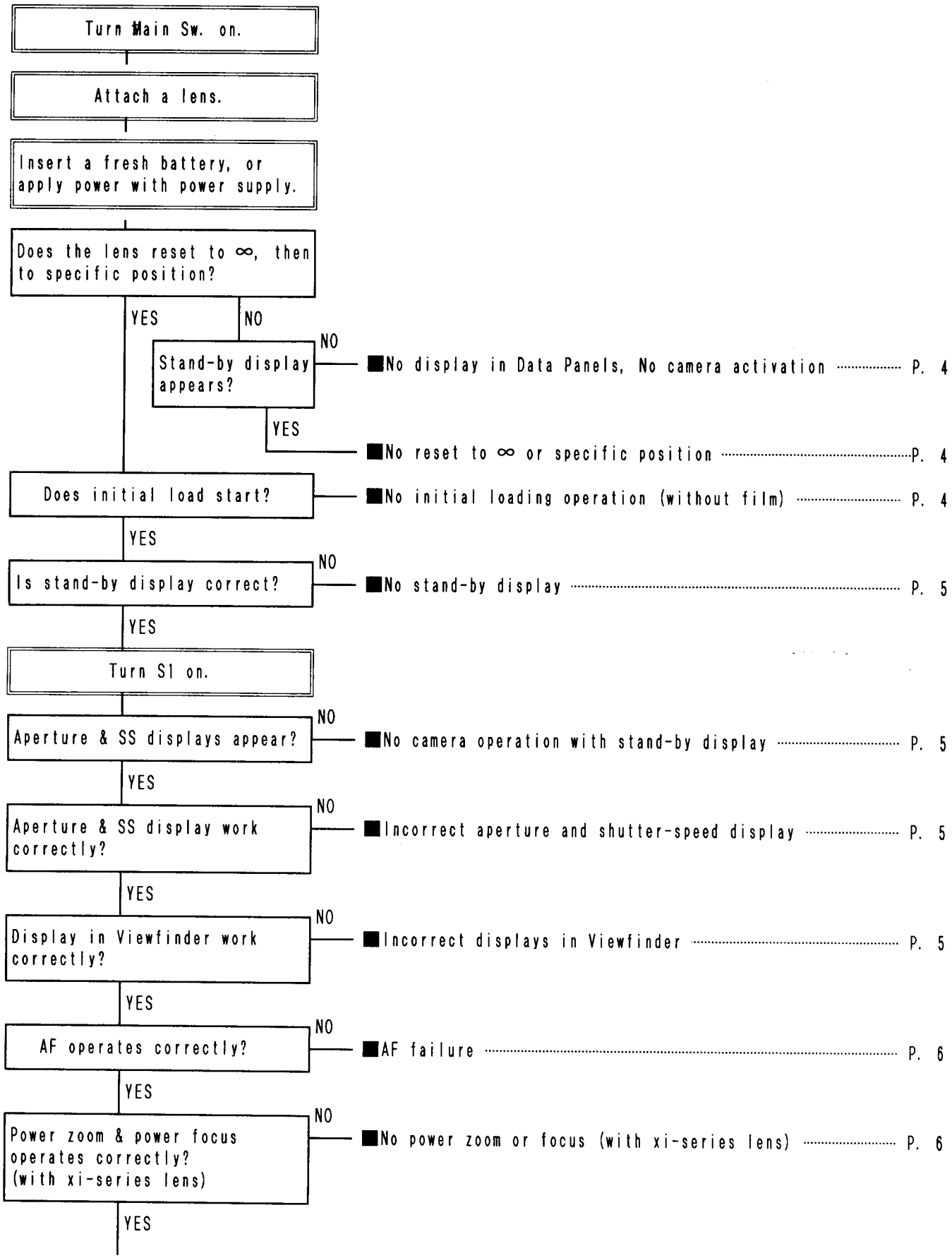

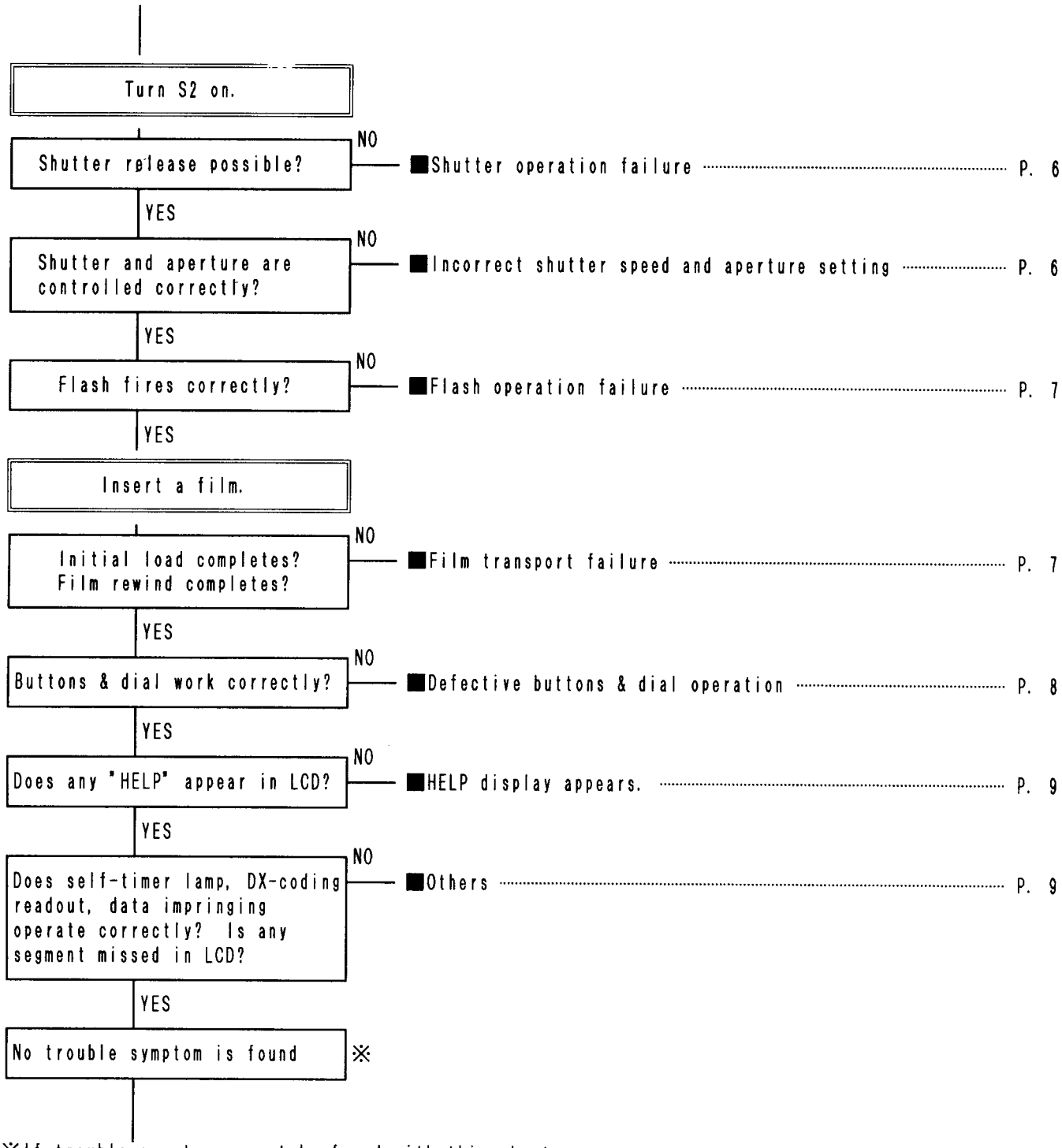

※If trouble symptom cannot be found with this chart,
- Using user's battery and lens, release the shutter about 100 times with a film loaded.
- With camera's lens mount side up or buttom side up, release the shutter to confirm the symptom pointed out by user.

■Cause–Finding Chart

■No display in Data Panels, No camera activation

Symptom	Cause		
	Element	Switch	Connector (CN) Lead wire
Nothing appears in Body and Viewfinder Data Panels, and camera doesn't activate.	(FPC-A) C4, C6, C7, C9, C8, C18, R1, R2, X1 X2	SBAT SM -	Battery contacts (+) (-) CN-FC (2) (8) (9) (11)
Low-battery Indicator blinks, and camera doesn't activate.	(FPC-A) C3, C11, R3, R7, R25, Q3		

■No initial loading operation (without film)

Symptom	Cause		
	Element	Switch	Connector (CN) Lead wire
Initial load operation doesn't start by battery installation (With main Sw. ON, No film)			W17 Winding motor (+) W18 Winding motor (-)

■No reset to ∞ or specific position

Symptom	Cause		
	Element	Switch	Connector (CN) Lead wire
No lens ∞ reset nor specific position reset with any lens attached. Focus mode remains at M. FOCUS. (AF doesn't operate.)	<FPC-A> R6	SLLK	CN-BL (1) – (8) W10 (Gray) W11 (Black) AF motor (+) (-)
No lens ∞ reset nor specific position reset with an xi-lens attached. Focus mode remains at M. FOCUS. (AF doesn't oeprate.)	<FPC-A> R9, R8, Q1, Q2,		CN-BL (3)

■No stand-by display

Symptom	Cause		
	Element	Switch	Connector (CN) Lead wire
No display in Body Data Panel. (Others operate correctly)	(FPC-A) C12, C13, C14, C15, R21		
Shutter Speed and Aperture Display appear, and AF starts operating. (Flash charge starts if it is up.)		S1	
Self-Timer Indicator appears, and camera doesn't operate.		SDRV	
Red-Eye Reduction Indicator appears, and camera doesn't operate.		SPRE	
Only "P" appears, and camera doesn't operate.		SPGM	
Film rewind starts, then "0" appears in frame counter with blinking film cartridge mark.		SREW	

■No camera operation with stand-by display

Symptom	Cause		
	Element	Switch	Connector (CN) Lead wire
No camera activation with stand-by display on Body Data Panel.		S1	CN-FC (3)
AF motor runs idle with stand-by display.	(FPC-A) C25		

■Incorrect aperture and shutter-speed display

Symptom	Cause		
	Element	Switch	Connector (CN) Lead wire
Aperture and Shutter-Speed Displays flicker.	(FPC-A) C3, C4		

■Incorrect displays in Viewfinder

Symptom	Cause		
	Element	Switch	Connector (CN) Lead wire
Back light of Viewfinder Data Panel doesn't light.	(FPC-A) R18		CN-K (19)

■AF failure

Symptom	Cause		
	Element	Switch	Connector (CN) Lead wire
Lens moves in small steps.	(FPC-A) C22, C23, R17		CN-G (1) (2) (3) CN-FC (7)
Focus isn't confirmed. Lens keeps scanning for low-contrast.	(FPC-A) D2		CN-B (1) (3) (7) (8)

■No power zoom or focus (with xi-series lens)

Symptom	Cause		
	Element	Switch	Connector (CN) Lead wire
Manual power zoom and power focus are impossible.			CN-BL (1)

■Shutter operation failure

Symptom	Cause		
	Element	Switch	Connector (CN) Lead wire
Shutter release is impossible		S2	W17 Winding motor (+) W18 Winding motor (-)

■Incorrect shutter speed or aperture setting

Symptom	Cause		
	Element	Switch	Connector (CN) Lead wire
No slit shutter			W4 (Red) W6 (Yellow)
Incorrect shutter speed of 1/60 sec. or faster			W5 (Brown)
Aperture stops down and HELP appears.	(FPC-A) C10	SFP	CN-F (4)
Aperture always set to fully-open position	(FPC-A) C24		

■Flash operation failure

Symptom	Cause		
	Element	Switch	Connector (CN) Lead wire
Flash doesn't fire			W25 (Yellow) W28 (Orange) W29 (Blue) W30 (Yellow) W31 (Gray) W41 W42 CN-FC (6) (4)
Pre-flash fires, but main flash doesn't fire.	(FPC-A) R5		W7 (Purple) W8 (Black)
Flash output is less than required.	(FPC-A) R10		
Flash always fully fires.	(FPC-A) C19		Shield wire
Dedicated flash doesn't fire. (Others operate correctly.)			W21 (Purple) W24 (Black)
Dedicated flash doesn't fire, and camera doesn't operate.			W23 (Orange)
Flash doesn't fire by manual fill-flash.		SFLAV	CN-N (1) (2)
Flash charge doesn't start.		SFLUP	

■Film transport failure

Symptom	Cause		
	Element	Switch	Connector (CN) Lead wire
Initial load doesn't start.		SRC	CN-D (3)
Initial load always fails.	(FPC-A) Q4, D3		CN-P (1) – (4)

■Defective buttons & dial operation

Symptom	Cause		
	Element	Switch	Connector (CN) Lead wire
Focus Mode Button doesn't work.		SRAF SAFM	CN-D (6) CN-M (6) W9 (Brown)
Aperture/Flash-Control Button doesn't work.		SFLAV	CN-N (2)
Rewind Button doesn't work.		SREW	CN-D (4) (5)
Display doesn't change according to Control Dial.			CN-DL (1) – (5)
Exposure Compensation Button doesn't work.		SOVR	CN-N (3) (4)
Mode Button doesn't work.		SMODE	
Drive-Mode/Self-Timer Button doesn't work.		SDRV	
Red-Eye-Reduction Button doesn't work.		SPRE	W14 (Brown) W16 (Blue)
Program-Reset Button doesn't work.		SPGM	W13 (Gray) W14 (Brown)
Command Switch doesn't work.		SPT	W12 (Black) W15 (Green)
Spot Button doesn't work.		SSPOT	W19 (Orange) W20 (Black)

■HELP display appears.

Symptom	Cause		
	Element	Switch	Connector (CN) Lead wire
HELP appears at battery installation.	(FPC-A) R17, C26		CN-FC (1) (5) (10) CN-O (1) – (9)
HELP appears at lens reset.			CN-O (3)
HELP appears at S1 on.	(FPC-A) C27, C29, R22, R23		CN-FC (12) CN-B (2) (4) (5) (6) (9) (10)
HELP appears after shutter release.	(FPC-A) C25, R4, R16, R19, R20	SFP	CN-F (4) (6) (7)
After shutter release, mirror goes up and down several times, then HELP appears.		SLOAD	CN-M (1) (2) (3) CN-F (2) (3) (5)
HELP appears at S2 on.	(FPC-A) R25		
Aperture is always set to stop-down position, and HELP appears.	(FPC-A) C10	SFP	CN-F (4)

■Others

Symptom	Cause		
	Element	Switch	Connector (CN) Lead wire
Self-Timer Lamp doesn't light.	(FPC-A) R18		
Missing segments in Data Panels			CN-K (1) – (26)
Mis-readout of DX-coding	(FPC-A) R11, R12		CN-D (7) – (11)
No data imprinting			CN-M (4) (5)
Data imprinting position doesn't change between panorama/normal.			CN-D (1) (2)

Electrical elements on FPC-A

FPC-A ASSY

Element	Location
C2	C-3
C3	D-3
C4	C-3
C5	D-3
C6	C-5
C7	C-5
C8	D-5
C9	D-5
C10	C-3
C11	C-4
C12	C-4
C13	C-4
C14	C-5
C15	C-4
C16	D-6
C17	C-6
C18	D-6
C19	D-7
C22	C-3
C23	C-7

Element	Location
C24	C-7
C25	D-3
C26	D-3
C27	D-3
C28	C-3
C29	D-7
D1	C-3
D2	D-3
D3	C-7
LD1	C-6
X1	D-5
X2	C-4
Q1	C-4
Q2	C-3
Q3	C-7
Q4	D-7
R1	D-4
R2	D-4
R3	C-3
R4	C-3

Element	Location
R5	C-3
R6	B-4
R7	C-4
R8	C-3
R9	C-3
R10	D-7
R11	C-3
R12	C-3
R16	D-7
R17	C-3
R18	D-6
R19	C-7
R20	C-5
R21	C-5
R22	D-3
R23	D-3
R24	C-4
R25	C-7

■Map of electrical elements (FPC–A Assy; electrical–elements mounting side)
■素子配置図 (A フレキセット：表面)

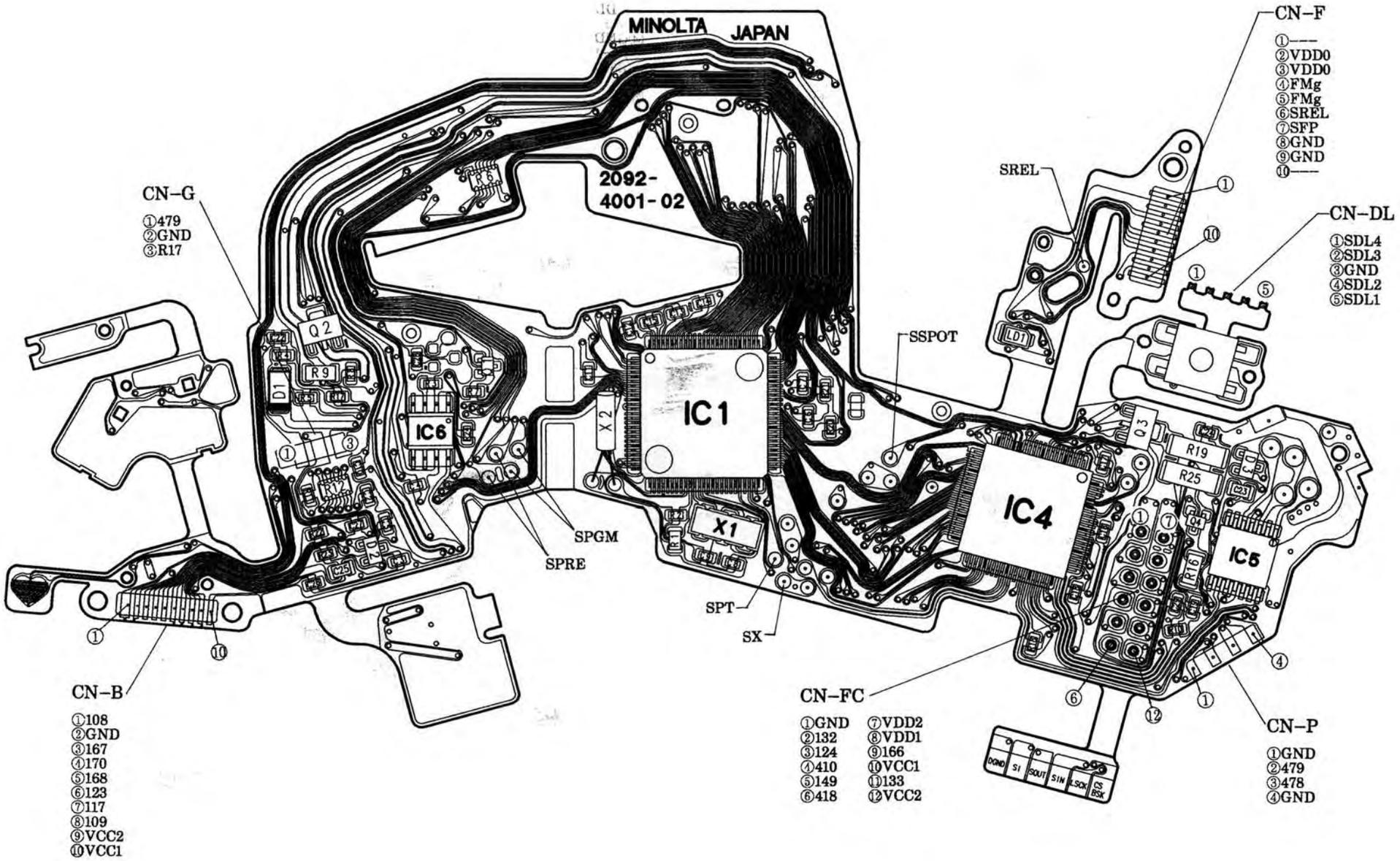

コネクター部(CN)の3桁の数字は、ICの端子番号を表しています 例) 1 23 IC–1 の23番端子 └端子NO. └IC NO.	The numbers of three figures represent the terminal No. of IC. EX) (1 23) Terminal 23 of IC–1 └Terminal No. └IC No.

■Map of electrical elements (FPC-A Assy)
■素子配置図 (A フレキセット：裏面)

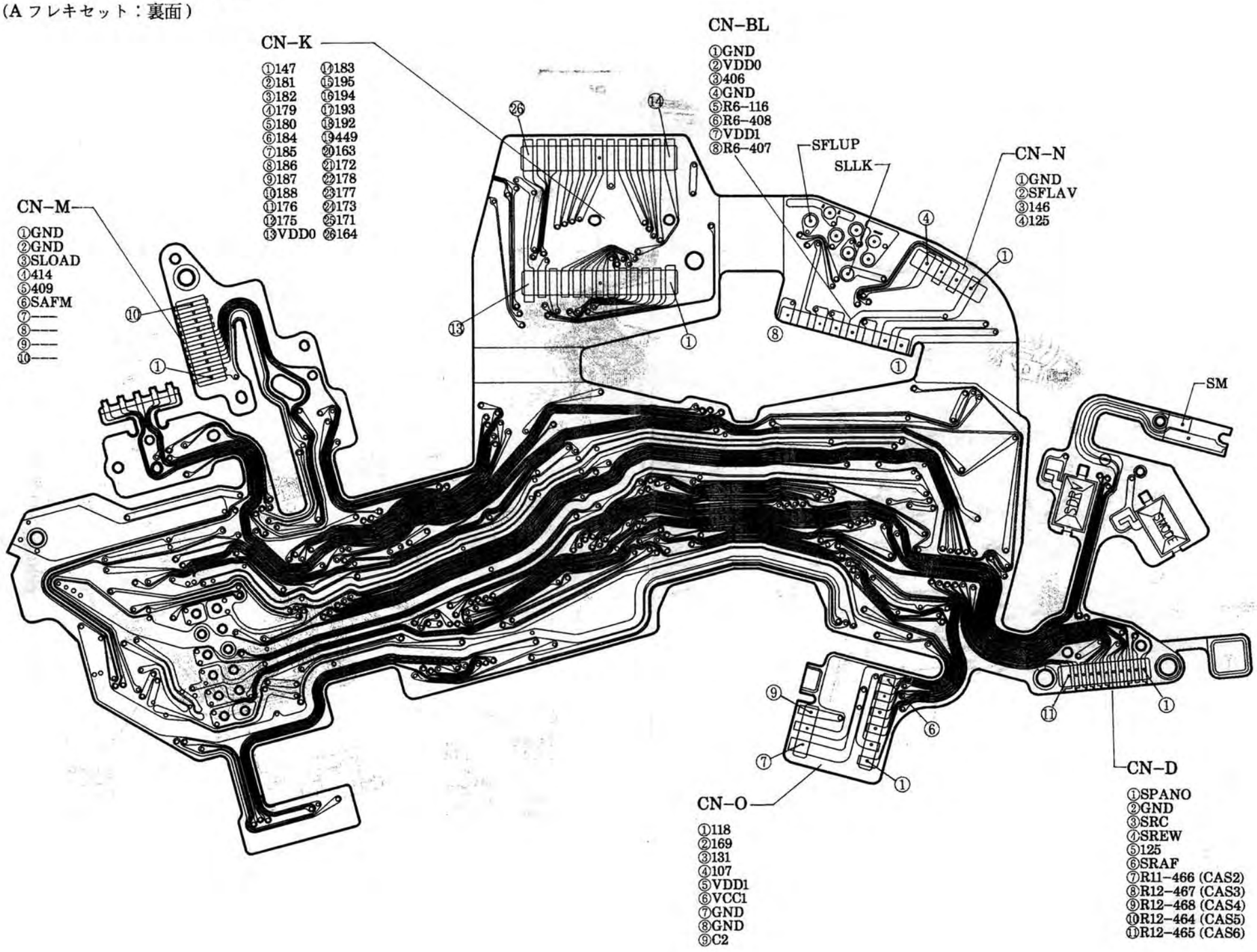

■Map of electrical elements (Flash Converter PCB Assy)
■素子配置図（フラッシュコンバーター基板セット）

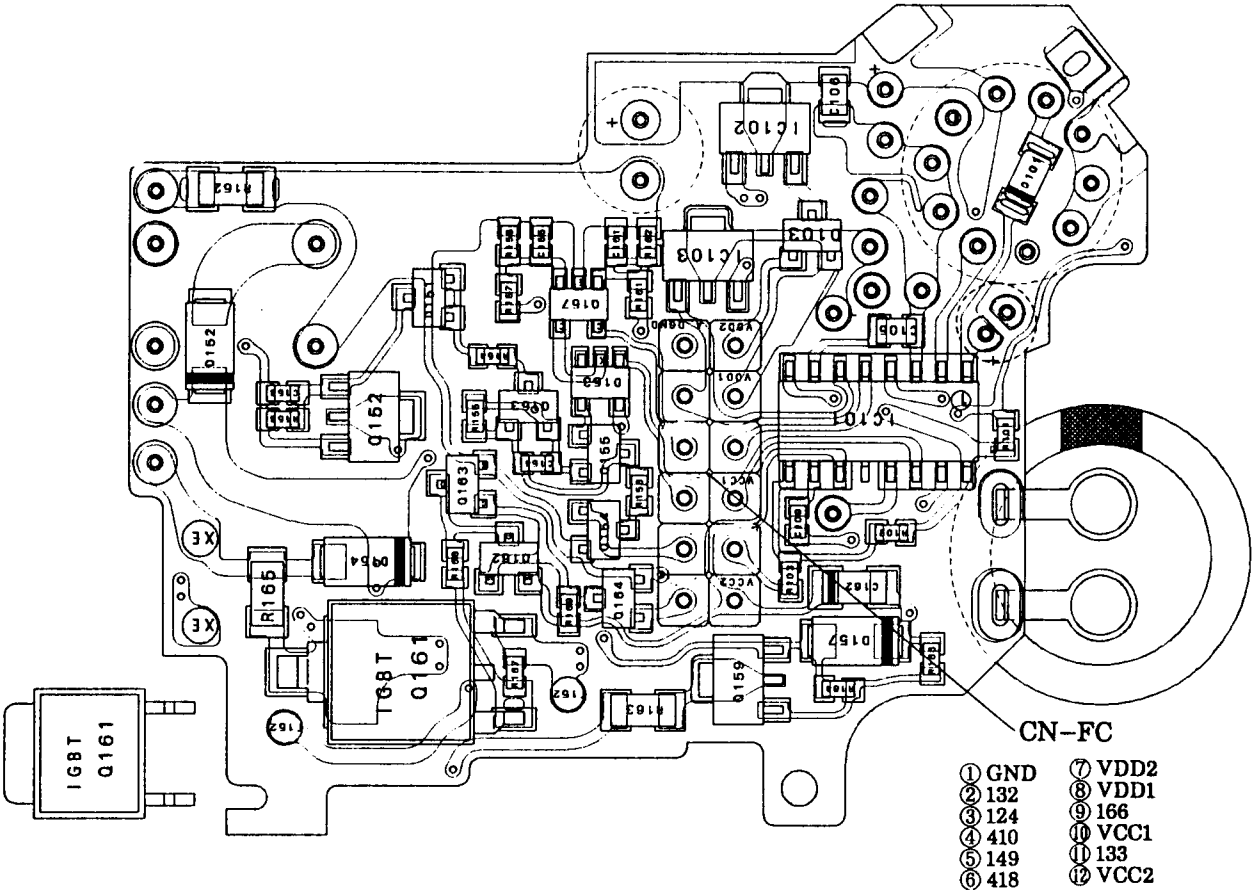

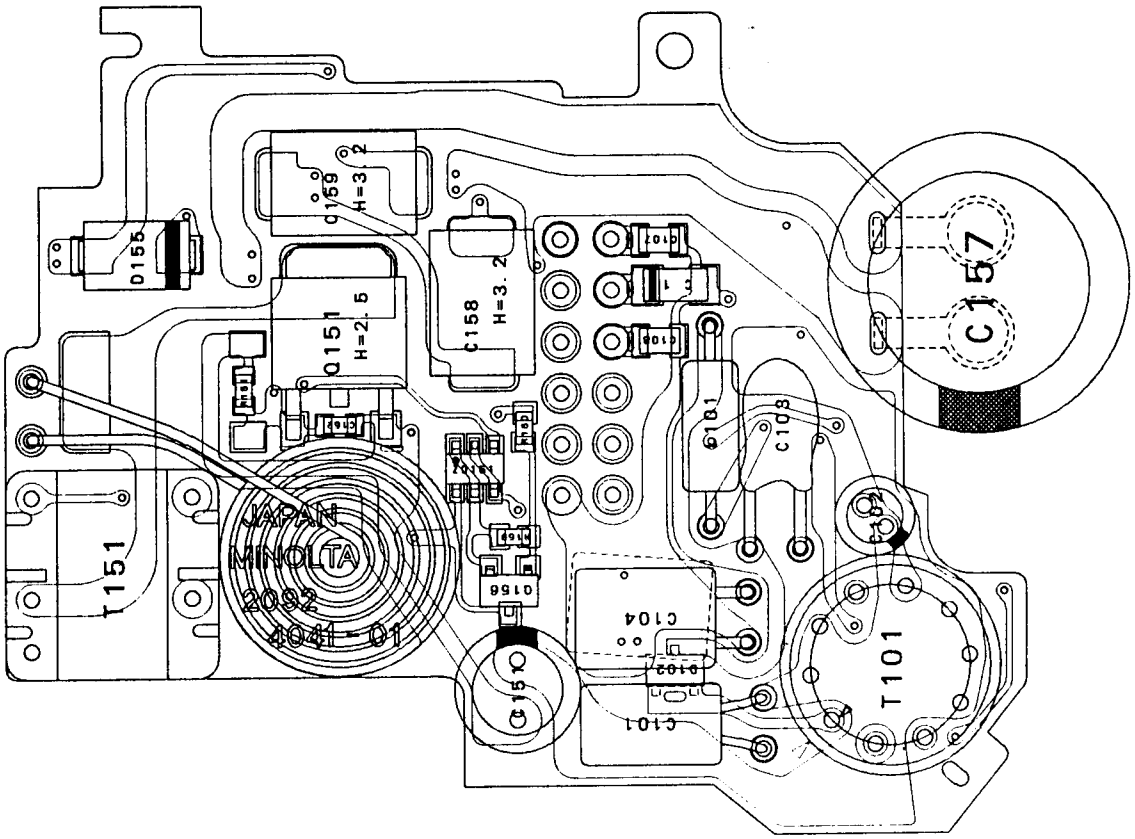

Name of switches

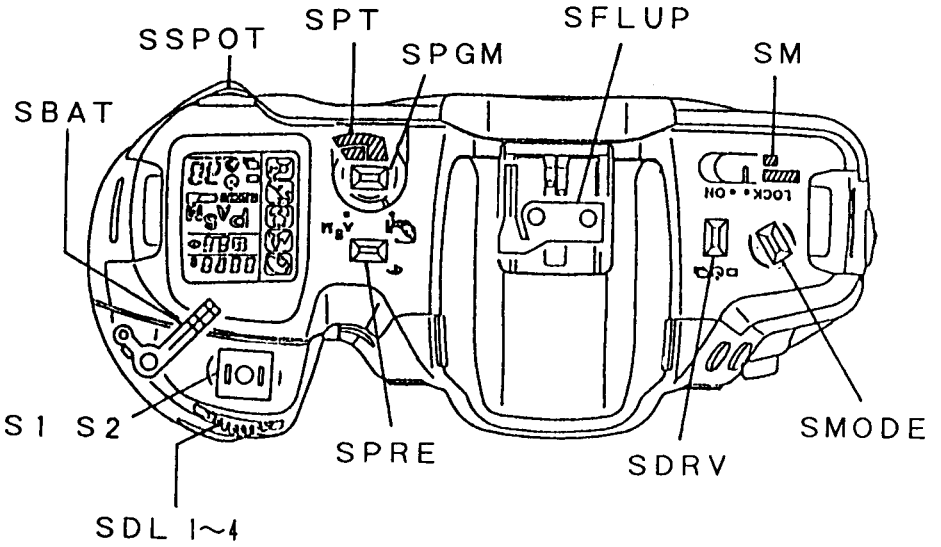

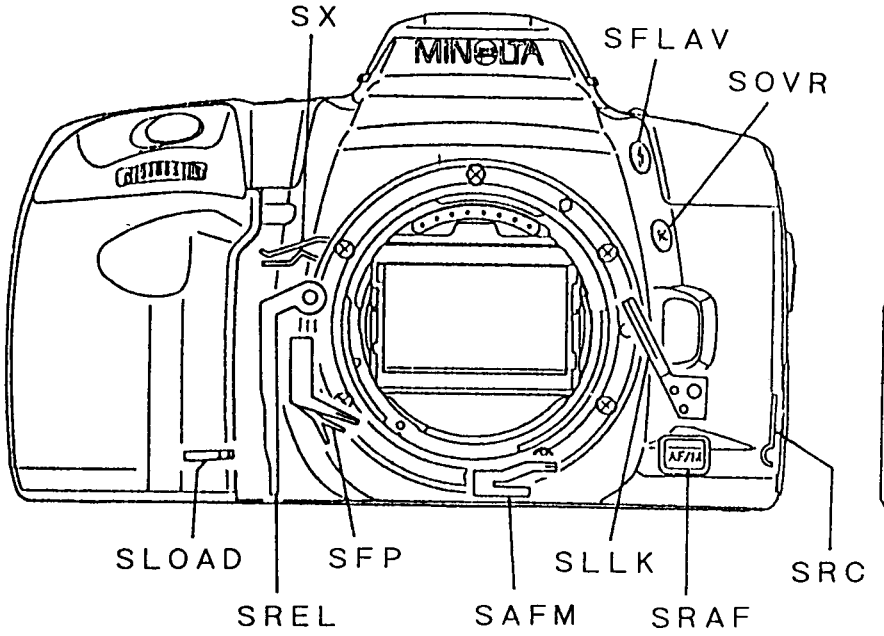

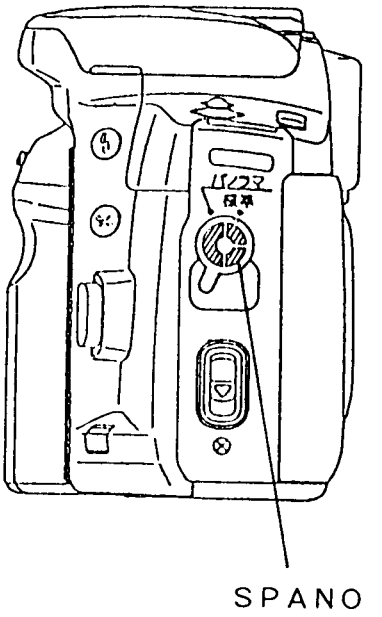

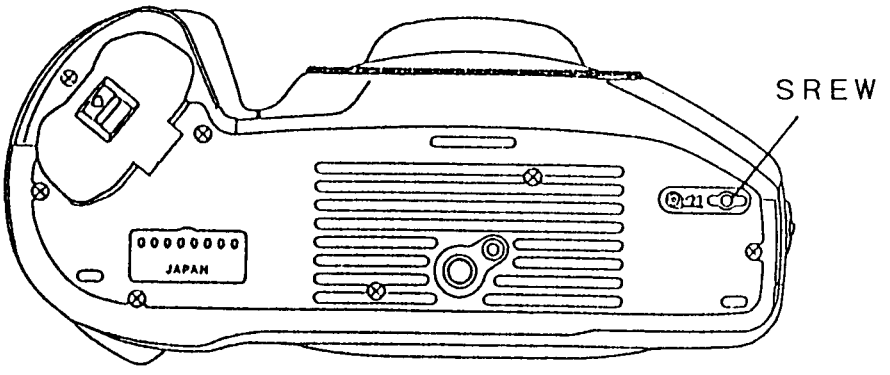

Table of switches

Symbol	Description	Function	Operation
SM	Main Sw.	Activates/locks camera's function	ON by sliding Main Switch to ON
S1	Metering Sw.	Activates metering, focusing, indication	ON by pressing Shutter-Release Button partway down
S2	Release Sw.	Starts shutter-release	ON by pressing Shutter-Release Button all the way down
SPT	S/C Sw.	Selects subject-program/exposure mode	ON by sliding Command Switch to subject-program mode
SPGM	Program Sw.	Resets camera to P mode	ON by pressing Program-Reset Button
SMODE	Mode Sw.	·Selects mode in subject-program/ exposure mode ·Selects film-speed when used with Drive-mode Sw.	·ON by pressing Mode Button (Set with Control Dial) ·Set by pressing Drive-Mode and Mode Buttons while turning Control Dial.
SDRV	Drive-mode Sw.	·Selects self-timer/drive mode ·Selects film-speed when used with Mode Sw.	·ON by pressing Self-Timer/Drive Mode Button (Set with Control Dial) ·Set by pressing Drive-Mode and Mode Buttons while turning Control Dial.
SREW	Rewind Sw.	Starts film rewind	ON by pressing Rewind Button
SOVR	Override Sw.	Sets exposure compensation value	ON by pressing Exposure-Compensation Button (Set with Control Dial)
SSPOT	Spot metering Sw.	·Selects spot metering ·For P, A, S mode flash, selects slow shutter sync.	ON by pressing Spot Button
SPRE	Red-eye reduction Sw.	·Sets/Cancels pre-flash, ·Sets/Cancels wireless flash	ON by pressing Red-Eye Reduction Button
SFLAV	Flash-control & Aperture Sw.	·Sets fill-flash in P mode ·Sets aperture in M mode	·ON by pressing Flash-control/ Aperture Button. ·Set with Control Dial
SFLUP	Flash position Sw.	Detects flash position	ON during bult-in flash is up.
ARAF	Focus mode Sw.	Changes focus mode	ON by pressing Focus-Mode Button
SAFM	AF/M detect Sw.	Detects focus mode status	ON: Manual mode, OFF: AF mode
SLLK	Lens-lock Sw.	Detects lens existence	OFF during lens attached
SRC	Back-cover Sw.	Detects back-cover status Activates initial load	OFF during back-cover is closed.
SREL	Release detect Sw.	Detects mirror up start or mechanical charge completion	ON at mirror up start, OFF at mechanical charge completion
SLOAD	Mech.-position detect Sw.	Detects winding completion or mirror charge completion	ON during mechanical charge, OFF at mechanical changeover
SFP	Aperture pulse Sw.	Detects aperture-stop-down position	ON/OFF according to aperture ring position
SX	Sync. Sw.	Triggers flash	ON at 1C traverse completion, OFF at film advance start
SDL1 to 4	Dial Sw.	Changes mode settings	ON/OFF by turning Control-Dial
SBAT	Battery Sw.	Resets IC1	OFF during battery installed
SPANO (*)	Panorama Sw.	Changes normal/panorama mode setting	OFF by sliding Panorama Switch to PANORAMA

*SPANO: Only for Panorama models (-600)

■Timing chart

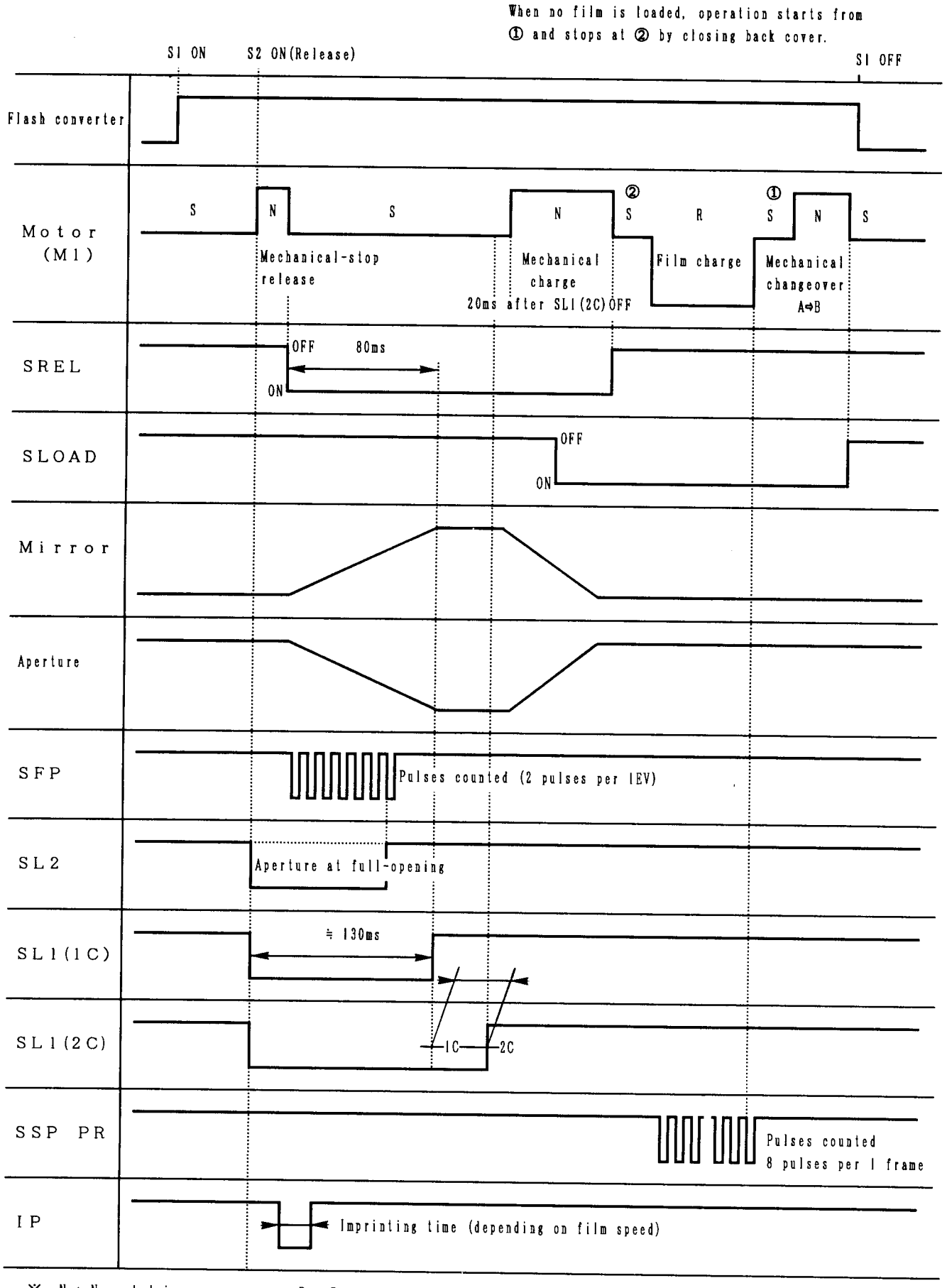

※ N : Normal drive R : Reverse drive S : Drive stop

■Circuit diagram
■回路図

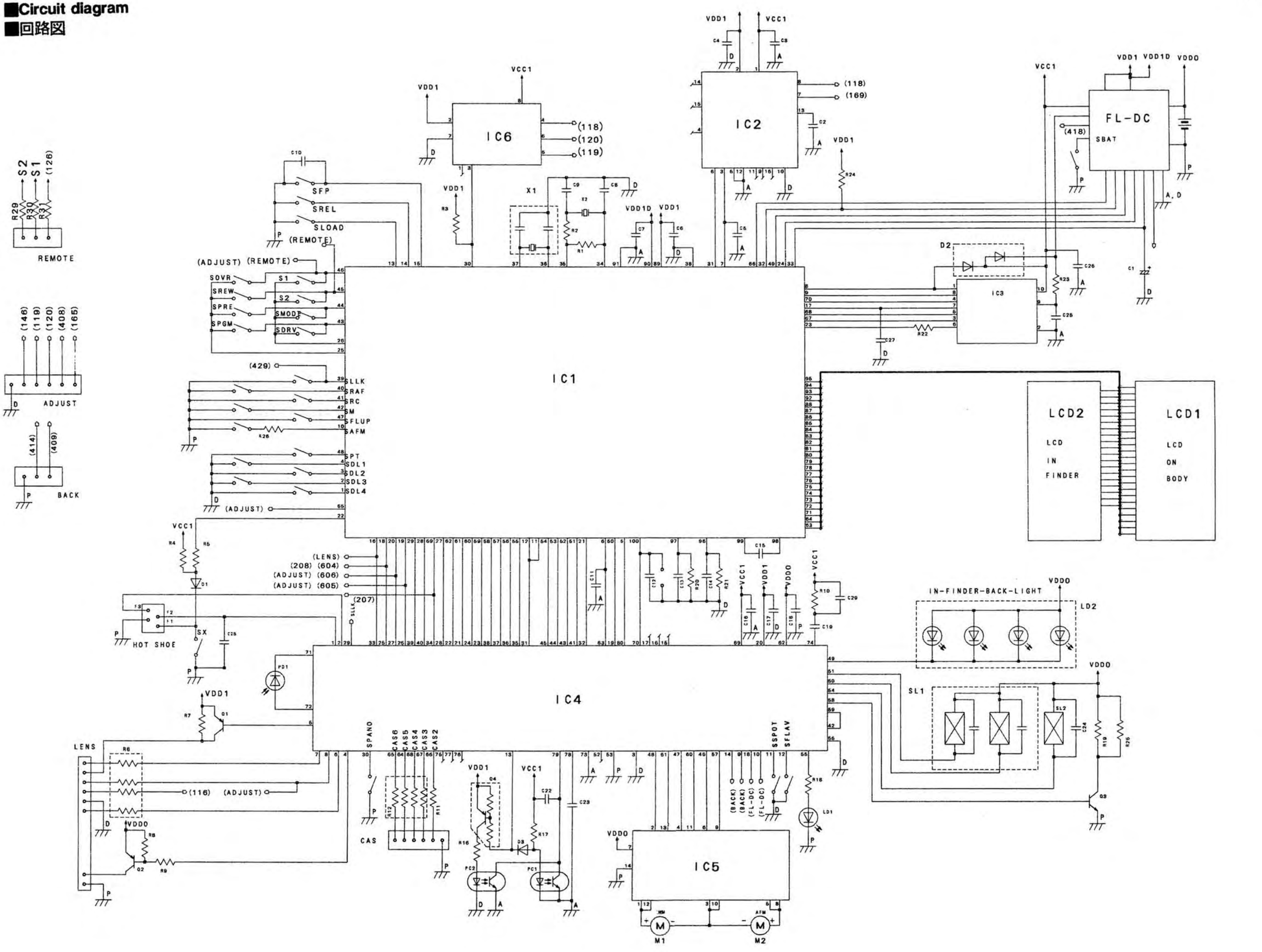

■Circuit diagram (Flash Converter PCB)
■回路図（フラッシュコンバーター基板）

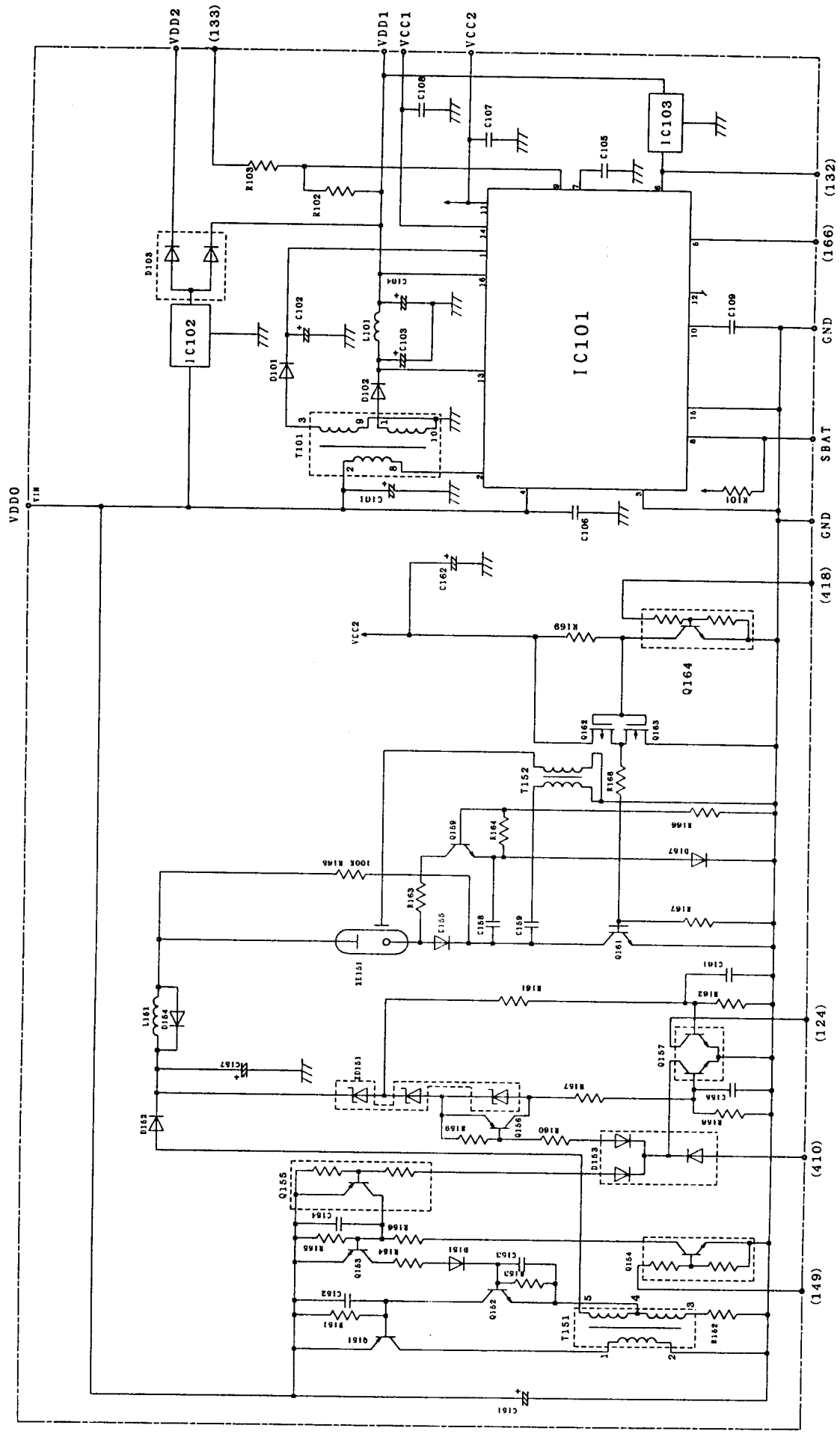

■Adjustment/check required after repair

☆ : Check required after repair
★ : Adjustment required after repair

ADJUSTMENT/CHECK	Mirror Box Assy		Shutter Unit	Aperture Base Plate Unit	FPC–A Assy	FPC–B Set	Penta–Prism Assy	AF Motor Base Unit	Top Cover Assy	XE Tube	Flash Converter PCB Set
	Removed	Replaced	Replaced	Replaced	Replaced	Replaced	Replaced	Replaced	Replaced	Replaced	Replaced
Body back	☆	★	☆	★	☆	☆		★			
Viewfinder back		☆					☆				
Manual set SS		★	★		★						
Aperture preset		☆		★	★						
AE		☆	★		★		☆				★
Flash level		★			★				★	★	★
Pre–flash level					★				★	★	★
Wireless flash level					★				★	★	★
AF	☆	★	★	★	☆	★	★	☆			★
B. C.–lock voltage					★						★

■Preparation Before Adjustment–1

■Equipments required

: Luminance Source
: Shutter Tester
: EE Tester
: 1000mm Collimator
: Digital Multimeter
: Strobe Tester
: Master Lens
: Xi–series PROGRAM/MAXXUM FLASH
: DC Power Supply
: Guide No. Adjusting Jig
: 2CR5 Type Power Supply Adapter
: 2CR5 Type Power Supply Adapter for B. C. Adjustment
: HIT Controller
: ROM PACK for 2092
: Contact Jig–C for HIT
: I/F BOX for HIT
: Body Signal Adapter (with X–contact)
: AEF Signal Adapter Ⅳ
: X Cable
: Body Back Gauge
: Body Back Flat Plate–A
: Dial Gauge
: Reflection Paper
: Hexagon Wrench (ϕ1.5)
: Film (Kodacolor GOLD 100 exposed in a room for more than 1 day)

※Jig numbers and models are listed in Tools and Instrument (P. 40).

■Instruction for using HIT system

※Make sure that no battery is installed in camera before setting up the HIT system.

1. Set up the equipments as in Fig. 1.
2. Attach HIT Contact Jig–C so its probes contact with the check lands of the camera, then affix them with magic tape.
3. Insert a battery or connect 2CR5–Type Power Supply Adapter to the camera, then turn the camera and HIT Controller on. Main menu appears in LCD (Fig. 2).
4. Select an item using Control Pad so the selected item will appear in a black box. Then press SELECT Button to enter.

   ※After setting up the equipments, perform "LCD Displays Check" (P. 34) and check for correct connection.

■Fig. 1

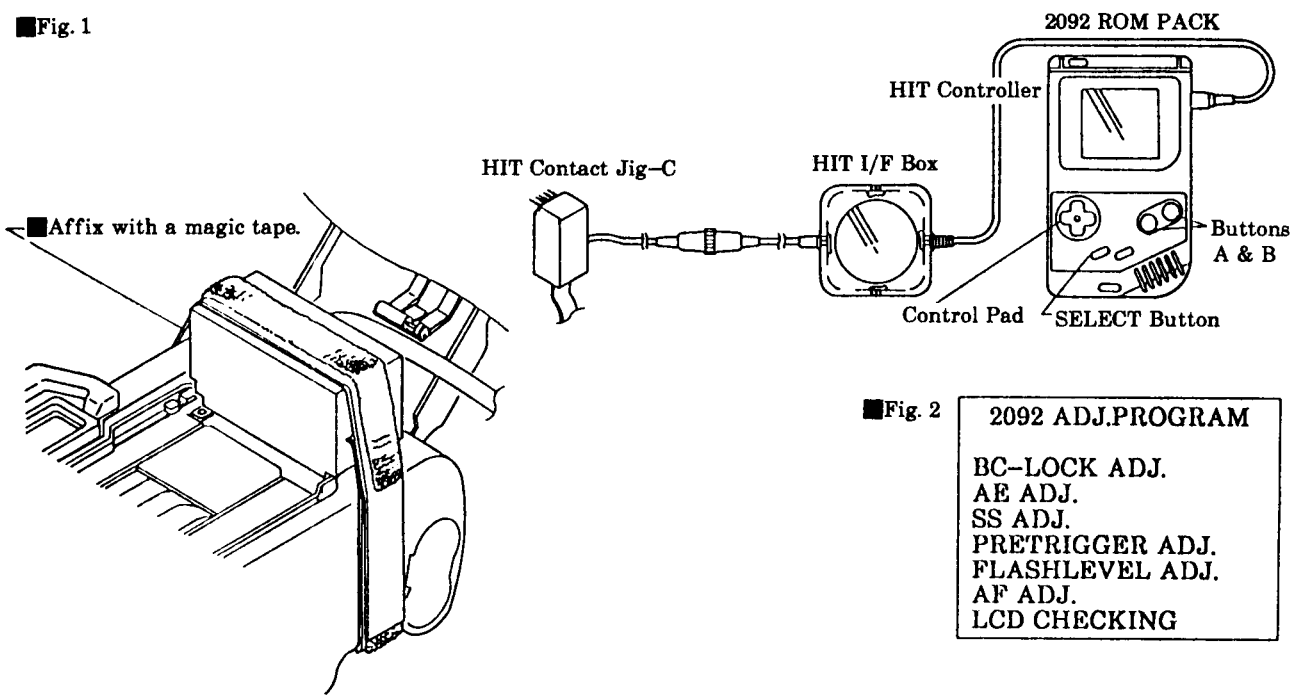

■Fig. 2

2092 ADJ.PROGRAM
BC–LOCK ADJ.
AE ADJ.
SS ADJ.
PRETRIGGER ADJ.
FLASHLEVEL ADJ.
AF ADJ.
LCD CHECKING

■Body Back Adjustment– I

■Equipments required

: Body Back Gauge
: Body Back Flat Plate–A
: Dial Gauge

■Check

1. Set Dial Gauge as in Fig. 1.
2. Measure distance between guide rail and bayonet mount surface (body back) as in Fig. 2.
3. Check that the reading is within the standard range below.
   ※If not, adjust the body back as follows.

■Adjustment

1. Adjust Body Back as follows:
   - To increase Body Back: Add Adjustment Washer (s) beneath the bayonet mount.
   - To decrease Body Back: Replace the Bayonet Mount with the one for service #2072–1010–71 (*), and install/remove the Adjustment Washers.
     *Bayonet Mount #2072–1010–71 is 0.1mm thinner than that of #2072–1010–11.
2. Perform Body Back Adjustment– II (P. 22).

Standard: 44.675 – 44.730

■BB Adjustment Washer

	Parts No.	T=(mm)
A	2092–1014–01	0.05
B	2092–1015–05	0.08
C	2092–1016–05	0.1
D	2092–1017–04	0.12
E	2092–1018–05	0.15
F	2092–1019–05	0.2

■Fig. 1

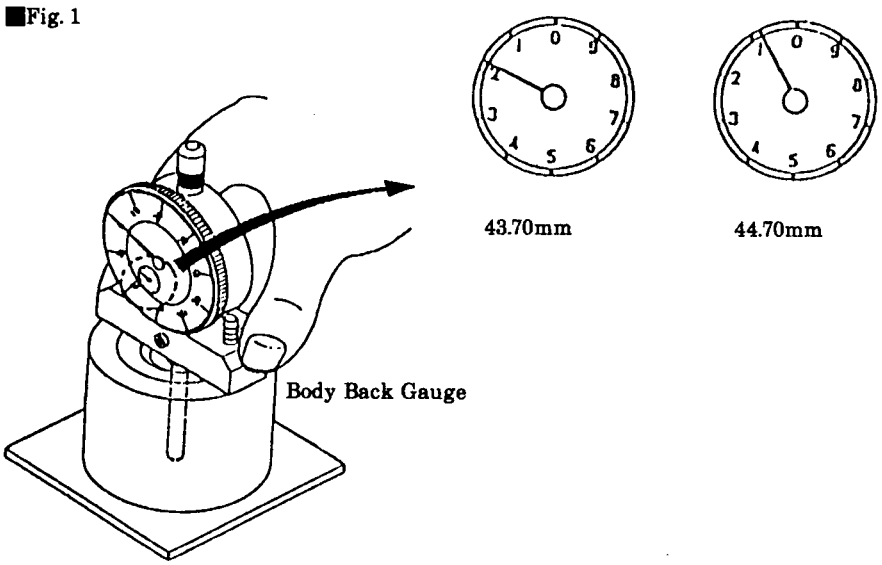

■Fig. 2

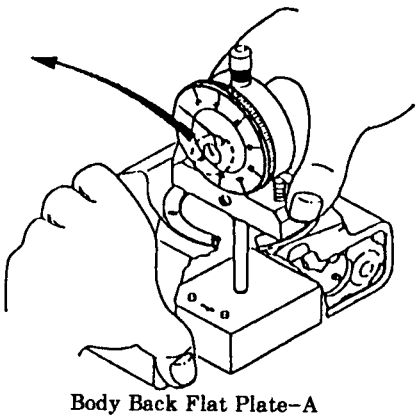

■Body Back Adjustment– II

※Body Back Adjustment– I (P. 21) should be completed before starting.

■Equipments required
: HIT Controller
: 2092 ROM PACK
: HIT Contact Jig–C
: HIT I/F BOX

■Adjustment
1. Set the equipments as in Fig. 1
2. Select "AF ADJ."in the main menu with Control Pad, and press SELECT Button.
3. Select "B.B. ADJ." in AF adjustment menu, and press the SELECT Button.
4. Press Shutter–Release Button partway down.
   ※Previous Body–back value before adjustment (P. 21) is displayed.
5. Select the number (body–back value) using Control Pad. And press upper/lower Control Pad to set the body–back value adjusted in Body Back adjustment– I (P. 21).
   ※The number changes in 0.002–stop increments by each press of the Control Pad.
6. Press SELECT Button.
7. Press Shutter Release Button partway down. "COMPLETE" appears.
8. Press SELECT Button so the displays are replaced with the AF adjustment menu.

■Fig. 1

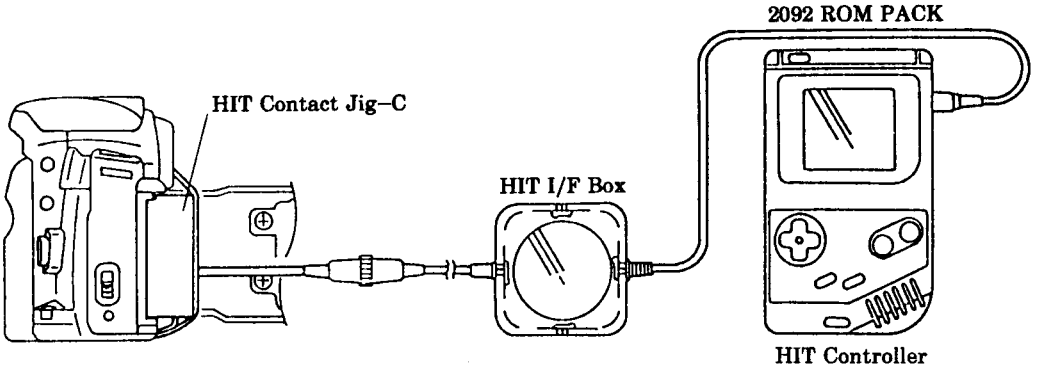

■Viewfinder Back Adjustment

■Equipments required
: 1000mm Collimator
: Master Lens
: Hexagon Bar Wrench (ϕ1.5)

■Check
1. Set the camera so that the chart aligns at the center of Viewfinder, then set Master Lens' Focus Ring to infinity position. (Fig. 1)
2. Check that the chart is in focus.
※If not, adjust mirror position as follows.

■Adjustment
3. Remove the lens from the camera.
4. Holding the mirror up with a finger, move VB Adjuster with Hexagon Bar Wrench up and down so that the chart is in focus.
5. Release the shutter several times, then turn the lens' Focus Ring until it stops at infinity, and check that the chart is in focus.

■Fig. 1

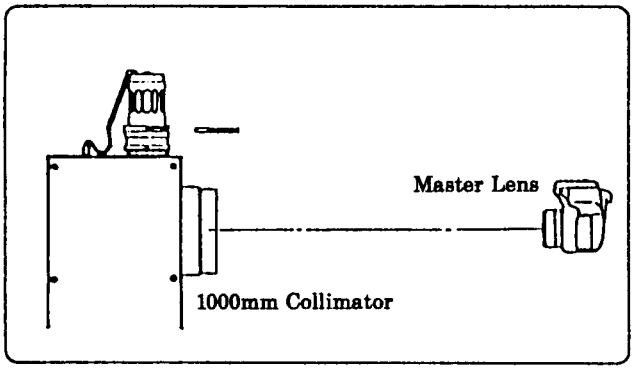

■Fig. 2

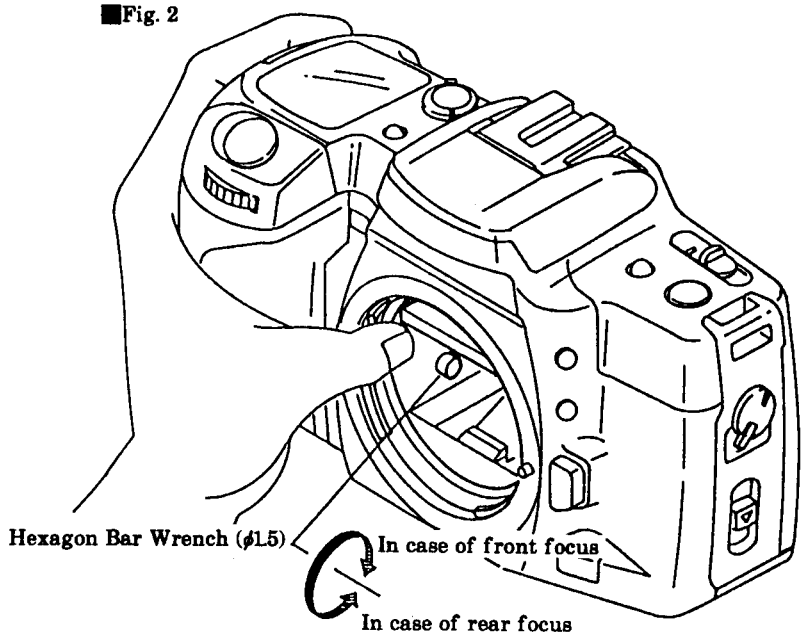

■Hold the mirror up with a finger as shown to adjust viewfinder back.

■Manual SS & X–Sync. Time–Lag Check

■Equipments required

: Shutter Tester
: Body Signal Adapter (with X–contact)
: X–Cable
: AEF Signal Adapter Ⅳ

■Manual SS Check

1. Set the equipments as in Fig. 1.
2. Check that the reading is within the tolerance in Table–1.

■X–sync. Time–Lag Check

1. Set the camera to Shutter Tester as in Fig. 2.
2. Check that X–sync. time lag is within the standard in Table–2.

■Fig. 1

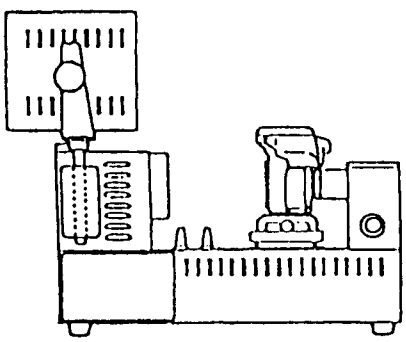

■Fig. 2

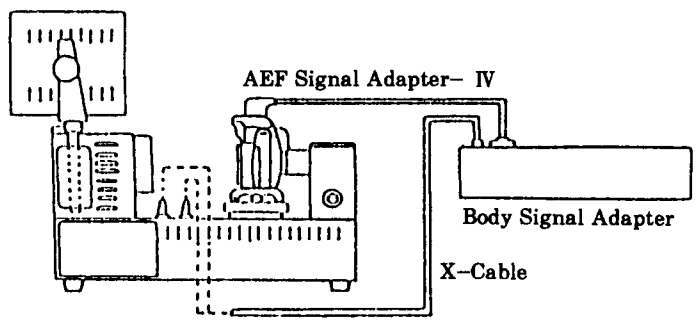

Table–1

SS	Reference value at range–B (ms)	Tolerance at range–B (ms)	Exposure unevenness
1/2000	0.488	0.311 to 0.766	Difference between max. and min. of range–A, –B, –C should be 0.6EV or smaller
1/1000	0.977	0.667 to 1.430	
1/125	7.81	6.34 to 9.62	
1/2	500	467 to 536	

Table–2

SS	Measured item	Standard (ms)
1/90	X–contact delay time	0.4 to 0.9
	From X–contact on to 2nd curtain appearance	2.4 or more

■AE Level Check

■Equipments required
: Luminance Source
: EE Tester
: Master Lens

■Check
1. Set the camera and equipments as in Fig. 1.
2. According to the table below, measure each exposure value with the designated camera setting.
3. Check that all exposure values are within the standard range.
※For Luminance Source MODEL L–222 or L–223, apply figures in the brackets ( ).

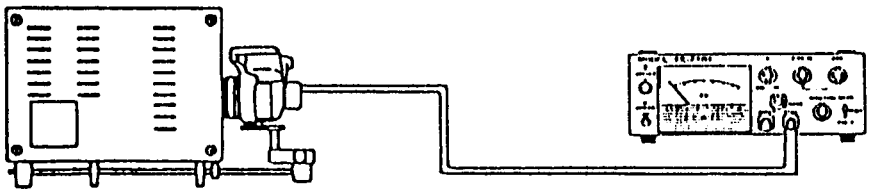

Luminance Source:
K value: 1.3
Luminance: Set as in Table.
Camera:
ISO: 100
Exposure mode: Set as in Table.
Focus mode: M
Master Lens:
Focus Ring: ∞
EE Tester:
K value: 1.3
ASA: 100

Order	Luminance	Exposure mode	Shutter speed	Aperture	Tolerance
1	EV6 (EV5)	A	----	F5.6 (F8)	0±1.0EV
2	EV10 (EV11)				
3	EV15 (EV15)				
4	EV6 (EV5)	P	----	----	
5	EV10 (EV11)				
6	EV15 (EV15)				
7	EV10 (EV11)	S	1/125	----	
8			1/30		

■Aperture Control Check

■Equipments required
: Luminance Source
: EE Tester
: Master Lens

■Check
1. Set the camera and equipments as in Fig. 1.
2. Release the shutter to check the pointer of EE Tester indicates 0±0.3EV.
※Reading may be above/below this range depending on the lens' aperture tolerance.

Standard: 0±0.3EV

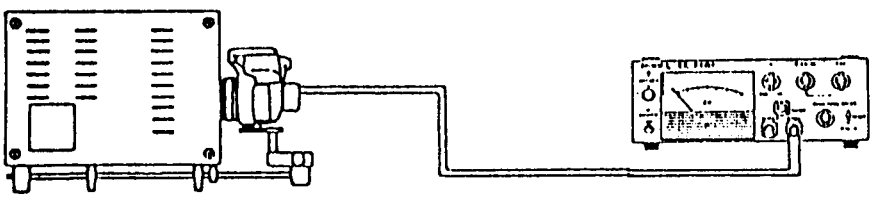

Luminance Source:
K value: 1.3
Luminance: EV 11
Camera:
Exposure mode: M
Aperture: f/5.6
Shutter speed: Bulb
Focus mode: M
Master Lens:
Focus Ring: ∞
EE tester:
K value: 1.3
F value: 5.6
ASA: F
MEAS/CALF: CALF

■Flash Level Check

■Equipments required

: Strobe Tester
: Master Lens
: xi–series PROGRAM/MAXXUM FLASH
: Reflection Paper
: Film (Kodacolor GOLD100; exposed in a room for more than one day)

■Check

※Perform this check in a dark room.

1. Set the camera and equipments as in Fig. 1.
2. Turn the flash on and confirm Flash–Ready Signal glowing.
3. Hold Strobe Tester beside the camera (Fig. 1). And looking through the viewfinder of Strobe Tester, align eye point in the viewfinder to the center of Reflection Paper.
4. Press Strobe Tester's measuring button to set the tester to the stand by condition ("NON.C" blinks.), then release the shutter.
5. Check that the reading of Strobe Tester is within standard range (F5.6±0.5EV).

Standard: F5.6±0.5EV

■Fig. 1

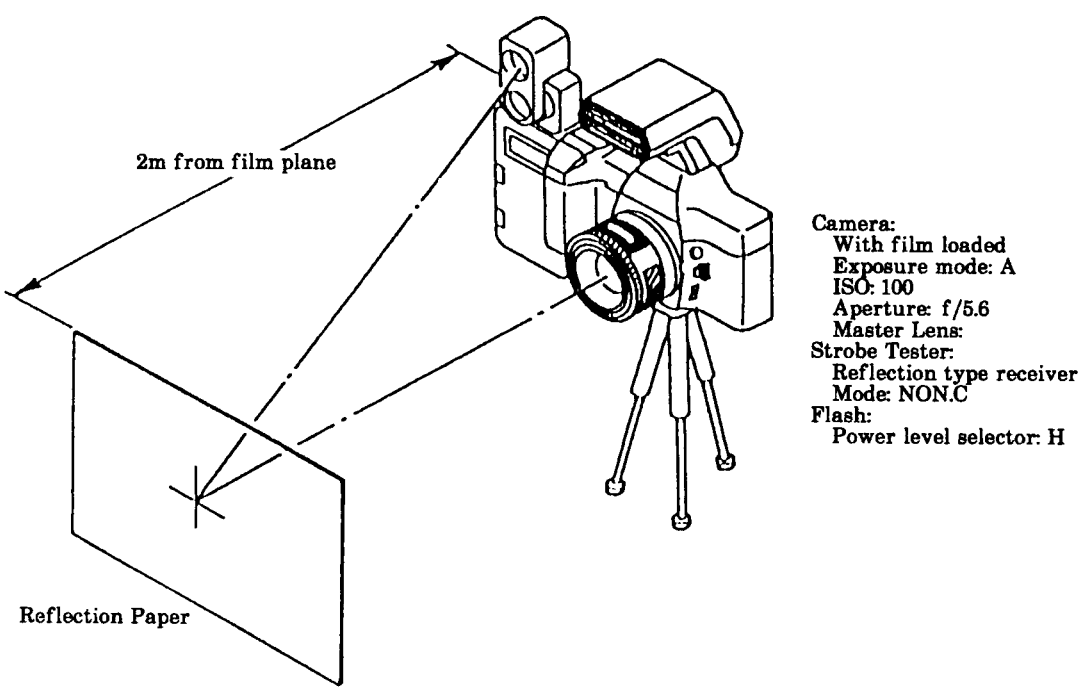

■Level and align center of Reflection Paper and optical axis of lens.

■Manual Set SS Adjustment

※Perform this adjustment before Aperture Preset Adjustment (P. 28).

■Equipments required
: Shutter Tester
: HIT Controller
: 2092 ROM PACK
: HIT Contact Jig–C
: HIT I/F Box

■Check
1. Set the camera to Shutter Tester. (Fig. 1)
   ※The camera's SPC–2 Holder may be in the way of Shutter Tester's light receptor.
   Set the camera off center so that the light receptor is not obstructed by the SPC–2 Holder.
2. Set shutter speed to 1/2000 sec. and release the shutter several times. Calculate center value of the range–B.
   ※If the center value is out of standard, perform adjustment as follows.

■Adjustment
3. Set the equipments as in Fig. 2.
4. Select "SS ADJ." in the main menu with Control Pad, then press SELECT Button.
5. Select "536" using Control Pad.
6. Set the center value (μS) obtained at procedure 2 using Control Pad and Button A or B, then press SELECT Button.
   • Setting in 8μS–stop: Press upper/lower Control Pad while pressing and holding Button A.
   • Setting in 104μS–stop: Press upper/lower Control Pad while pressing and holding Button B.
7. Press Shutter Release Button partway down. "COMPLETE" appears.
8. Press SELECT Button. Displays are replaced with the main menu.

■Fig. 1

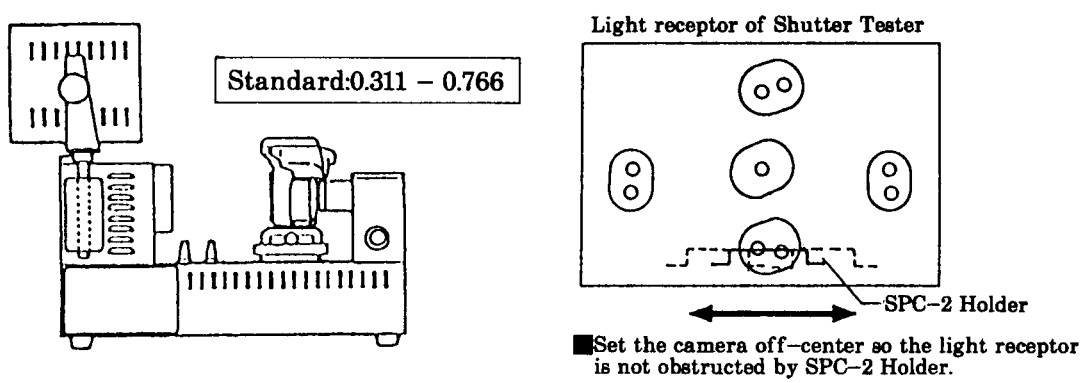

■Set the camera off–center so the light receptor is not obstructed by SPC–2 Holder.

■Fig. 2

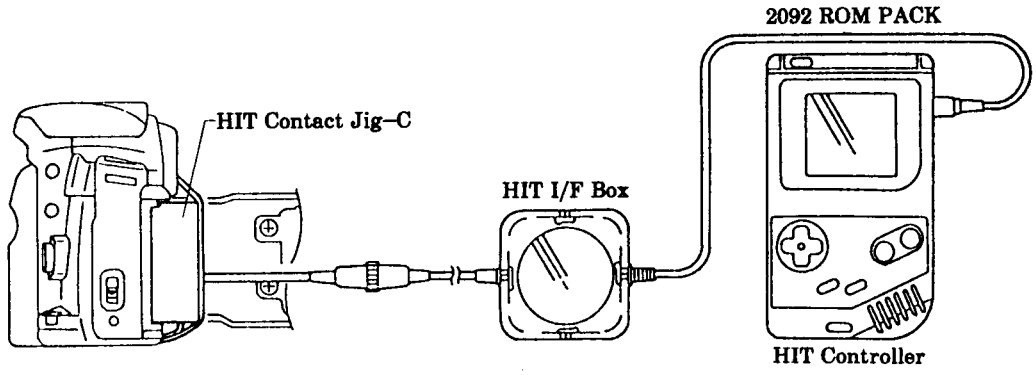

■Aperture Preset Adjustment

※Manual set SS adjustment (P. 27) should have been completed.
Built–in flash should be down.

■Equipments required

: Luminance Source
: EE Tester
: Master Lens
: HIT Controller
: 2092 ROM PACK
: HIT Contact jig–C
: HIT I/F BOX

■Adjustment

1. Set the equipments as in Fig. 1.
2. Select "PRETRIGGER ADJ." in the main menu with Control Pad, and press SELECT Button.
3. Check that the built–in flash is down, and set Luminance Source to EV10, then press SELECT Button to enter.
4. Press Shutter–Release Button partway down. Shutter speed and aperture displays appear in both camera's and HIT controller's LCD. Check that they are the same.
5. Release the shutter and see whether the value in EE Tester is more or less than –0.35EV.
   - –0.35EV or more: Select "–0.35EV OR OVER", then press SELECT Button.
   - Less than –0.35EV: Select "UNDER –0.35EV", then press SELECT Button.
6. Release the shutter. Check that value in EE tester is changed by 0.5EV from the value obtained at procedure–5. If so, select "YES", and press SELECT Button. Displays are replaced with next measuring point.
   ※If the value is not changed by 0.5EV, select "NO", and press SELECT Button.
   Then repeat procedure–6 until you can select "YES".
7. Repeat procedure 4, 5, and 6 for four of the measuring points. (Fig. 2)
8. "COMPLETE" appears when adjustment is completed.
9. Press SELECT Button. Displays are replaced with the main menu.

■Fig. 1

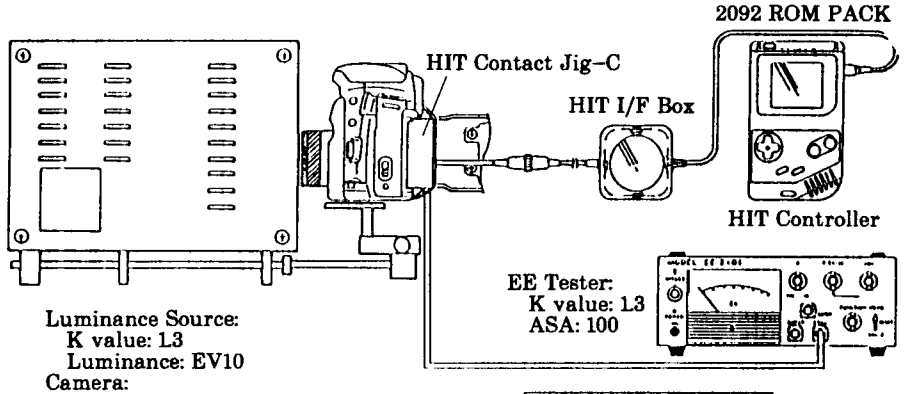

■Fig. 2

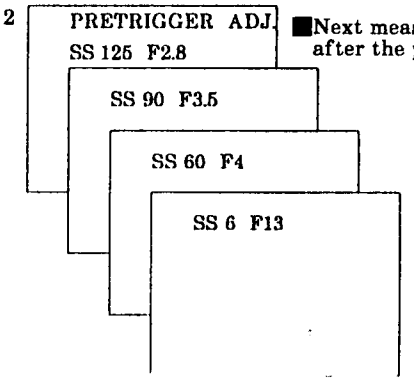

■Next measuring point appears after the procedure–6.

■AE Adjustment

■Equipments required
: Luminance Source
: Master Lens
: HIT Controller
: 2092 ROM PACK
: HIT Contact Jig–C
: HIT I/F BOX

■Adjustment
1. Set the equipments as in Fig. 1
2. Select "AE ADJ." in main menu using Control Pad, and press SELECT Button.
3. Select "AE ADJ." in AE adjustment menu using Control Pad, and press SELECT Button.
4. Set Luminance Source to EV6, and press SELECT Button.
   ※Panorama model (–600) should be set to normal frame.
5. Press Shutter–Release Button partway down.
6. Set Luminance Source to EV15, and press SELECT Button.
7. Press Shutter–Release Button partway down.
8. Select panorama or normal model as follows.
   ※For –600 model:
   ①Select "PANORAMA MODEL", and press SELECT Button.
   ②Set Luminance Source to EV15, press SELECT Button.
   ③Set the camera to panorama frame.
   ④Press Shutter–Release Button partway down.
   "COMPLETE" appears when adjustment is completed.
   ※For other models
   ①Select "NORMAL MODEL", and press SELECT Button.
   "COMPLETE" appears when adjustment is completed.
9. Press SELECT Button. Displays are replaced with the AE adjustment menu.

■Check
10. Select "AE CHECK" in the AE adjustment menu with Control Pad, and press SELECT Button.
11. Set Luminance Source to EV10.
12. Press Shutter–Release Button partway down. Displays as Fig. 2 appears.
13. Check that value in each cell is within ±0.3 EV to the Luminance Source setting. (Fig. 2)
    ※Also check with EV6 and EV15.
14. Press SELECT Button. Displays are replaced with the AE adjustment menu.

■Fig. 1

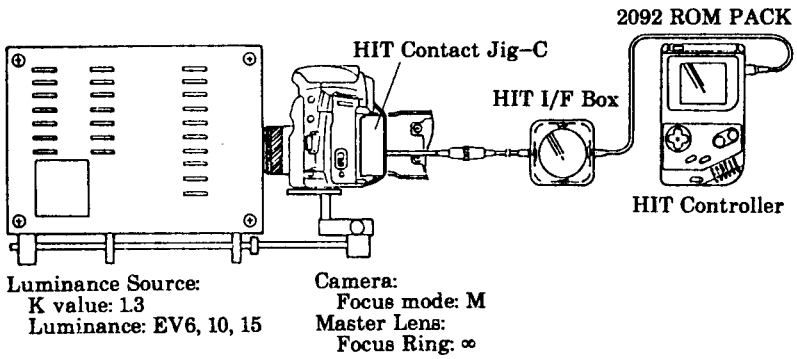

■Fig. 2

Example: EV10

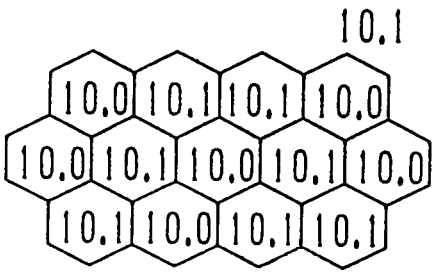

■Flash Level Adjustment

■Equipments required
: Luminance Source
: Master Lens
: HIT Controller
: HIT Contact Jig–C
: HIT I/F BOX
: 2092 ROM PACK
: Reflection Paper

■Adjustment
1. Set the equipments as in Fig. 1.
2. Select "FLASH LEVEL ADJ." in main menu with Control Pad, press SELECT Button.
3. Select "FLASH LEVEL ADJ." in flash level adjustment menu with Control Pad, press SELECT Button.
4. Set Luminance Source to EV10. And press SELECT Button.
5. Press and hold Shutter–Release Button partway down until "COMPLETE" appears. Shutter is automatically released five times before the "COMPLETE" appears.
6. Press SELECT Button. Displays are replaced with the flash level adjustment menu.

■Check
7. Select "FLASH LEVEL CHECK" in the flash level adjustment menu using Control Pad, and press SELECT Button.
8. Set Luminance Source to EV10. Press SELECT Button.
9. Press and hold Shutter–Release Button partway down until "COMPLETE" appears. Shutter is automatically released three times before the "COMPLETE" appears.
※Check that the reading at either of ISO 50, 100 and 400 is within ±0.4EV. (Fig. 2)
10. Press SELECT Button. Displays are replaced with the flash adjustment menu.

■Fig. 1

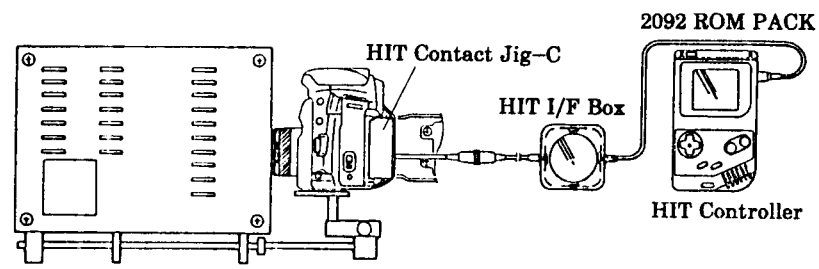

Luminance:
K value: L3
Luminance: EV10
Camera:
Focus mode: M
Master Lens:
Focus Ring: ∞

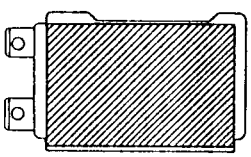

■Attach a Reflection Paper to a Pressure Plate to be discarded.
And hold them at the camera back on film plane.

■Fig. 2

FLASH LEVEL CHECK	
COMPLETE	
50	–0.18EV
100	–0.18EV
400	–0.18EV
MENU	

■Pre–Flash Level Adjustment

■Equipments required

: Strobe Tester
: Guide No. Adjusting Jig
: HIT Controller
: HIT Contact Jig–C
: HIT I/F Box
: 2092 ROM PACK

■Check

1. Set the equipments as in Fig. 1.
2. Select "FLASH LEVEL ADJ." in the main menu using Control Pad, and press SELECT Button.
3. Select "PREFIRE ADJ." in flash level adjustment menu using Control Pad, and press SELECT Button.
4. Press Shutter–Release Button partway down.
5. Select "FIRE" with Control Pad, and press SELECT Button.
6. Press Shutter–Release Button partway down so built–in flash fires.
   Check that reading in Strobe Tester is within standard range.
   ※If not, perform adjustment as follows.

■Adjustment

7. Press Control Pad at the right or left to adjust flash output.
   • To increase flash output: Press the right of Control Pad.
   • To decrease flash output: Press the left of Control Pad.
8. Repeat procedure 5, 6, and 7 until the reading meets the standard.
9. Select "MENU" with Control Pad and press SELECT Button. Displays are replaced with the flash level adjustment menu.

Standard range: F0.8+0.2 to F11+0.2

■Fig. 1

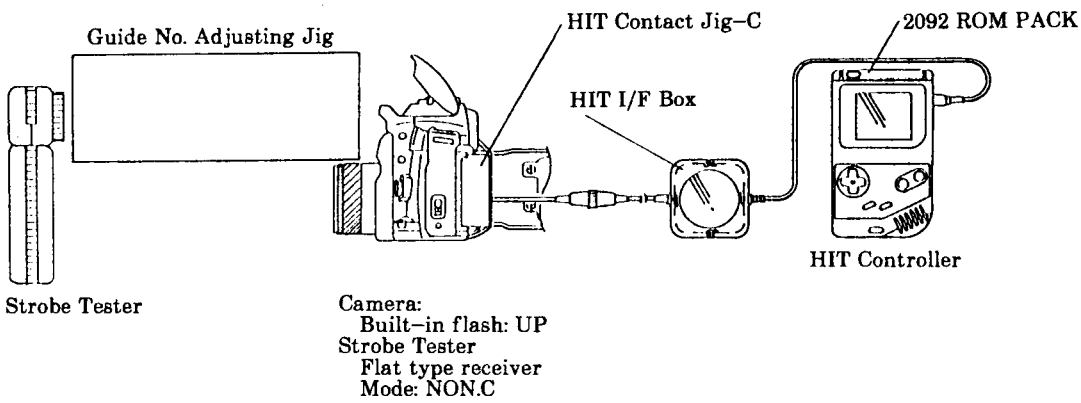

■Wireless Flash Level Adjustment

■Equipments required

: Strobe Tester
: Guide No. Adjusting Jig
: HIT Controller
: HIT Contact Jig–C
: HIT I/F BOX
: 2092 ROM PACK

■Check

1. Set the equipments as in Fig. 1.
2. Select "FLASH LEVEL ADJ." in main menu using Control Pad, and press SELECT Button.
3. Select "W–LESSFIRE ADJ." in flash level adjustment menu using Control Pad, and press SELECT Button.
4. Press Shutter Release Button partway down.
5. Select "FIRE" with Control Pad, and press SELECT Button.
6. Press Shutter–Release Button partway down so that the built–in flash fires. Check that reading in Strobe Tester is within standard range.
   ※If not, perform adjustment as follows.

■Adjustment

7. Press the right or left of Control Pad to adjust flash output.
   • To increase flash output: Press the right of Control Pad.
   • To decrease flash output: Press the left of Control Pad.
8. Repeat procedure 5, 6, and 7 until the reading meets the standard.
9. Select "MENU" with Control Pad, and press SELECT Button. Displays are replaced with the flash level adjustment menu.

Standard F2.8 to F4

■Fig. 1

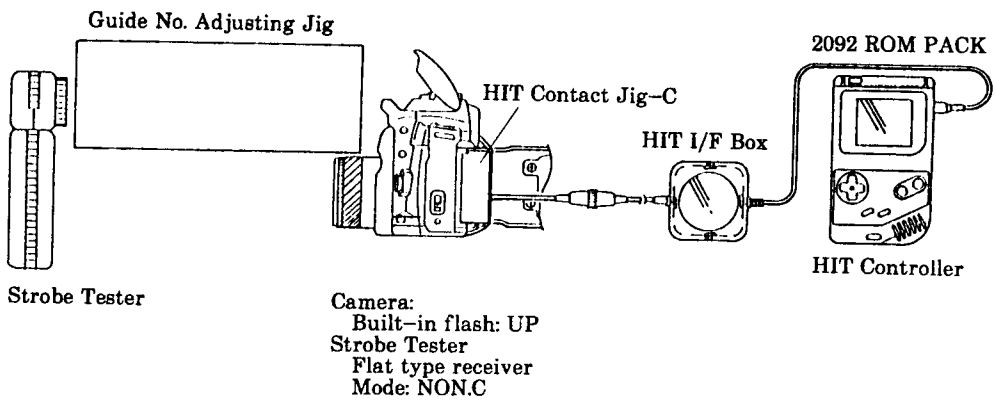

■B. C. Lock Voltage Adjustment

■Equipments required

: DC Power Supply
: Digital Multimeter
: 2CR5 Type Power Supply Adapter for B.C. Adjustment
: HIT Controller
: HIT Contact Jig–C
: HIT I/F BOX
: 2092 ROM PACK

■Adjustment

1. Set the equipments as in Fig. 1.
2. Select "BC–LOCK ADJ."in main menu using Control Pad, and press SELECT Button.
3. Press SELECT Button, then Shutter–Release Button partway down.
4. Set DC Power Supply to 5.05V, and press SELECT Button.
5. Press Shutter–Release Button partway down twice. "COMPLETE" appears.
6. Select "MENU" with Control Pad, and press SELECT Button. Displays are replaced with main menu.

■Check

7. Check that B.C. lock operates at the standard voltage as below.

Standard voltage: 4.75V

■Fig. 1

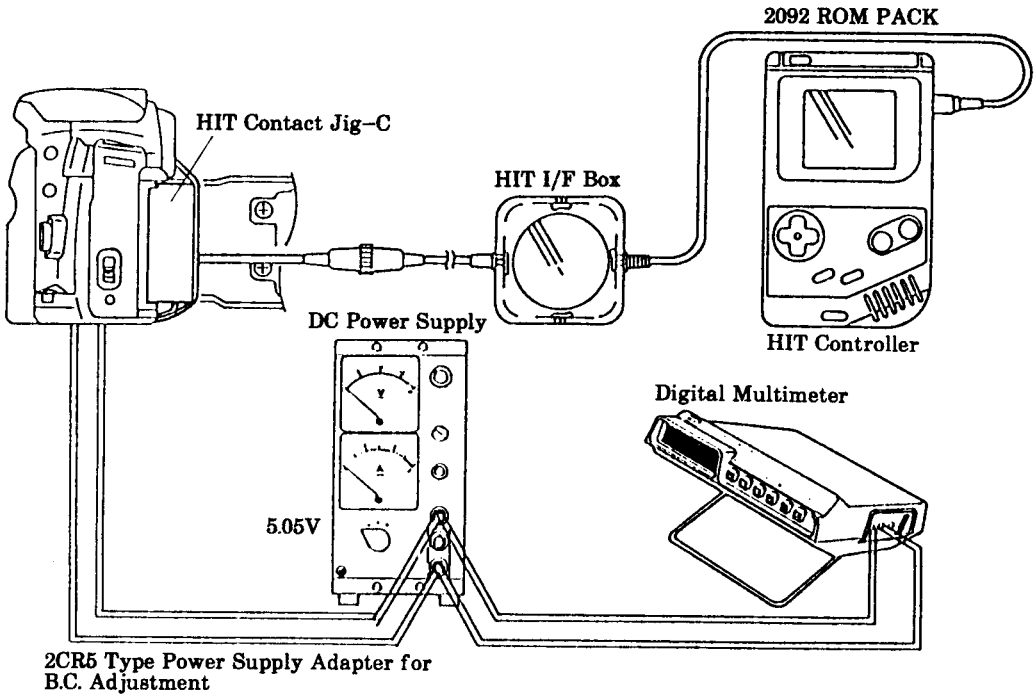

■LCD Displays Check

■Equipments required
: HIT Controller
: HIT Contact Jig–C
: HIT I/F BOX
: 2092 ROM PACK

■Check
1. Set the equipments as in Fig. 1.
2. Select "LCD CHECKING" in main menu using Control Pad, and press SELECT Button.
3. Press Shutter–Release Button partway down. All displays appear in Body Data Panel.
4. "COMPLETE" appears in LCD of HIT Controller.
5. Press SELECT Button so that displays are replaced with the main menu.

■Fig. 1

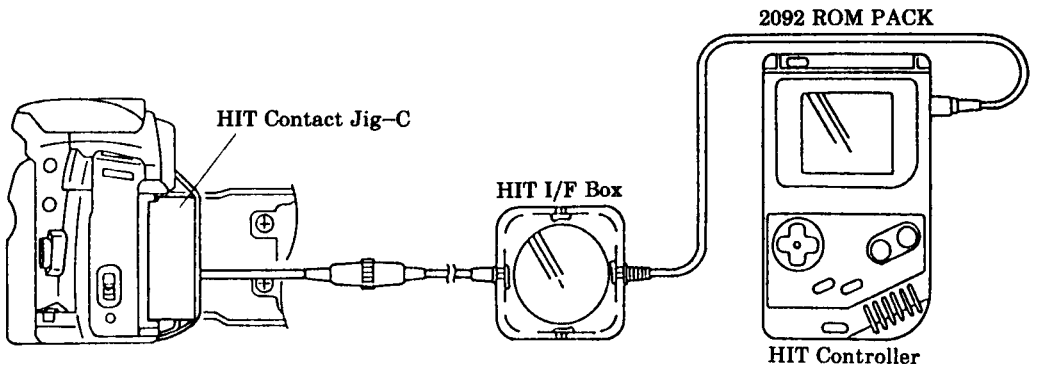

■Preparation Before Adjustment–2 (AF adjustment)

※Always perform adjustment ① to ③ (P. 36 – 38) when you replace FPC–A, FPC–B, or parts attached to Mirror Box as well as when you receive complaints about poor focusing.

■Items to be confirmed before AF adjustment

※Check the following before starting AF adjustments.

1. Body Back and Viewfinder Back are correctly adjusted.
2. All external parts except for Bottom Cover are installed.
3. If CCD sensor module is out of position after replacing FPC–B, tighten three AF adjusting screws #2089–5051 until they stop, then evenly lcosen them by 1.14 turns (0.4mm).

■Equipments required

※See "Tools & Instruments (P. 40) for model and jig numbers.

: 1000mm Collimator
: AF Master Lens
: AF Chart– Ⅶ for 2085
(See P. 29 of 2085 Service Manual.)
: AF Chart Ⅷ
: HIT Controller
: 2092 ROM PACK
: HIT Contact Jig–C
: HIT I/F BOX
: AF–Y.P Adjuster
: AF Tripod Attachment Ⅱ
: Grip Ring
: Hexagon Bar Wrench (ϕ1.5) or Hexagon Screwdriver
: Flood Lamp
(having color temperature of about 2800°K)

■Fig. 1

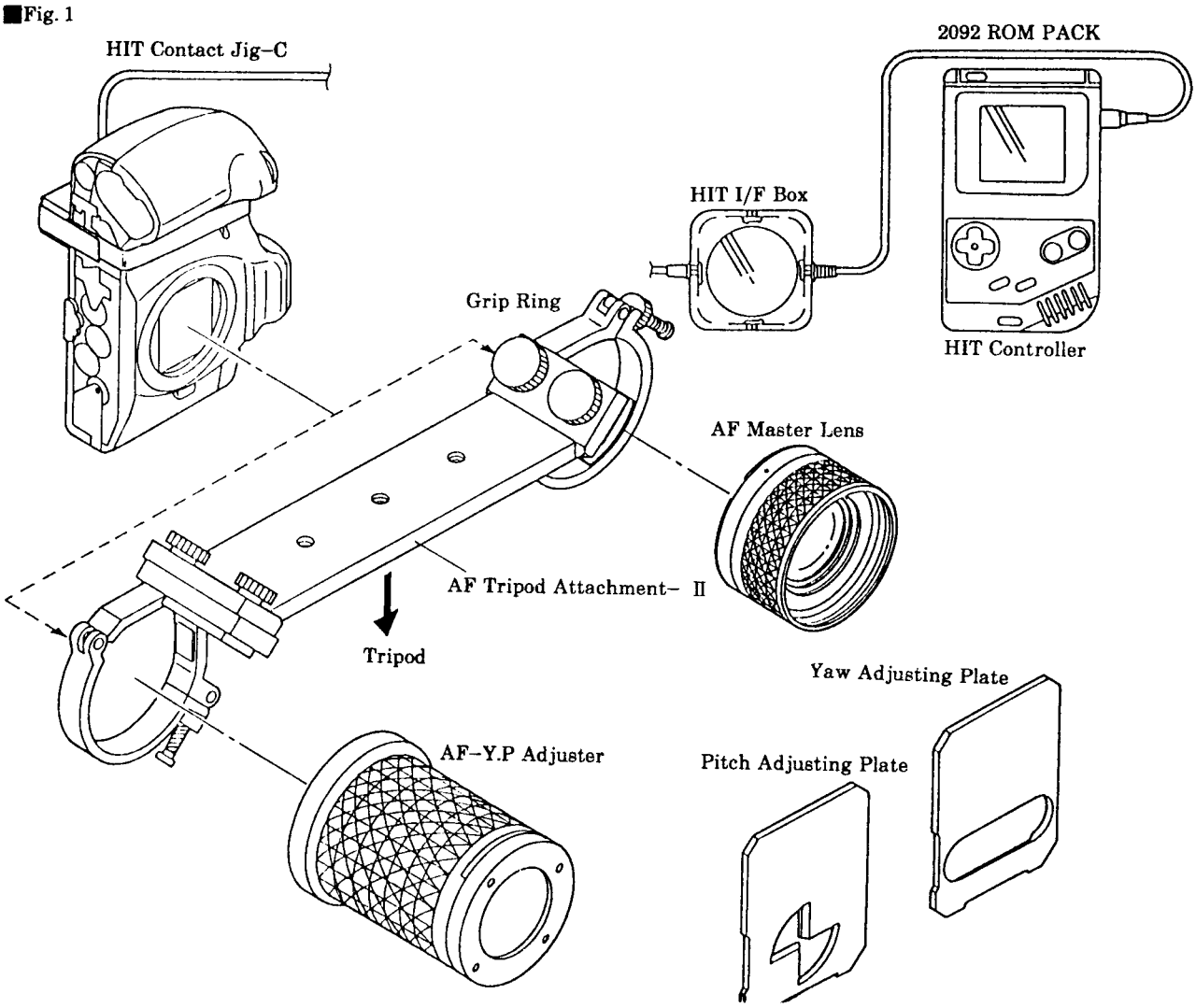

①AF Area Adjustment

■Check

1. Set up HIT system, and set camera and AF chart Ⅷ as in Fig. 1.
2. Select "AF ADJ." in main menu using Control Pad, and press SELECT Button.
3. Select "AREA ADJ." in AF adjustment menu using Control Pad, and press SELECT Button.
4. Press Shutter–Release Button partway down so wavy lines and value appear in display of HIT Controller. Check that the wavy lines are like the one in Fig. 2 and the value is within standard below. (Fig. 2)

※If not, perform adjustment as follows.

■Adjustment

5. Press SELECT Button. Displays are replaced with AF adjustment menu.
6. Set the camera's shutter speed to bulb, then adjust Sub Mirror position using Hexagon Bar Wrench (1.5) as in Fig. 3.

   ※Shutter cannot be released with the displays as Fig. 2.
7. Repeat procedure 3, 4, and 5 until the value is within the standard.
8. Press SELECT Button. Displays are replaced with the AF adjustment menu.

■Fig. 1

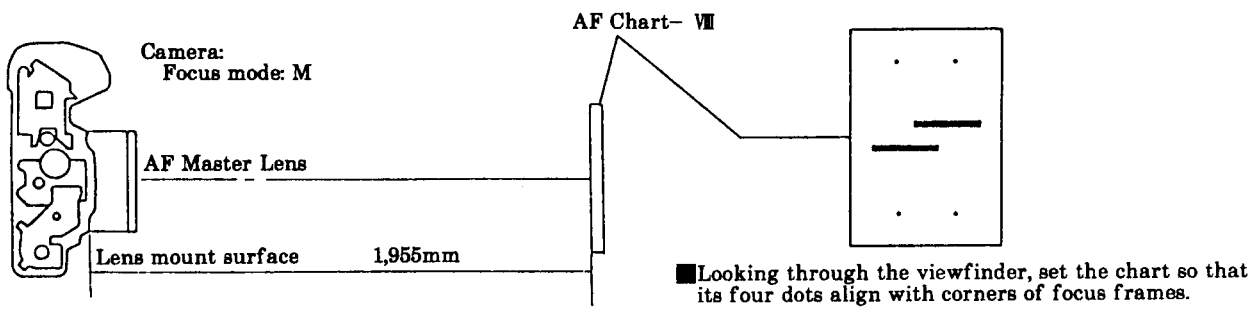

■Fig. 2

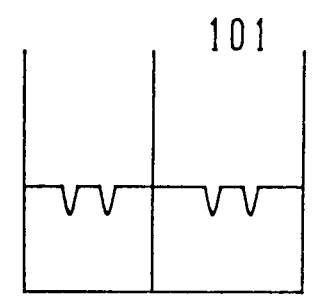

Standard: 100±4

■Fig. 3

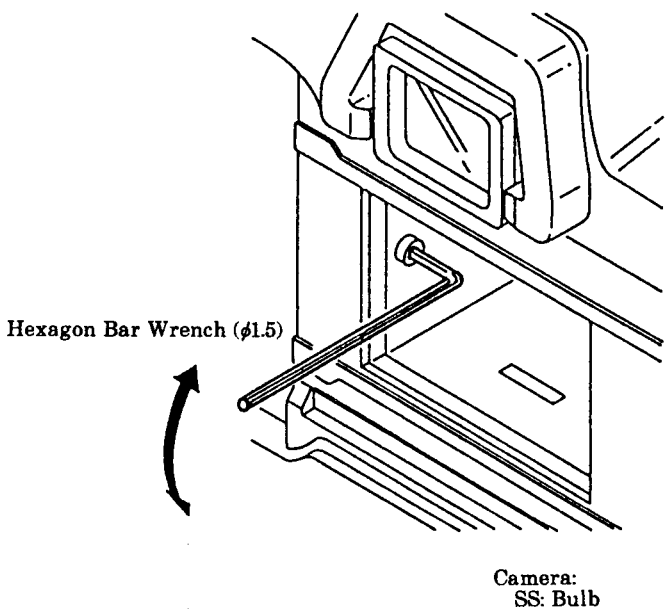

②Pitch, Yaw Adjustment

※Light up the camera with a flood lamp during Pitch, Yaw adjustment.

■Pitch adjustment

1. Insert Pitch Adjusting Plate to Y.P Adjuster. (Fig. 1)
2. Select "AF ADJ." in main menu using Control Pad, and press SELECT Button.
3. Select "PITCH,YAW ADJ." in AF Adjustment menu with Control Pad, and press SELECT Button.
4. Press Shutter–Release Button partway down.
5. Turn Pitch Adjusting Screw as in Fig. 4 so that the value in the HIT controller display is within standard range (0090–0110).

Standard: 0090 – 0110

■Yaw adjustment

6. Insert Yaw Adjusting Plate to Y.P Adjuster. (Fig. 3)
7. Turn Yaw Adjusting Screw as in Fig. 4 so that the value in the HIT Controller display is within standard range (0083–0110).
8. Press SELECT Button. The displays are replaced with AF adjustment menu.

Standard: 0083 – 0110

■Check

9. Check AF area referring to page 36. If required, perform "① AF area adjustment" and "② Pitch, Yaw adjustment" repeatedly until all readings meet standards.

■Fig. 1

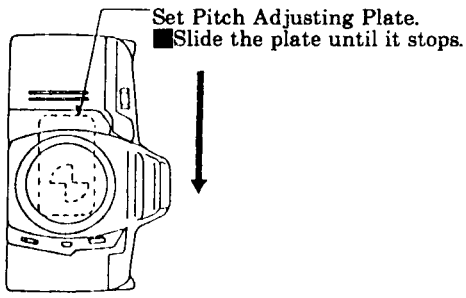

■Fig. 2

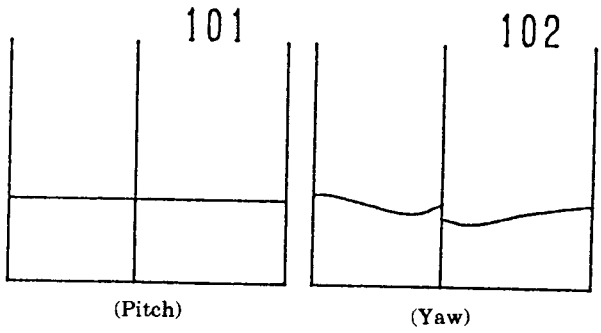

■Fig. 3

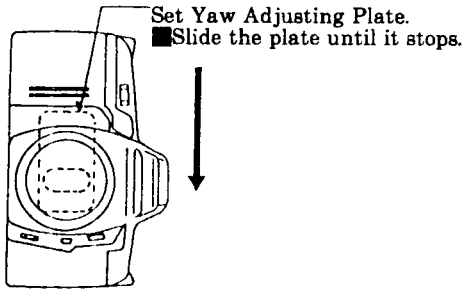

■Fig. 4

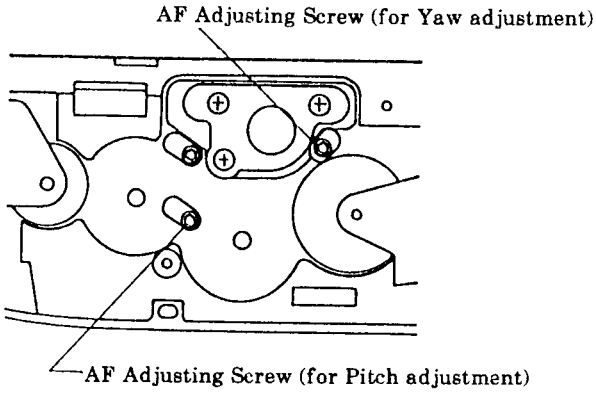

③EZ Adjustment

■Adjustment

1. Set up the HIT system, and set camera and AF chart– Ⅶ as in Fig. 1.
2. Select "AF ADJ." in main menu using Control Pad, and press SELECT Button.
3. Select "EZ ADJ." in AF adjustment menu using Control Pad, and press SELECT Button.
4. Looking through viewfinder, align the indicated point (※) of focus frame (Fig. 2) with measuring point I. Then press SELECT Button.
5. Press and hold Shutter–Release Button partway down until the next measuring point appears in the display.
6. Repeat procedure 4 and 5 for each measuring point of I to L. "COMPLETE" appears when all measuring points are adjusted.
7. Press SELECT Button. Displays are replaced with the AF adjustment menu.

■Check

8. Select "EZ CHECK" in the AF adjustment menu using Control Pad, and press SELECT Button.
9. Looking through viewfinder, align the indicated point (※) of Focus Frame (Fig. 2) with measuring point K. Then press SELECT Button.
10. Press Shutter–Release Button partway down. And check that the displayed value is within standard range (±30) (Fig. 3).
11. Press SELECT Button. Displays are replaced with the AF adjustment menu.

Standard: ±30

■Fig. 1

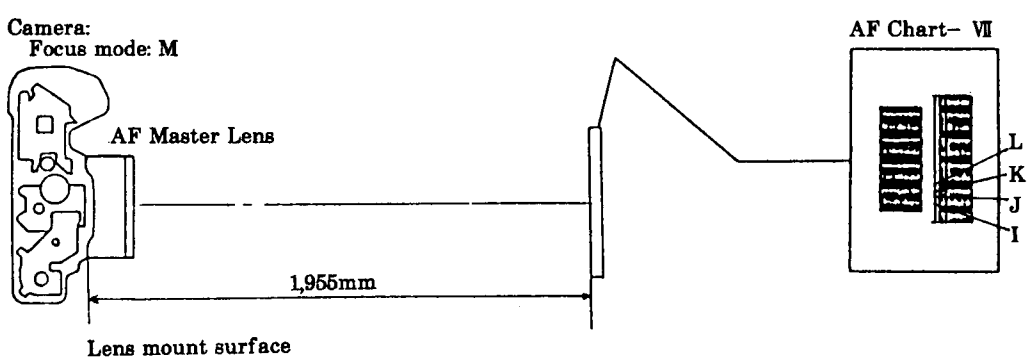

■Fig. 2

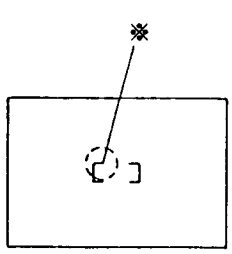

■Fig. 3

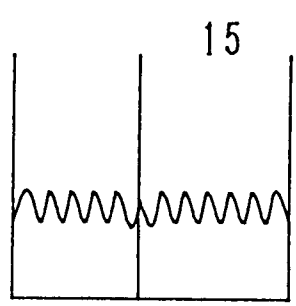

■Error Code on HIT Controller

■Error code list

Item	Error code	Meaning	Cause
B. C. lock voltage adjustment	10	Incorrect A/D conversion value at battery check	• Voltage is wrongly set. • Wrong resistance of Power Supply Adapter • Defective resistor or transistor for B. C. dummy current
AE adjustment	20	Picture frame (panorama/ normal) is wrongly set.	• Picture frame is wrongly set. • Defective SPANO
	21	Little difference between EV6 and EV15	• Luminance Source is wrongly set. • SPC disconnected.
Flash level adjustment	30	Incorrect flash level	• Luminance Source is wrongly set. • SPC disconnected. • Reflection Paper isn't set. • Aperture operation failure
Pre–flash level adjustment	40	SFLD doesn't turn ON.	• Flash remains down. • SFLD disconnected
Wireless flash level adjustment			
Aperture preset adjustment	50	Aperture preset is out of standard.	• Defective Aperture Base Assy
EZ adjustment	61	Low contrast	• Chart is out of position. • Chart is too close/far. • Defective CCD

■Tools & Instruments

■Luminance Source
<MODEL L-2101, L-2111, *L-222, *L-223>
■EE Tester <MODEL EE-2101, EE-2111>
■Shutter Tester <MODEL S-2201, S-2101>
■1000mm Collimator <MODEL RC- Ⅲ ,* Ⅱ ,* Ⅰ >
■Digital Multimeter <MODEL 2506A, 2508>
■DC Power Supply <*524B, *524C, MTR18-2>
■Strobe Tester <MODEL ST- Ⅴ ,* Ⅳ ,* Ⅲ >
■xi-series PROGRAM/MAXXUM FLASH
■Master Lens <2072-0001-75>
■AF Master Lens <2072-0006-75>
■HIT Controller <7981-5001-01>
■ROM PACK for 2092 <7981-5001-56>
■Contact Jig-C for HIT <7981-5001-13>
■I/F Box for HIT <7981-5001-32>
■AF Chart- Ⅷ <2085-0001-75>
■AF Chart- Ⅶ for 2085 <2082-0003-75>
※Modified or 2085 (See P. 29, 2085 Service Manual.)
■Body Signal Adapter (With X-contact)
■AEF Signal Adapter <7981-2014-34>
■X-Cable <7981-2014-16>
■Guide No. Adjusting Jig <2082-0005-75>
■Motor Axis Spanner <2078-0421-75>
■2CR5 Type Power Supply Adapter
<7981-1018-51>
■2CR5 Type Power Supply Adapter for
B. C. Adjustment <7981-2203-02>
■AF Tripod Attachment Ⅱ <2072-0003-76>
■AF-Y.P Adjuster <2076-0006-75>
■Grip Ring <7983-9004-01>
■Mirror Remover <2071-5806-75>
■Mirror Positioner <2072-5151-75>
■Body Back Flat Plate-A <7982-2004-01>
■Body Back Gauge <7982-2002-01>
■Dial Gauge <7982-2001-11>
■Hexagon Bar Wrench (ϕ1.5)
■Hexagon Screwdriver <7983-1040-01>
■Reflection Paper <7981-3001-51>
■Flood Lamp
(having color temperature of 2800°K.)
■Film (Kodacolor GOLD 100, exposed in a room
for more than one day)
(*Production ceased)

■Subsidiary materials

■Grease
: G-75 <7984-1075-01>
: G-85 <7984-1085-01>

■Adhesive
: B-10 <7984-2010-01>
: B-50 <7984-2050-01>
: B-60 <7984-2060-01>

CHECK LIST

1. This CHECK LIST describes the quality of operation warranted to general users.
   When users inquire about quality or request inspection, refer to this CHECK LIST.
   Use this list also when checking operation after repair.
2. When using this list during shipping or receiving inspection, judge the quality according to purpose of the inspection, not by directly referring to this level.
3. For individual taste or special usage, some users may not be satisfied with this level of quality and will request a different one.
   In such cases, adjust the level as requested by them as much as possible.
4. Checking items which are characterized as sensory test are not included.
   Adjust these items according to the product itself or user's request.
5. Unless otherwise mentioned, use a standard lens #2550–100 or a master lens #2072–0001–75 for the following check.

Name of parts (Camera Body)

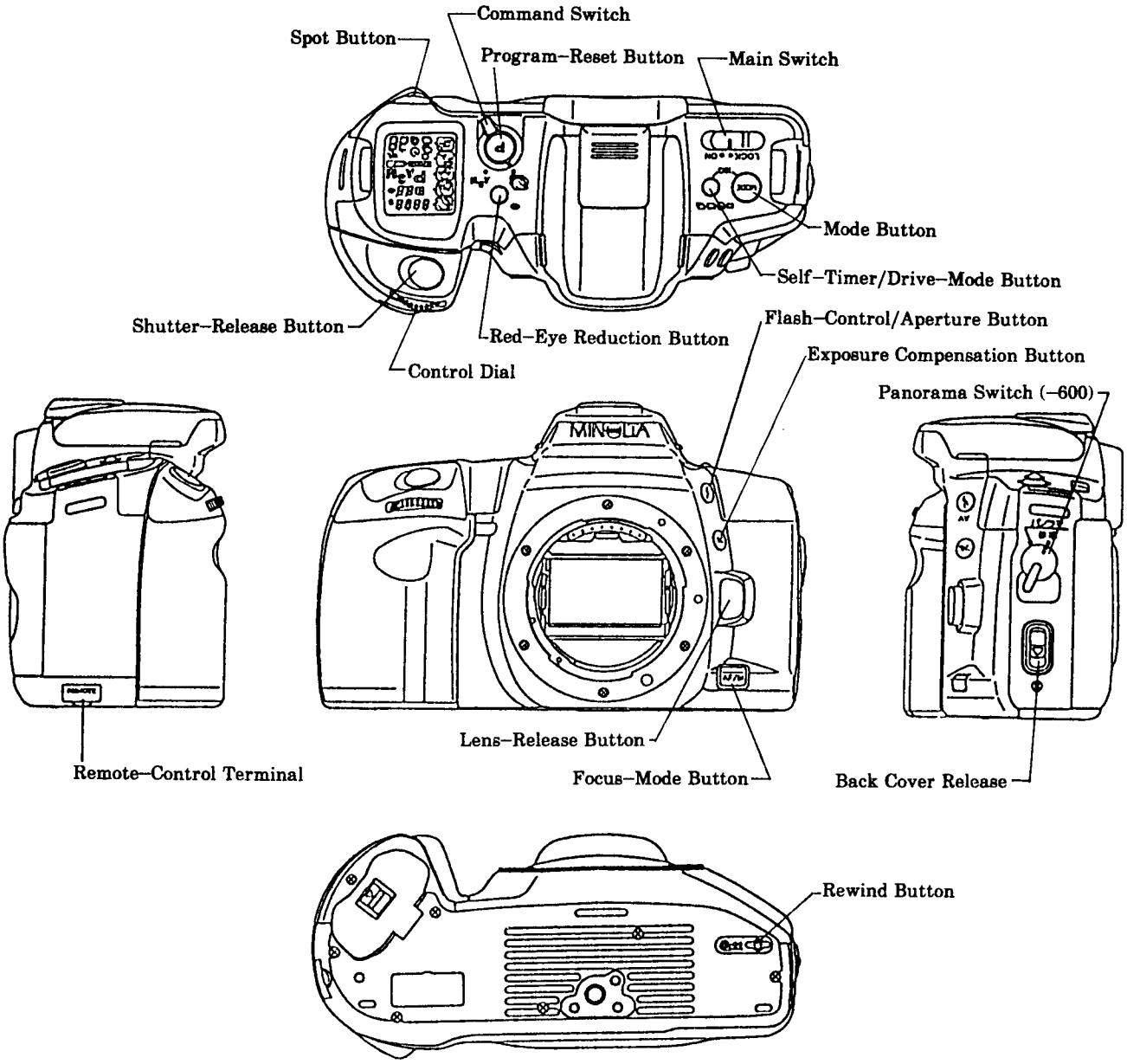

Data Panel and Viewfinder displays

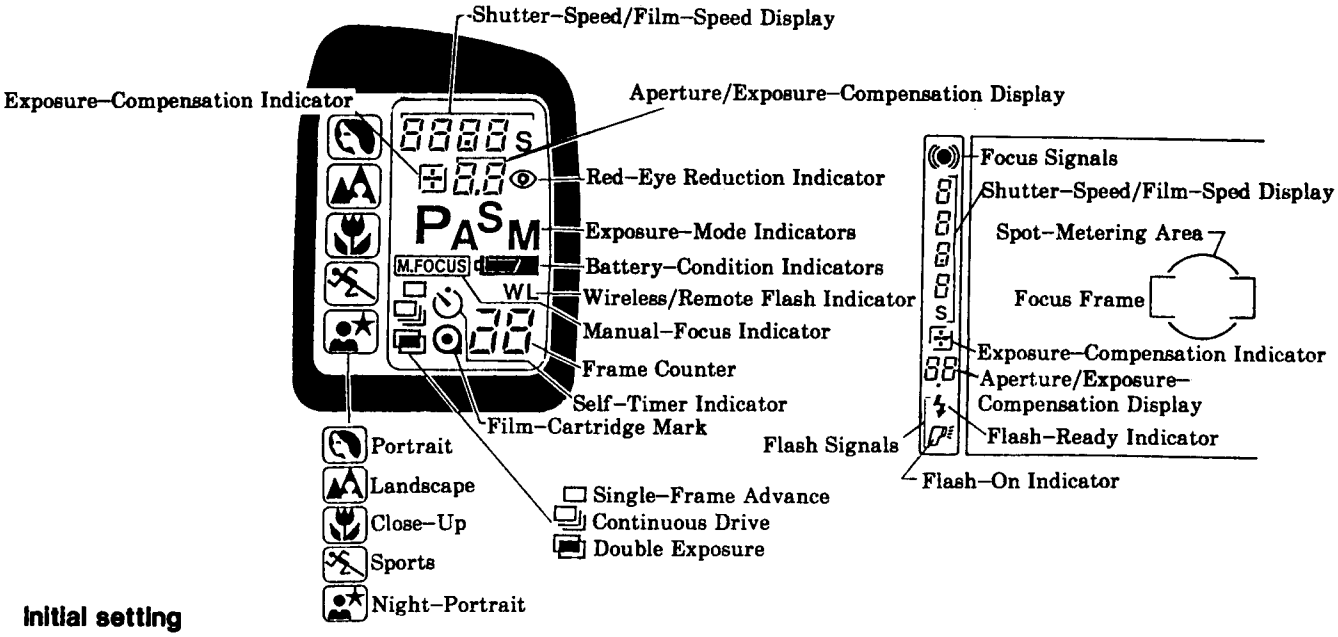

Initial setting

Battery Installation

<Camera>

- By installing a battery, camera is reset as follows.
  - Exposure mode: P
  - Exposure compensation: 0
  - Drive mode: Single frame advance
  - Focus Mode: Autofocus
  - Wireless flash: Cancelled
- Battery-Condition Indicator appears and stays for 4 seconds.
- These settings are not reset.
  - Number of exposed frames
  - Red eye reduction
  - Manually set film speed

<Lens>

- AF lens : Set to a specific focus position after infinity reset.
- xi-lens : Set to a specific focus position after zoom wide-end reset.

Main Switch ON

<Camera>

- By sliding Main Switch to ON, camera is reset as follows.
  - Focus mode: Autofocus
  - Self-timer: Cancelled
  - Wireless flash: Cancelled
- Settings other than above are not reset.
- Battery Condition Indicator appears and stays for 4 seconds.

<Lens>

- AF lens : Set to a specific focus position after infinity reset.
- xi-lens : Set to a specific focus position after zoom wide-end reset.

Main Switch LOCK

<Camera>

- By sliding Main Switch to LOCK, all displays in Data Panel disappear.

<Lens>

- AF lens : Reset to infinity position.
- xi-lens : Reset to its shortest length of lens.

Settings & Displays

Exposure/Subject–Program Mode Indicators

- Pressing and holding Mode Button while turning Control Dial will change displays according to Command Switch position;

  Command Switch at Exposure Mode: $_{A}^{S}{}_{M}$

  P ⟷ A ⟷ S ⟷ M

  Command Switch at Subject Program Mode:

  P ⟷ ⟷ ⟷ ⟷ ⟷

Program reset displays

- Pressing Program Reset Button will reset the settings and displays as follows:
  - Exposure mode: P
  - Exposure compensation: ±0
  - Drive mode: Single–frame advance
  - Focus mode: AF
  - Self–timer: Cancelled
  - Wireless flash: Cancelled

Drive Mode Indicators

- Pressing and holding Self–Timer/Drive–Mode Button while turning Control Dial will change Drive Mode Indicators:

  Single–frame advance ⟷ Continuous drive

  Self–timer ⟷ Double exposure

Red–Eye Reduction Indicator

- By each press of Red–Eye Reduction Button, Red–Eye Reduction Indicator appears/disappears.

Wireless/Remote Flash Indicator

- When a flash unit for wireless flash is attached, by each press of Red–Eye Reduction Button, Wireless Flash Indicator "WL" appears/disappears.

※While the camera and the flash unit are set to the wireless flash mode, detaching the flash unit then pressing the Red–Eye Reduction Button will make a test burst.

※Wireless flash mode is cancelled after Main Switch is OFF.

Manual Focus Indicator

- By each press of Focus Mode Button, Manual Focus Indicator appears and disappears alternately.
  - In manual focus mode: Manual Focus Indicator "M.FOCUS" appears in Data Panel.
  - In autofocus mode: The Manual Focus Indicator disappears and lens is set to a specific focus position after infinity reset or zoom wide–end reset.

Exposure Compensation Indicator

- Pressing Exposure Compensation Button while turning Control Dial changes Exposure Compensation Display within the range as follows:

  ⊟3.0EV to ⊞3.0EV *In 1/2–stop increments

Film Speed Display

- Pressing Mode Button and Self–Timer/Drive–Mode Button simultaneously while turning Control Dial will change Film Speed Display within the range as follows:

  ISO 6 to 6400 *In 1/3–stop increments

Controls and Operations

Exposure mode

(P mode)
- Optimum shutter speed and aperture are automatically set.
- If the required setting is beyond camera's control range, Flash–On Indicator "⚡" and Shutter Speed Display blink in Viewfinder.

(A mode)
- Turning Control Dial selects aperture setting in 1/2–stop increments.
- Optimum shutter speed is automatically set.
- If the required setting is beyond camera's control range, Shutter Speed Displays blink.

(S mode)
- Turning Control Dial selects shutter speed setting in 1/2–stop increments.
- Optimum aperture is automatically set.
- If the required setting is beyond camera's control range, Aperture Displays blink.

(M mode)
- Turning Control Dial selects shutter speed setting.
- Pressing and holding Aperture Button while turning Control Dial selects aperture setting.
- If your setting is over/under exposure, Exposure Compensation Indicator appears accordingly in Viewfinder.

  [+] : Over exposure
  None: Optimum exposure
  [−] : Under exposure

Metering mode

(Spot metering)
- While Spot Button is pressed and held, aperture and shutter speed are locked.
- Only Spot–Metering Area is used for metering.

Flash

Flash control
- When flash is on and charging, Flash–On Indicator "⚡" appears in Viewfinder.
- When flash charge is completed, Flash–Ready Indicator " ⚡ " appears in Viewfinder.
- After a flash burst, Flash–Ready Indicator " ⚡ " blinks in 2Hz in Viewfinder.

Flash recycling time
- Within 2.7 sec. (no pre–flash);
  Reference voltage: 5.8V, 0.6Ω (Using Power Supply Adapter)

■Flash control shutter speed

Exposure mode	Normal flash (sec.)	Wireless flash (sec.)
P	1/90 (1/90 – 2)	1/45 (1/45 – 2)
Portrait		
Landscape		
Close up		
Sports		
Night Portrait	1/90 – 2	1/45 – 2
A	1/90 (1/90 – 2)	1/45 (1/45 – 2)
S		
M	1/90 or slower	1/45 or slower

※Shutter speed in brackets ( ): while Spot Button is pressed down.

Flash mode

(Auto–flash)

■Conditions to make auto flash

Exposure mode	Low light	Back lit
P	○	○
Portrait	○	○
Landscape	○	○
Close up	○	×
Sports	○	×
Night portrait	---	---
A	---	---
S	---	---
M	---	---

※In condition marked " ○ " and when flash is down, Flash–On Indicator " " blinks in Viewfinder.

※When wireless flash is set and built–in flash is down, Flash–On Indicator " " blinks in Viewfinder.

(Fill in flash)

- In A, S, M, or night–portrait mode, or while Flash–Control Button is pressed and held, flash always fires.

Focusing

(Autofocus)

- By pressing Shutter–Release Button partway down, one of the Focus Signals appear in Viewfinder.
  - light: Focus is confirmed. (continuous AF)
  - light: Focus cannot be confirmed.
  - blink: Focus cannot be confirmed. (low–contrast)
  - light: Focus and exposure are locked.
- AF illuminator operates (built–in flash bursts) in low light.

(Manual focus)

- By pressing Shutter–Release Button partway down, one of the Focus Signals appear in Viewfinder.
  - light: Focus is confirmed.
  - None: Focus cannot be confirmed.
  - blink: Focus cannot be confirmed. (low–contrast)
- AF illuminator doesn't operate (built–in flash doesn't burst).

Film Transport

Initial load

- When initial load is completed, " 1 " appears in Data Panel.
- When initial load is failed, " " appears blinking in Data Panel.

Rewind

- Film rewind automatically starts at the end of the roll.
- Pressing Rewind Button starts mid–roll rewind.
- During rewind, number in Frame Counter decreases accordingly.
- When film rewind is completed, " " appears in Frame Counter and " " blinks.
- Film tip is completely rolled into film cartridge.

Rewind time

- Approx. 24sec.; Film: Kodak Gold 100, 24exp., Reference voltage: 5.8V (using Power Supply Adapter).

Drive mode

(Single–frame advance)
- While Shutter–Release Button is pressed and held, shutter runs only for one time.
- In AF mode, shutter runs only after focus is confirmed.

(Continuous–drive)
- While pressing and holding Shutter–Release Button, shutter runs continuously up to 1 frame per second.
- In AF mode, shutter runs continuously each time after focus is confirmed, and on second shot and after, focus mode becomes continuous AF.

(Double exposure)
- Film doesn't advance until the second shot is taken.
- Pressing Program–Reset Button or removing and setting the battery cancels the setting.

(Self–timer)
- During countdown, Self–Timer Indicator and Self–Timer Lamp blink in 2Hz.
- Shutter is released 10 sec. after the self–timer starts operating.
- Focus is locked during countdown.

Customized Functions

AF illuminator on/off
- By sliding Main Switch from LOCK to ON while pressing Red–Eye Reduction Button, on or off appears in Data Panel.
  on AL: AF illuminator is on.
  oFF AL: AF illuminator is off.

Service function–1 (F–– shutter lock on/off)
- By sliding Main Switch from LOCK to ON while pressing and holding Spot and Drive–Mode Buttons, on or off appears in Data Panel.
  on: Shutter is locked when film is loaded and no lens is attached.
  oFF: Shutter can be released when film is loaded and no lens is attached.

Service function–2 (all displays turn on)
- By installing a battery while pressing and holding Mode, Drive–Mode and Program Reset Buttons are pressed and held simultaneously, all displays appear in Data Panel and Viewfinder.

※Resume to normal display by removing and installing the battery.

Standard

AE level

(manual shutter speed) *Using Shutter Tester MODEL S–2201, S–2101

Shutter speed	Standard (ms)	Allowable range (ms)	Difference	Uneven exposure
1/2000	0.488	0.311–0.766	±0.65EV	Difference between max. and min. of three values (Range –A, –B, –C): within±0.6EV Difference between range –A & –B, range –B & –C: ±0.3EV
1/1000	0.977	0.667–1.430	±0.55EV	
1/500	1.95	1.58–2.40	±0.3EV	
1/250	3.91	3.18–4.81		
1/125	7.81	6.34–9.62		
1/90	11.1	9.02–13.7		
1/60	15.6	12.7–19.2		
1/30	31.3	29.2–33.5	±0.1EV	
1/15	62.5	58.3–67.0		
1/8	125	117–134		
1/4	250	233–268		
1/2	500	467–536		

X–sync delay time

Shutter speed	Measured item	Allowable range
1/90	X–contact delay time	0.4 to 0.9ms
	From X–contact on to 2nd curtain appearance	2.4ms or more

AE (automatic)

*Using standard lens (50/1.7), ISO 100 film, and EE tester (K value: 1.3)

Exposure mode	Luminance	Shutter speed	Aperture	Allowable range
P	EV15 EV12 EV10 EV6 EV4	–	–	within 0±1.0EV
A	EV15 EV10 EV10 EV10 EV6	–	F5.6 F1.7 F5.6 F22 F5.6	
S	EV15 EV10 EV10 EV10 EV6	1/1000 1/250 1/30 1/8 1	–	

Flash level

*Using ISO 100 film

Within F5.6±0.5EV

*See page 30 of Repair Guide.

Current leak

*Using 5.8V, 2CR5–type Power Supply Adapter

Condition	Allowable range
During Main Switch lock	50μA or less
During Main Switch on	50μA or less

Current consumption

*Using 5.8V, 2CR5–type Power Supply Adapter

Condition	Allowable range
Film advance	700mA or less
Film rewind	700mA or less

B.C. lock voltage

*Using 2CR5–type Power Supply Adapter for B.C. adjustment

4.75V

*See page 33 of Repair Guide.

Body back

44.675 – 44.730

INDEX

PART NO.	PAGE
2151-0105	1
2078-0114	8
2094-0114	8
2092-0117	8
2092-0119	8
2082-0120	1
2089-0121	1
2151-0131	7
2151-0135	7
2092-0139	2
2151-0140	2
2085-0145	7
2092-0146	3
2092-0150	5
2092-0161	7
2151-0162	7
2092-0167	7
2078-0180	3
2092-0191	8
2092-0201	2
2092-0250	6
2077-0253	5
2092-0260	6
2092-0277	6
2092-0278	6
2151-0320	2
2078-0330	3
2092-0331	3
2078-0332	2

PART NO.	PAGE
2151-0408	4
2092-0413	2
2092-0415	6
2092-0416	3
2092-0426	4
2092-0455	2
2151-0500	5, 6
2092-0545	5
2151-0580	4
2092-1002	2
2092-1003	1
2092-1004	1
2072-1010	5
2151-1011	5
2089-1011	3
2092-1013	3
2092-1014	5
2092-1015	5
2092-1016	5
2092-1017	5
2092-1018	5
2092-1019	5
2151-1020	5
2078-1023	1
2092-1060	1
2092-1061	1
2075-1062	1, 2
2078-1072	3
2078-1073	3

PART NO.	PAGE
2085-1087	3
2092-1106	8
2092-1111	8
2076-1112	8
2092-1163	8
2092-1165	8
2092-1169	8
2082-1205	1
2092-1211	3
2082-1212	3
2092-1213	3
2419-1292	8
2151-1312	1
2151-1313	1
2092-1316	4
2092-1318	1
2092-1323	7
2092-1324	7
2092-1338	1
2092-1340	7
2151-1341	1
2092-1402	1
2092-1411	4
2077-1418	1
2092-1422	1
2151-1429	7
2092-1431	7
2092-1432	7
2092-1433	7
2092-1434	7
2092-1435	7

INDEX

PART NO.	PAGE	PART NO.	PAGE	PART NO.	PAGE
2092-1436	7	2092-1603	7	2151-3014	2
2092-1437	7	2092-1604	7	2078-3030	2
2092-1438	4	2085-1605	7	2092-3051	3
2092-1444	7	2092-1606	7	2151-3055	3
2085-1445	7	2092-1608	7	2092-3056	3
2085-1446	7	2085-1611	7	2092-3057	3
2085-1453	7	2085-1616	7	2092-3303	3
2085-1454	7			2078-3304	1
2092-1480	1	2085-2004	2	2092-3305	2
2092-1481	1	2092-2531	5		
2092-1482	5	2092-2532	5	2092-4004	3
2092-1490	5	2085-2589	6	2092-4008	7
2092-1505	5	2077-2616	6	2092-4010	4
2092-1506	5	2085-2619	6	2092-4011	4
2092-1511	5	2085-2620	2	2092-4012	4
2092-1515	5	2092-2701	3	2092-4014	1
2085-1516	5	2092-2702	3	2151-4201	4
2092-1521	5	2092-2703	6	2092-4202	4
2092-1523	2	2092-2704	3	2151-4206	4
2092-1524	2	2092-2705	6	2092-4207	4
2092-1525	2	2092-2706	6	2094-4261	8
2092-1526	5	2092-2710	6	2076-4401	9
2092-1527	5	2092-2711	1	2085-4405	9
2092-1528	5	2092-2712	1	2092-4403	9
2092-1529	1	2092-2713	2	2092-4411	7
2092-1530	1	2092-2714	2	2085-4412	7
2092-1538	5	2092-2715	2	2092-4502	2
2092-1540	5	2092-2717	1	2092-4503	2
2151-1601	7	2092-2719	3	2092-4513	2
2092-1602	7	2092-2721	6	2082-4517	2

INDEX

PART NO.	PAGE
2092-5011	4
2085-5012	4
2092-5013	4
2092-5019	4
2092-5025	4
2092-5026	4
2092-5027	4
2092-5035	4
2092-5036	4
2092-5037	4
2089-5051	6
2072-5052	6
2092-5111	6
2078-5125	6
2092-5133	5
2078-5145	4, 8
2092-5151	6
2151-5805	4
2076-5806	6
2092-5815	4
2092-5816	4
2092-5817	4
9384-2190-50	2, 3, 4, 5, 6, 7
9384-2191-00	2
9384-2290-90	3, 6, 7
9384-2391-30	2, 3, 4, 6
9384-2590-50	1, 4

PART NO.	PAGE
9391-0807-00	9
9391-0807-01	9
9391-0807-02	9
9391-0807-03	9
9391-0807-04	9
9391-0807-05	9
9391-0807-06	9
9391-0807-07	9
9391-0807-08	9
9391-1210-01	9
9391-1210-03	9
9391-1210-06	9
9391-1210-09	9
9721-0150-50	1
9747-1425-07	7
9747-1730-07	6, 8
9747-1735-07	2, 3, 4, 5
9747-1740-07	2
9747-1740-15	1
9747-1745-07	2, 3
9747-1745-15	1
9747-1750-07	2, 3, 4, 5
9747-1750-15	1
9747-1755-15	1
9747-1760-07	2
9747-1760-15	1, 2
9747-1765-15	1
9747-1770-07	2

PART NO.	PAGE
9748-1730-07	1, 7
9749-1725-07	2
9749-1730-07	8
9761-1730-07	7
9761-1745-07	2
9761-1745-15	1, 3
9761-2045-07	2
9761-2050-07	1
9761-2060-01	1
9761-2060-04	5
9761-2060-07	2
9761-2060-15	3
9761-2065-07	2
9761-2065-15	3
9761-2080-07	5
9762-1740-07	1
9762-1745-07	6
9762-1790-07	1
9762-2060-01	7
9795-1837-40	6

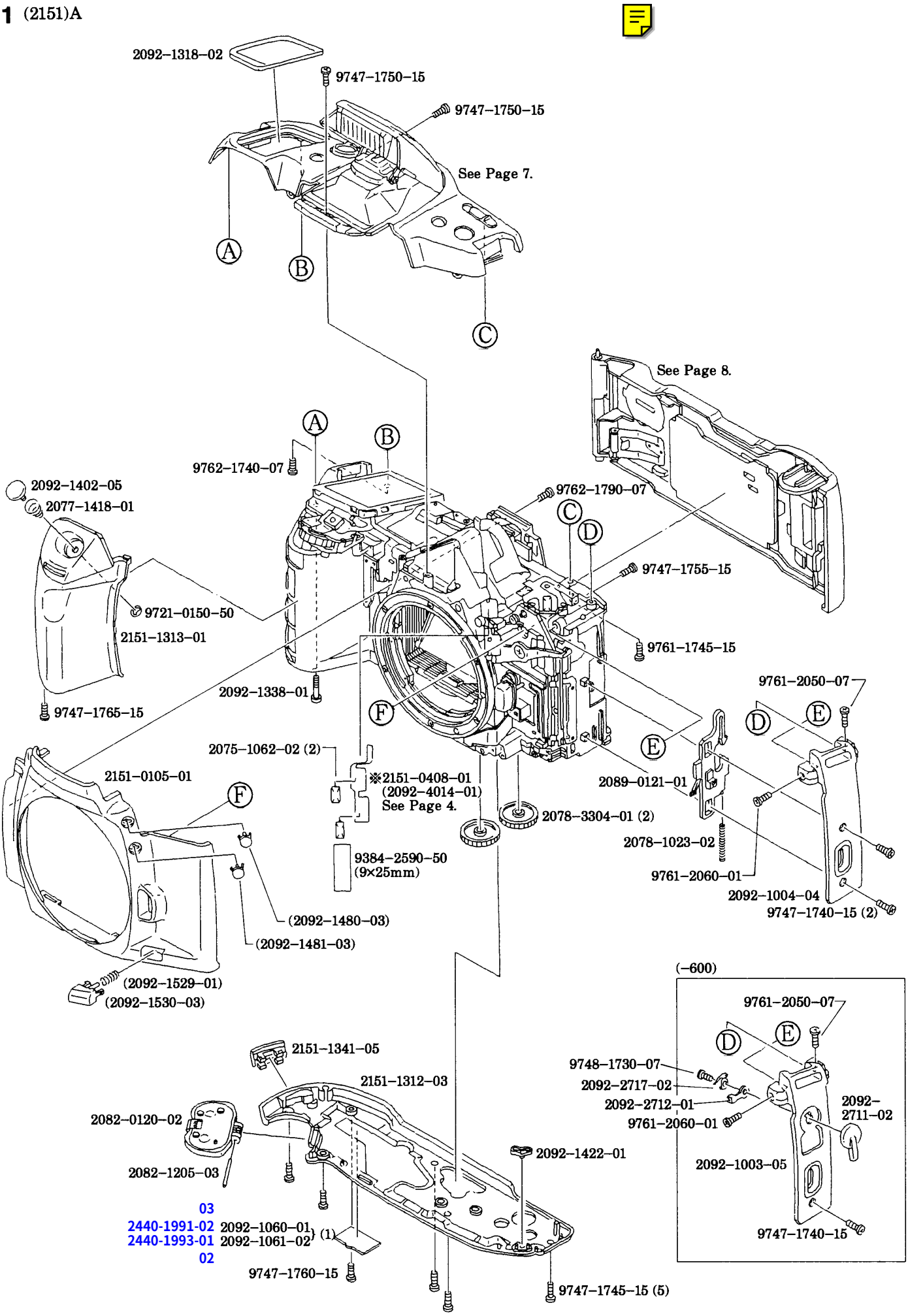
2092-1318-02
9747-1750-15
9747-1750-15
See Page 7.
A
B
C
See Page 8.
A
B
9762-1740-07
2092-1402-05
2077-1418-01
9762-1790-07
C
D
9747-1755-15
9721-0150-50
2151-1313-01
9761-1745-15
9761-2050-07
2092-1338-01
9747-1765-15
F
D
E
E
2075-1062-02 (2)
2151-0105-01
※2151-0408-01
(2092-4014-01)
See Page 4.
2089-0121-01
F
2078-3304-01 (2)
2078-1023-02
9384-2590-50
(9×25mm)
9761-2060-01
2092-1004-04
9747-1740-15 (2)
(2092-1480-03)
(2092-1481-03)
(2092-1529-01)
(2092-1530-03)
(-600)
9761-2050-07
D
E
2151-1341-05
9748-1730-07
2092-2717-02
2151-1312-03
2092-2712-01
2092-2711-02
2082-0120-02
9761-2060-01
2092-1422-01
2092-1003-05
2082-1205-03
03
2440-1991-02 2092-1060-01
2440-1993-01 2092-1061-02 (1)
02
9747-1740-15
9747-1760-15
9747-1745-15 (5)

PART NO.	PART NAME		QTY.
2151-0105-01	FRONT COVER ASSY	前カバーセット	1
(2092-1480-03)	FLASH-CONTROL BUTTON	フラッシュ釦	1
(2092-1481-03)	EXPOSURE-COMPENSATION BUTTON	＋／－釦	1
(2092-1529-01)	FOCUS-MODE BUTTON SP	フォーカスモード釦SP	1
(2092-1530-03)	FOCUS-MODE BUTTON	フォーカスモード釦	1
2082-0120-02	BATTERY COVER SET	電池室蓋セット	1
2089-0121-01	BACK-COVER RELEASE UNIT	裏蓋ロックレバーセット	1
2092-1003-05	BACK-COVER RELEASE COVER (-600)	裏蓋ロックカバー	1
2092-1004-04	BACK-COVER RELEASE COVER (-100, -200)	裏蓋ロックカバー	
2078-1023-02	LOCK SP	裏蓋ロックSP	1
~~2092-1060-01~~	SERIAL NUMBER PLATE	ボディNO．銘坂	1
~~2092-1061-02~~	SERIAL NUMBER PLATE (MADE IN MALAYSIA)	ボディNO．銘板	
2075-1062-02	OVER RIDE CONTACT	オーバーライド接片	2
2082-1205-03	BATTERY COVER HINGE AXIS	電池蓋ヒンジ軸	1
2151-1312-03	BOTTOM COVER	下カバー	1
2151-1313-01	GRIP COVER	グリップカバー	1
2092-1318-02	LCD WINDOW	LCD窓	1
2092-1338-01	SCREW	ねじ	1
2151-1341-05	REMOTE-RELEASE CAP	リモートレリーズ蓋	1
2092-1402-05	SHUTTER-RELEASE BUTTON	レリーズ釦	1
2077-1418-01	RELEASE BUTTON SPRING	レリーズ釦SP	1
2092-1422-01	REWIND BUTTON	途中巻戻し釦	1
*2440-1991-02	SERIAL NUMBER PLATE	ボディNO．銘坂	1
2440-1991-03	SERIAL NUMBER PLATE	ボディNO．銘坂	
*2440-1993-01	SERIAL NUMBER PLATE	ボディNO．銘坂	
2440-1993-02	SERIAL NUMBER PLATE	ボディNO．銘坂	
2092-2711-02	PANORAMA SWITCH (-600)	パノラマ切換えレバー	1
2092-2712-01	PANORAMA OPERATION LEVER-A (-600)	パノラマ可動レバーA	1
2092-2717-02	SPANO. CONTACT (-600)	SPANO．接片	1
2078-3304-01	REWIND GEAR-B	巻戻しギヤB	2
9384-2590-50	MENDING TAPE (1R/50M)	メンデイングテープ	1
9721-0150-50	E-RING	Eリング	1
9747-1740-15	SCREW (-100, -200)	ねじ	2
9747-1740-15	SCREW (-600)	ねじ	1
9747-1745-15	SCREW	ねじ	5
9747-1750-15	SCREW	ねじ	2
9747-1755-15	SCREW	ねじ	1
9747-1760-15	SCREW	ねじ	1
9747-1765-15	SCREW	ねじ	1
9748-1730-07	SCREW (-600)	ねじ	1
9761-1745-15	SCREW	ねじ	1
9761-2050-07	SCREW	ねじ	1
9761-2060-01	SCREW	ねじ	1
9762-1740-07	SCREW	ねじ	1
9762-1790-07	SCREW	ねじ	1
			1
2151-0408-01	See Page 4.	P．4参照	
(2092-4014-01)	FPC-N	Nフレキ	1

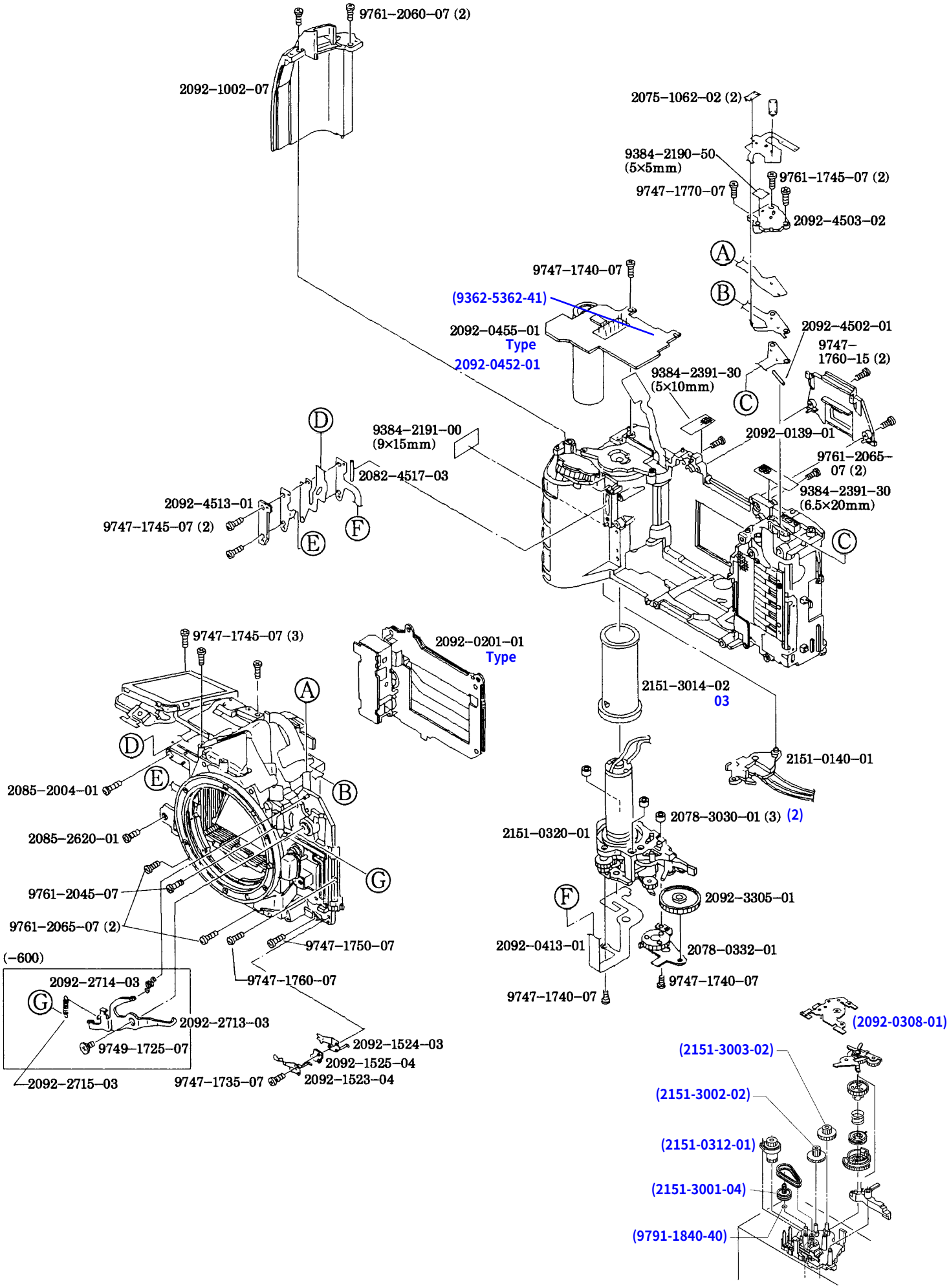
9761-2060-07 (2)
2092-1002-07
2075-1062-02 (2)
9384-2190-50
(5×5mm)
9761-1745-07 (2)
9747-1770-07
2092-4503-02
A
9747-1740-07
B
(9362-5362-41)
2092-0455-01
Type
2092-0452-01
2092-4502-01
9747-
1760-15 (2)
9384-2391-30
(5×10mm)
C
D
9384-2191-00
(9×15mm)
2092-0139-01
9761-2065-
07 (2)
2082-4517-03
9384-2391-30
(6.5×20mm)
2092-4513-01
9747-1745-07 (2)
E
F
C
9747-1745-07 (3)
2092-0201-01
Type
A
2151-3014-02
03
D
2151-0140-01
E
B
2085-2004-01
2078-3030-01 (3) (2)
2085-2620-01
2151-0320-01
G
9761-2045-07
F
2092-3305-01
9761-2065-07 (2)
9747-1750-07
2092-0413-01
2078-0332-01
(-600)
9747-1760-07
2092-2714-03
9747-1740-07
9747-1740-07
G
2092-2713-03
(2092-0308-01)
9749-1725-07
2092-1524-03
(2151-3003-02)
2092-1525-04
2092-2715-03
9747-1735-07
2092-1523-04
(2151-3002-02)
(2151-0312-01)
(2151-3001-04)
(9791-1840-40)

PART NO.	PART NAME		QTY.
2092-0139-01	EYEPIECE FRAME UNIT	接眼枠セット	1
2151-0140-01	REMOTE-RELEASE ASSY	リモートホルダーセット	1
2092-0201-01	SHUTTER UNIT	シャッターユニット	1
2151-0320-01	WINDING BASE PLATE ASSY	巻き上げ台坂セット	1
(2092-0308-01)	PLANETARY GEAR ASSY	遊星ギヤセット	1
(2151-0312-01)	SPOOL DRIVE GEAR ASSY	スプール駆動ギヤセット	1
(2151-3001-04)	REDUCTION GEAR-A	減速ギヤA	1
(2151-3002-02)	REDUCTION GEAR-B	減速ギヤB	1
(2151-3003-02)	REDUCTION GEAR-C	減速ギヤC	1
(9791-1840-40)	WASHER	ワッシャ	1
2078-0332-01	REWIND BASE PLATE SET	巻戻し台板セット	1
2092-0413-01	FPC-M SET	Mフレキセット	1
2092-0452-01	FLASH CONVERTER PCB SET	フラッシュコンバーター基板セット	1
~~2092-0455-01~~	FLASH CONVERTER PCB SET	フラッシュコンバーター基板セット	1
(9362-5362-41)	Q161	Ｑ１６１	1
2092-1002-07	STRAP EYELET (R)	巻上げ側吊り環	1
2075-1062-02	OVER RIDE CONTACT	オーバーライド接片	2
2092-1523-04	SRAF. CONTACT-A	SRAF接片A	1
2092-1524-03	SRAF. CONTACT-B	SRAF接片B	1
2092-1525-04	SRAF. CONTACT SPACER	SRAF接片スペーサー	1
2085-2004-01	SCREW	ねじ	1
2085-2620-01	SCREW	ねじ	1
2092-2713-03	PANORAMA COUPLING LEVER-A (-600)	パノラマ連動レバーA	1
2092-2714-03	PANORAMA OPERATION SP-A (-600)	パノラマ駆動SP－A	1
2092-2715-03	PANORAMA COUPLING SP (-600)	パノラマ連結SP	1
*2151-3014-02	SPOOL	スプール	1
2151-3014-03	SPOOL	スプール	1
*2078-3030-01	SILENT COLLAR	消音ゴム	~~3~~ 2
2092-3305-01	REWIND GEAR-C	巻戻しギアC	1
2092-4502-01	RUBBER CONNECTOR	コネクターゴム	1
2092-4503-02	CONNECTOR BASE PLATE	コネクター台板	1
2092-4513-01	CONNECTOR PRESSURE	コネクター押さえ板	1
2082-4517-03	A-F-M RUBBER CONNECTOR	A－F－Mコネクターゴム	1
9384-2190-50	DOUBLE-FACED TAPE (PER ROLL)	両面テープ	1
9384-2191-00	DOUBLE-FACED TAPE (PER ROLL)	両面テープ	1
9384-2391-30	ACETATE TAPE (PER ROLL)	アセテートクロステープ	2
9747-1735-07	SCREW	ねじ	1
9747-1740-07	SCREW	ねじ	3
9747-1745-07	SCREW	ねじ	5
9747-1750-07	SCREW	ねじ	1
9747-1760-07	SCREW	ねじ	1
9747-1760-15	SCREW	ねじ	2
9747-1770-07	SCREW	ねじ	1
9749-1725-07	SCREW (-600)	ねじ	1
9761-1745-07	SCREW	ねじ	2
9761-2045-07	SCREW	ねじ	1
9761-2060-07	SCREW	ねじ	2
9761-2065-07	SCREW	ねじ	4

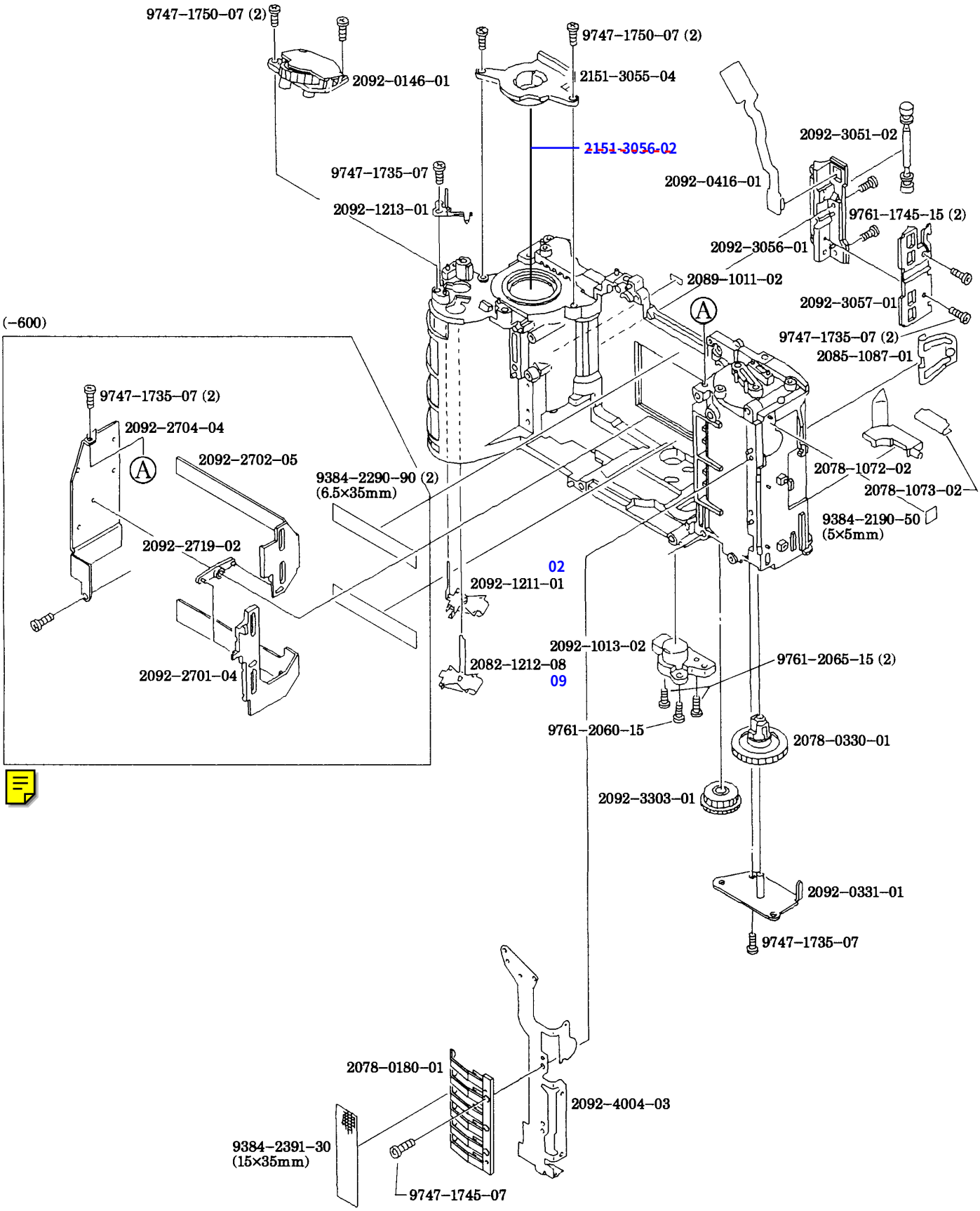
9747-1750-07 (2)
2092-0146-01
9747-1750-07 (2)
2151-3055-04
2151-3056-02
2092-3051-02
9747-1735-07
2092-0416-01
2092-1213-01
9761-1745-15 (2)
2092-3056-01
2089-1011-02
2092-3057-01
(-600)
9747-1735-07 (2)
2085-1087-01
9747-1735-07 (2)
2092-2704-04
2092-2702-05
9384-2290-90 (2)
(6.5×35mm)
2078-1072-02
2078-1073-02
9384-2190-50
(5×5mm)
2092-2719-02
02
2092-1211-01
2092-1013-02
9761-2065-15 (2)
2082-1212-08
09
2092-2701-04
9761-2060-15
2078-0330-01
2092-3303-01
2092-0331-01
9747-1735-07
2078-0180-01
2092-4004-03
9384-2391-30
(15×35mm)
9747-1745-07

PART NO.	PART NAME		QTY.
2092-0146-01	DIAL UNIT	ダイヤルセット	1
2078-0180-01	DX CONTACTS SET	CAS接片セット	1
2078-0330-01	REWIND FORK SET	巻戻しフォークセット	1
2092-0331-01	REWIND FORK BASE PLATE UNIT	巻戻しフォーク台板セット	1
2092-0416-01	FPC-P SET	Pフレキセット	1
2089-1011-02	LOADING INDEX	ローデイング指標	1
2092-1013-02	TRIPOD BASE PLATE	三脚台板	1
2078-1072-02	FILM CARTRIDGE RECEIVER	パト口金受け	1
2078-1073-02	CARTRIDGE RECEIVER SP	口金受回転SP	1
2085-1087-01	SIDE SP	サイドSP	1
*2092-1211-01	BATTERY CONTACT-A (-)	電池接片A（－）	1
2092-1211-02	BATTERY CONTACT-A (-)	電池接片A（－）	1
*2082-1212-08	BATTERY CONTACT-B (+)	電池接片B（＋）	1
2082-1212-09	BATTERY CONTACT-B (+)	電池接片B（＋）	1
2092-1213-01	BATTERY DETECT SW	電池検知SW	1
2092-2701-04	PANORAMA FRAME PLATE-A (-600)	パノラマ遮光板A	1
2092-2702-05	PANORAMA FRAME PLATE-B (-600)	パノラマ遮光板B	1
2092-2704-04	PANORAMA FRAME HOLDER-A (-600)	パノラマ遮光板押えA	1
2092-2719-02	PANORAMA COUPLING LEVER-B (-600)	パノラマ遮光連動レバーB	1
2092-3051-02	FILM ROLLER	フィルムローラー	1
2151-3055-04	WINDING MOTOR BASE PLATE	巻き上げモーター台板	1
2092-3056-01	FILM GUIDE	フィルムガイド	1
*2151-3056-02	SPACER	スペーサー	1
2092-3057-01	FPC-P HOLDER	Pフレキ押え板	1
2092-3303-01	REWIND GEAR-A	巻戻しギヤA	1
2092-4004-03	FPC-D	Dフレキ	1
9384-2190-50	DOUBLE-FACED TAPE (PER ROLL)	両面テープ	1
9384-2290-90	POLYESTER TAPE (PER ROLL/60M) (-600)	ポリエステルテープ	2
9384-2391-30	ACETATE TAPE (PER ROLL)	アセテートクロステープ	1
9747-1735-07	SCREW (-100, -200)	ねじ	4
9747-1735-07	SCREW (-600)	ねじ	6
9747-1745-07	SCREW	ねじ	1
9747-1750-07	SCREW	ねじ	4
9761-1745-15	SCREW	ねじ	2
9761-2060-15	SCREW	ねじ	1
9761-2065-15	SCREW	ねじ	2

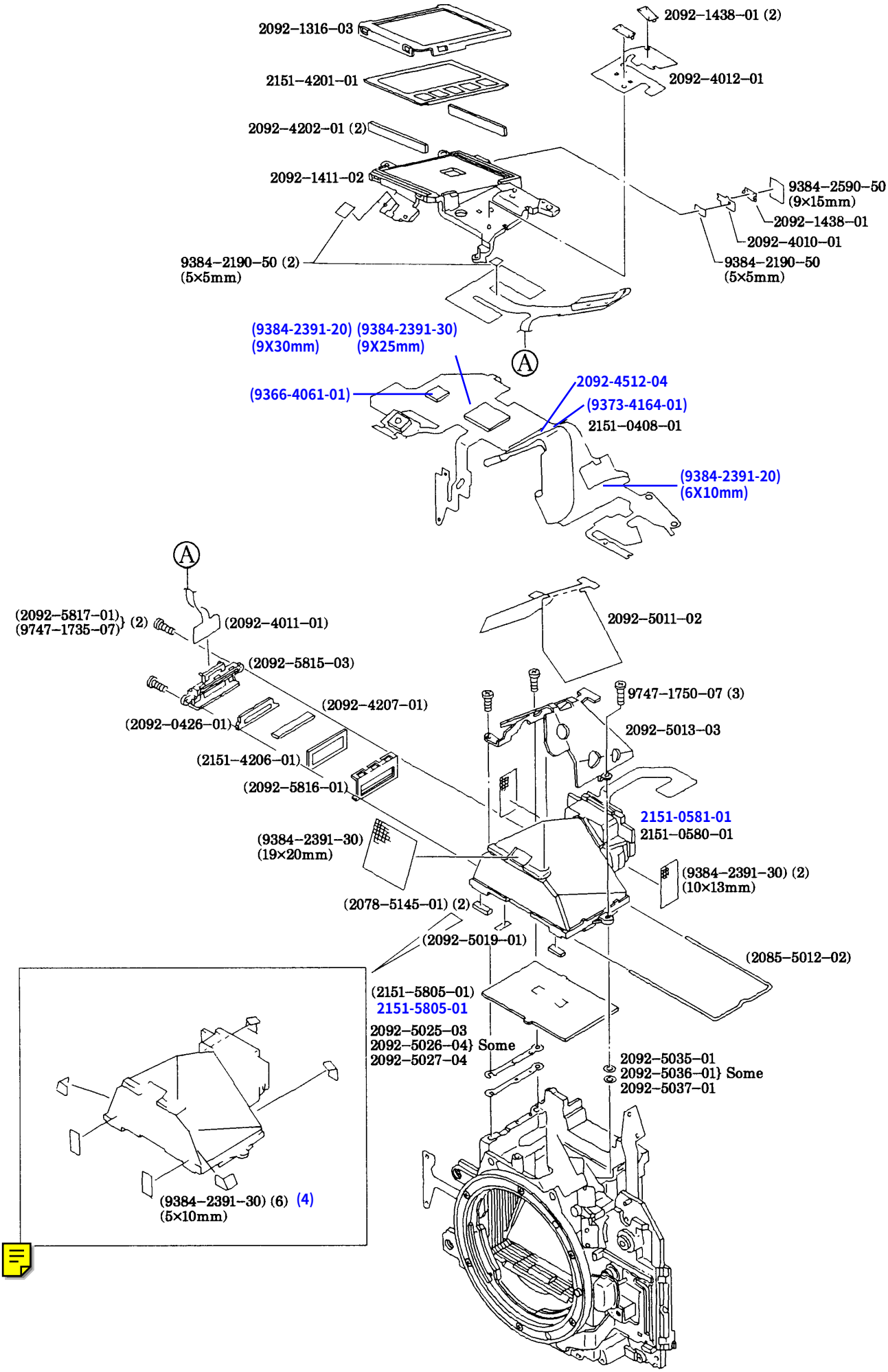
2092–1316–03
2151–4201–01
2092–4202–01 (2)
2092–1411–02
9384–2190–50 (2)
(5×5mm)
2092–1438–01 (2)
2092–4012–01
9384–2590–50
(9×15mm)
2092–1438–01
2092–4010–01
9384–2190–50
(5×5mm)
(9384-2391-20)
(9X30mm)
(9384-2391-30)
(9X25mm)
A
(9366-4061-01)
2092-4512-04
(9373-4164-01)
2151–0408–01
(9384-2391-20)
(6X10mm)
A
(2092–5817–01)
(9747–1735–07) (2)
(2092–4011–01)
(2092–5815–03)
(2092–4207–01)
(2092–0426–01)
(2151–4206–01)
(2092–5816–01)
(9384–2391–30)
(19×20mm)
(2078–5145–01) (2)
(2092–5019–01)
2092–5011–02
9747–1750–07 (3)
2092–5013–03
2151-0581-01
2151–0580–01
(9384–2391–30) (2)
(10×13mm)
(2085–5012–02)
(2151–5805–01)
2151-5805-01
2092–5025–03
2092–5026–04} Some
2092–5027–04
2092–5035–01
2092–5036–01} Some
2092–5037–01
(9384–2391–30) (6) (4)
(5×10mm)

PART NO.	PART NAME		QTY.
2151-0408-01	FPC-A ASSY	Aフレキセット	1
(2092-4512-04)	FPC-A BASE PLATE	Aフレキ台板	1
(9366-4061-01)	IC-5	IC−5	1
(9373-4164-01)	XL-1	XL－1	1
(9384-2391-20)	ACETATE TAPE (PER ROLL)	アセテートクロステープ	2
~~(9384-2391-30)~~	ACETATE TAPE (PER ROLL)	アセテートクロステープ	1
*2151-0580-01	PENTA-PRISM ASSY	ペンタブロックセット	1
2151-0581-01	PENTA-PRISM ASSY	ペンタブロックセット	1
(2092-0426-01)	BACK LIGHT UNIT	バックライトユニット	1
(2092-4011-01)	FPC-K	Kフレキ	1
(2151-4206-01)	LCD 2	LCD 2	1
(2092-4207-01)	LCD 2 CONNECTOR	LCD 2コネクター	1
(2085-5012-02)	FRESNEL LENS SP	焦点板押えSP	1
(2092-5019-01)	PENTA-PRISM LIGHT SHIELD SHEET	ペンタ遮光シート	1
(2078-5145-01)	MIRROR CUSION	主ミラークッション	2
*(2151-5805-01)	FOCUSING SCREEN	焦点板	1
(2092-5815-03)	VIEWFINDER LCD HOLDER	インファインダーLCDホルダー	1
(2092-5816-01)	LCD 2 PRESSURE	LCD 2押え	1
(2092-5817-01)	SCREW	ねじ	2
(9747-1735-07)	SCREW	ねじ	
*(9384-2391-30)	ACETATE TAPE (PER ROLL)	アセテートクロステープ	~~9~~ 7
2092-1316-03	LCD 1 PRESSURE	LCD 1押え	1
2092-1411-02	SHUTTER-RELEASE BASE	レリーズ台坂	1
2092-1438-01	CLICK CONTACT	クリック接片	3
2092-4010-01	FPC-J	Jフレキ	1
2092-4012-01	FPC-L	Lフレキ	1
2151-4201-01	LCD 1	LCD 1	1
2092-4202-01	LCD 1 CONNECTOR	LCD 1コネククー	2
2092-5011-02	PENTA INSULATION SHEET	ペンタ絶縁シート	1
2092-5013-03	PENTA PRESSURE	ペンタ押え	1
2092-5025-03	VB ADJUSTMENT PLATE-A (T=0.2)	VB調整板A	Some
2092-5026-04	VB ADJUSTMENT PLATE-B (T=0.15)	VB調整板B	
2092-5027-04	VB ADJUSTMENT PLATE-C (T=01)	VB調整板C	
2092-5035-01	VB ADJUSTMENT PLATE-D (T=0.2)	VB調整板D	Some
2092-5036-01	VB ADJUSTMENT PLATE-E (T=0.15)	VB調整板E	
2092-5037-01	VB ADJUSTMENT PLATE-F (T=0.1)	VB調整板F	
2151-5805-01	FOCUSING SCREEN	焦点板	1
9384-2190-50	DOUBLE-FACED TAPE (PAR ROLL)	両面テープ	3
9384-2590-50	MENDING TAPE (1R/50M)	メンデイングテープ	1
9747-1750-07	SCREW	ねじ	3

5 (2151)A

2151–0500–01

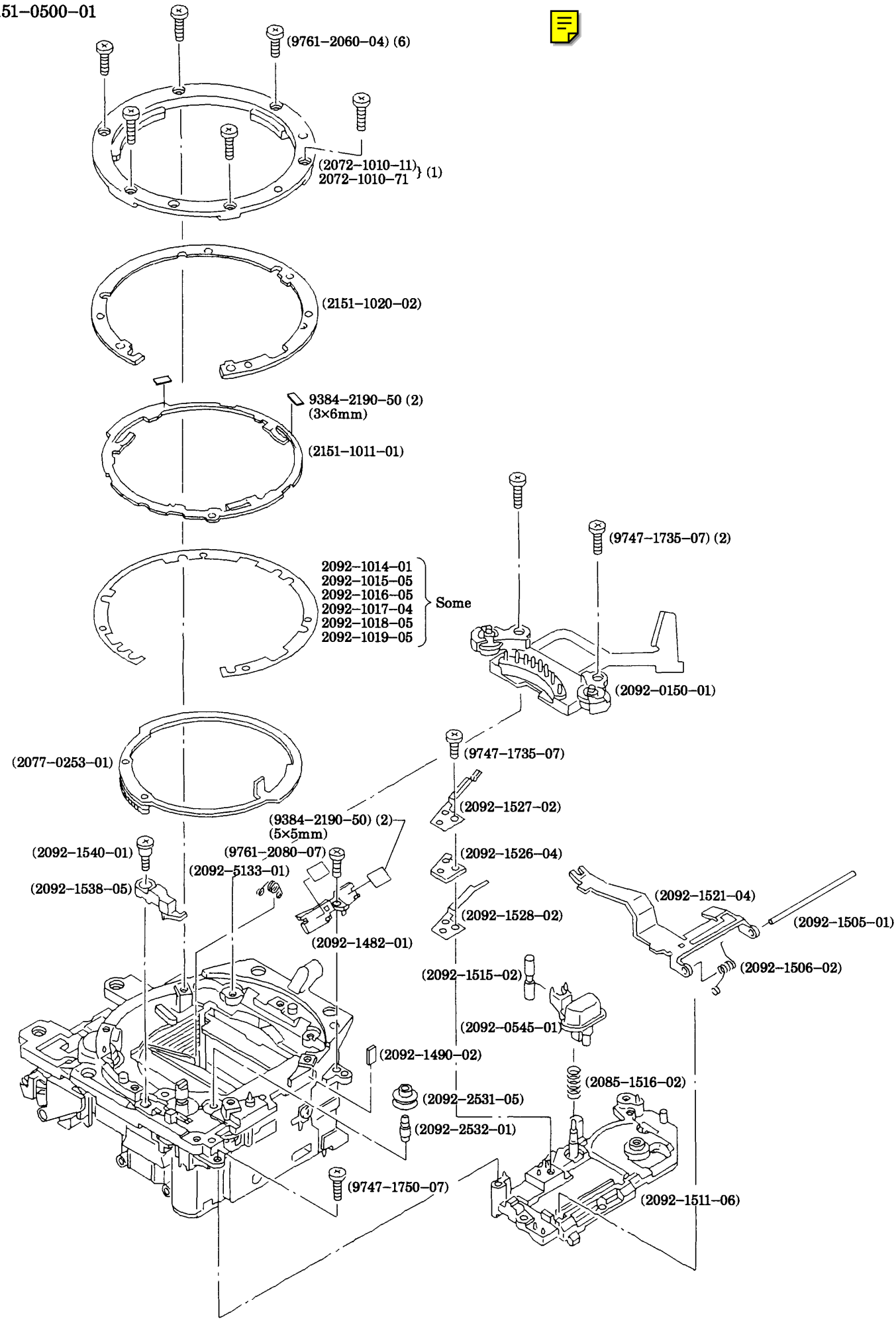

PART NO.	PART NAME		QTY.
2151-0500-01	MIRROR BOX ASSY	ミラーボックスセット	1
(2092-0150-01)	BL CONTACT HOLDER SET	BL接点ホルダーセット	1
(2077-0253-01)	APERTURE RING SET	絞りリングセット	1
(2092-0545-01)	LENS-RELEASE UNIT	レンズロック釦セット	1
(2072-1010-11)	BAYONET LENS MOUNT	マウント	1
(2151-1011-01)	BAYONET SP	リングSP	1
(2151-1020-02)	BAYONET SPACER	マウントスペーサー	1
(2092-1482-01)	EXPOSURE-COMPENSATION BUTTON BASE	＋／－釦台	1
(2092-1490-02)	SPACER	スペーサー	1
(2092-1505-01)	COUPLER LEVER AXIS	カプラーレバー軸	1
(2092-1506-02)	COUPLER LEVER SP	カプラーレバーSP	1
(2092-1511-06)	AF/M CONTACT BASE PLATE	AF／M接片台板	1
(2092-1515-02)	LENS-RELEASE	レンズロックピン	1
(2085-1516-02)	LOCK SET SP	ロックセットSP	1
(2092-1521-04)	COUPLER LEVER	カプラーレバー	1
(2092-1526-04)	SLLK. CONTACT SPACER	SLLK接片スペーサー	1
(2092-1527-02)	SLLK. CONTACT-A	SLLK接片A	1
(2092-1528-02)	SLLK. CONTACT-B	SLLK接片B	1
(2092-1538-05)	COUPLER STOP LEVER	カプラー係止レバー	1
(2092-1540-01)	SCREW	ねじ	1
(2092-2531-05)	RING ROLLER	リングローラー	1
(2092-2532-01)	RING ROLLER AXIS	リングローラー軸	1
(2092-5133-01)	SUB MIRROR SP	サブミラーSP	1
(9384-2190-50)	DOUBLE-FACED TAPE (PER ROLL)	両面テープ	4
(9747-1735-07)	SCREW	ねじ	3
(9747-1750-07)	SCREW	ねじ	1
(9761-2060-04)	SCREW	ねじ	6
(9761-2080-07)	SCREW	ねじ	1
2072-1010-71	BAYONET LENS MOUNT	マウント	1
2092-1014-01	BB ADJUSTMENT WASHER-A (T=0.05)	BB調整ワッシャA	Some
2092-1015-05	BB ADJUSTMENT WASHER-B (T=0.08)	BB調整ワッシャB	
2092-1016-05	BB ADJUSTMENT WASHER-C (T=01)	BB調整ワッシャC	
2092-1017-04	BB ADJUSTMENT WASHER-D (T=0.12)	BB調整ワッシャD	
2092-1018-05	BB ADJUSTMENT WASHER-E (T=0.15)	BB調整ワッシャE	
2092-1019-05	BB ADJUSTMENT WASHER-F (T=0.2)	BB調整ワッシャF	

2151–0500–01

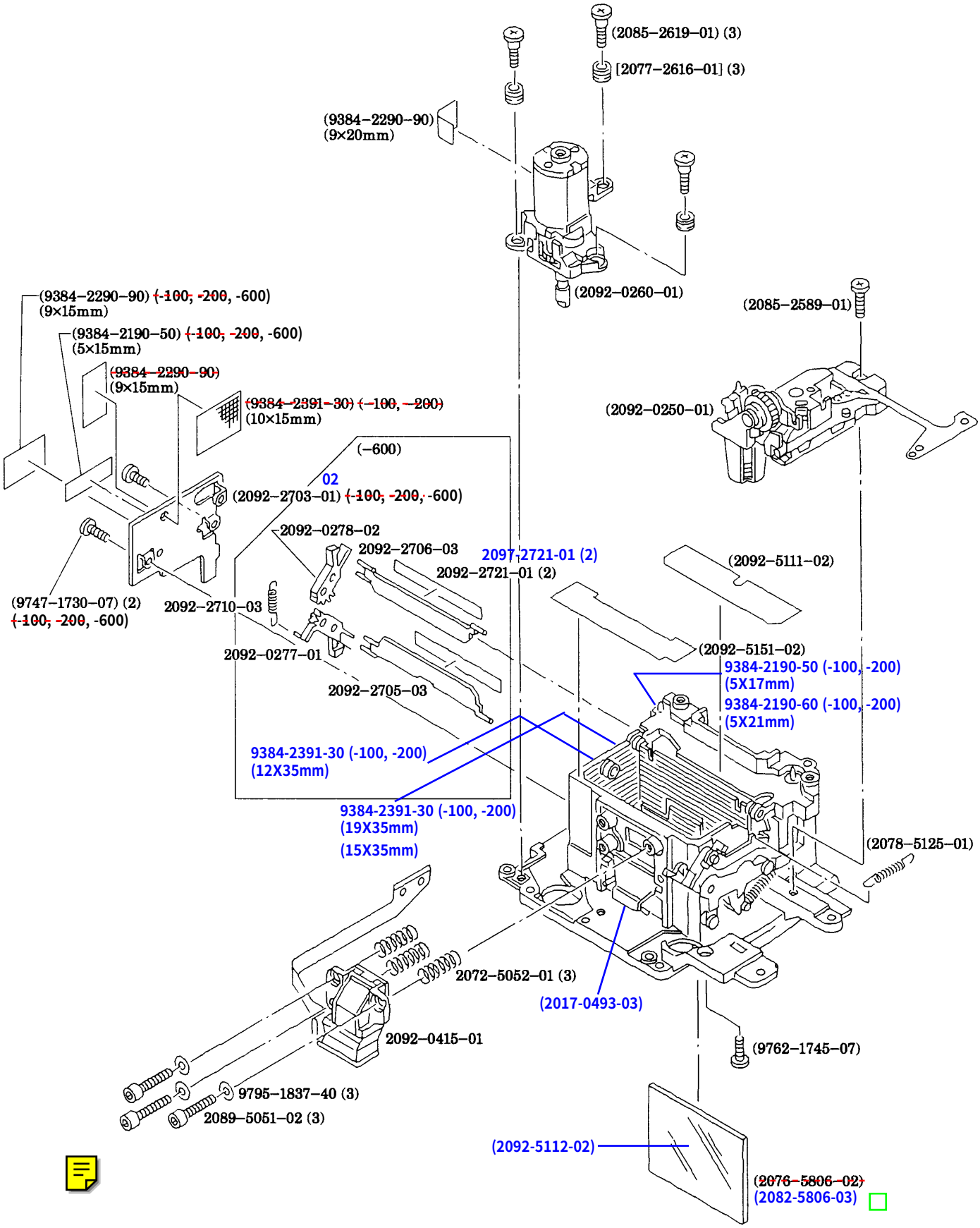
(2085–2619–01) (3)
[2077–2616–01] (3)
(9384–2290–90)
(9×20mm)
(2092–0260–01)
(2085–2589–01)
(9384–2290–90) ~~(-100, -200~~, -600)
(9×15mm)
(9384–2190–50) ~~(-100, -200~~, -600)
(5×15mm)
~~(9384–2290–90)~~
(9×15mm)
~~(9384–2391–30) (-100, -200)~~
(10×15mm)
(2092–0250–01)
(–600)
02
(2092–2703–01) ~~(-100, -200~~, -600)
2092–0278–02
2092–2706–03
2097-2721-01 (2)
2092–2721–01 (2)
(2092–5111–02)
(9747–1730–07) (2)
~~(-100, -200~~, -600)
2092–2710–03
2092–0277–01
(2092–5151–02)
9384-2190-50 (-100, -200)
(5X17mm)
9384-2190-60 (-100, -200)
(5X21mm)
2092–2705–03
9384-2391-30 (-100, -200)
(12X35mm)
9384-2391-30 (-100, -200)
(19X35mm)
(15X35mm)
(2078–5125–01)
2072–5052–01 (3)
(2017-0493-03)
2092–0415–01
(9762–1745–07)
9795–1837–40 (3)
2089–5051–02 (3)
(2092-5112-02)
~~(2076–5806–02)~~
(2082-5806-03)

PART NO.	PART NAME		QTY.
2151-0500-01			
(2092-0250-01)	APERTURE BASE PLATE UNIT	絞り台板セット	1
(2092-0260-01)	AF MOTOR BASE UNIT	AFモーター台板セット	1
[2077-2616-01]	COLLAR	AFサイレントカラー	3
(2085-2589-01)	SCREW	ねじ	1
(2085-2619-01)	SCREW	ねじ	3
*(2092-2703-01)	PANORAMA FRAME HOLDER-B (-100, -200, -600)	パノラマ遮光板押え－B	1
(2092-2703-02)	PANORAMA FRAME HOLDER-B	パノラマ遮光板押え－B	1
(2092-5111-02)	LIGHT SHIELD SHEET-A	遮光シートA	1
(2092-5112-02)	MASK SHEET	マスク板	1
(2078-5125-01)	MIRROR DOWN SP	主ミラーダウンSP	1
(2092-5151-02)	LIGHT SHIELD SHEET-B	遮光シートB	1
(2076-5806-02)	MAIN MIRROR	主ミラー	1
(2082-5806-03)	MAIN MIRROR	主ミラー	1
*(9384-2190-50)	DOUBLE-FACED TAPE (PER ROLL) (-100, -200, -600)	両面テープ	1
*(9384-2290-90)	POLYESTER TAPE (PER ROLL/60M) (-100, -200, -600)	ポリエステルテープ	3 2
*(9384-2391-30)	ACETATE TAPE (PER ROLL) (-100, -200)	アセテートクロステープ	1 2
*(9747-1730-07)	SCREW (-100, -200, -600)	ねじ	2
(9762-1745-07)	SCREW	ねじ	1
2092-0277-01	PANORAMA OPERATION LEVER UNIT-C (-600)	パノラマ可動レバーセットC	1
2092-0278-02	PANORAMA OPERATION LEVER UNIT-B (-600)	パノラマ可動レバーセットB	1
2092-0415-01	FPC-B SET	Bフレキセット	1
2092-2705-03	PANORAMA FRAME PLATE-C (-600)	パノラマ遮光板C	1
2092-2706-03	PANORAMA FRAME PLATE-D (-600)	パノラマ遮光板D	1
2092-2710-03	PANORAMA OPERATION SP-B (-600)	パノラマ騒動SP－B	1
*2092-2721-01	PROTECTION SHEET (-600)	保護シート	2
2097-2721-01	PROTECTION SHEET (-600)	保護シート	2
2089-5051-02	SCREW	ねじ	3
2072-5052-01	AF ADJUSTMENT SP	AF調整SP	3
9795-1837-40	WASHER	ワッシャ	3

7 (2151)A

2151–0131–01 (–100, –200)

2151–0135–01 (–600)

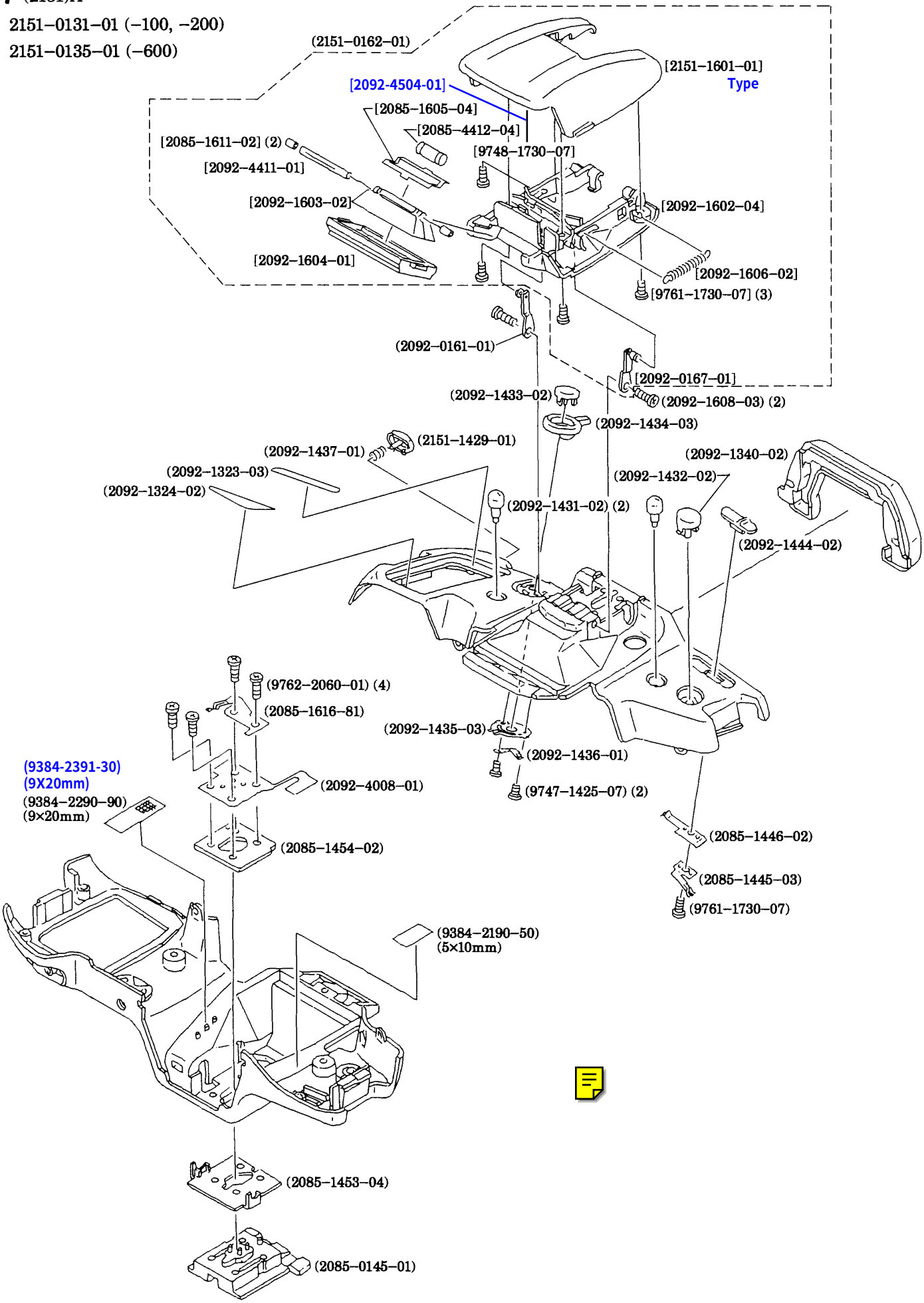

PART NO.	PART NAME		QTY.
2151-0131-01	TOP COVER ASSY (-100, -200)	上カバーセット	1
2151-0135-01	TOP COVER ASSY (-600)	上カバーセット	1
(2085-0145-01)	ACC. SHOE SET	アクセサリーシューセット	1
(2092-0161-01)	FLASH HOLDER UNIT-B	フラッシュ保持レバーセットB	1
(2151-0162-01)	FLASH ASSY	フラッシュユニット	1
[2092-0167-01]	FLASH HOLDER UNIT-A	フラッシュ保持レバーセットA	1
[2151-1601-01]	FLASH COVER	フラッシュカバー	1
[2092-1602-04]	FLASH BASE PLATE	フラッシュ台板	1
[2092-1603-02]	XE HOLDER-A	XEホルダー	1
[2092-1604-01]	FLASH PANEL	発光パネル	1
[2085-1605-04]	XE HOLDER-B	XEチューブ押さえ	1
[2092-1606-02]	UP/DOWN SP	アップ、ダウンSP	1
[2085-1611-02]	RUBBER TUBE	ゴムチューブ	2
[2092-4411-01]	XE TUBE	XEチューブ	1
[2085-4412-04]	TRIGGER COIL	トリガーコイル	1
[9748-1730-07]	SCREW	ねじ	1
[9761-1730-07]	SCREW	ねじ	3
(2092-1323-03)	DOUBLE-FACED TAPE-A	両面テープ-A	1
(2092-1324-02)	DOUBLE-FACED TAPE-B	両面テープ-B	1
(2092-1340-02)	EYEPIECE CUP	アイフード	1
(2151-1429-01)	SPOT BUTTON	スポット釦	1
(2092-1431-02)	DRIVE/SELF BUTTON	ドライブ／セルフ釦	2
(2092-1432-02)	EXPOSURE-MODE BUTTON	モード釦	1
(2092-1433-02)	PROGRAM-RESET BUTTON	P釦	1
(2092-1434-03)	COMMAND SWITCH	S／C切換えレバー	1
(2092-1435-03)	COMMAND SW. CLICK PLATE	S／Cクリック坂	1
(2092-1436-01)	COMMAND SW. CONTACT	S／C接片	1
(2092-1437-01)	APERTURE BUTTON SP	AV釦SP	1
(2092-1444-02)	MAIN SWITCH	メインSWレバー	1
(2085-1445-03)	MAIN SWITCH CONTACT	メインSW接片	1
(2085-1446-02)	MAIN SWITCH CLICK PLATE	メインSWクリック板	1
(2085-1453-04)	SHOE BASE	シュー敷板	1
(2085-1454-02)	SHOE SETTING PLATE	シュー取付板	1
(2092-1608-03)	SCREW	ねじ	2
(2085-1616-81)	POP-UP DETECT CONTACT	ポップアップ検知接片	1
(2092-4008-01)	FPC-H	Hフレキ	1
(2092-4504-01)	FLASH PROTECTION	フラッシュ保護板	1
(9384-2190-50)	DOUBLE-FACED TAPE (PAR ROLL)	両面テープ	1
(9384-2290-90)	POLYESTER TAPE (PER ROLL/60M)	ポリエステルテープ	1
(9384-2391-30)	ACETATE TAPE (PER ROLL)	アセテートクロステープ	1
(9747-1425-07)	SCREW	ねじ	2
(9761-1730-07)	SCREW	ねじ	1
(9762-2060-01)	SCREW	ねじ	4

NON DATE MODEL (–100)

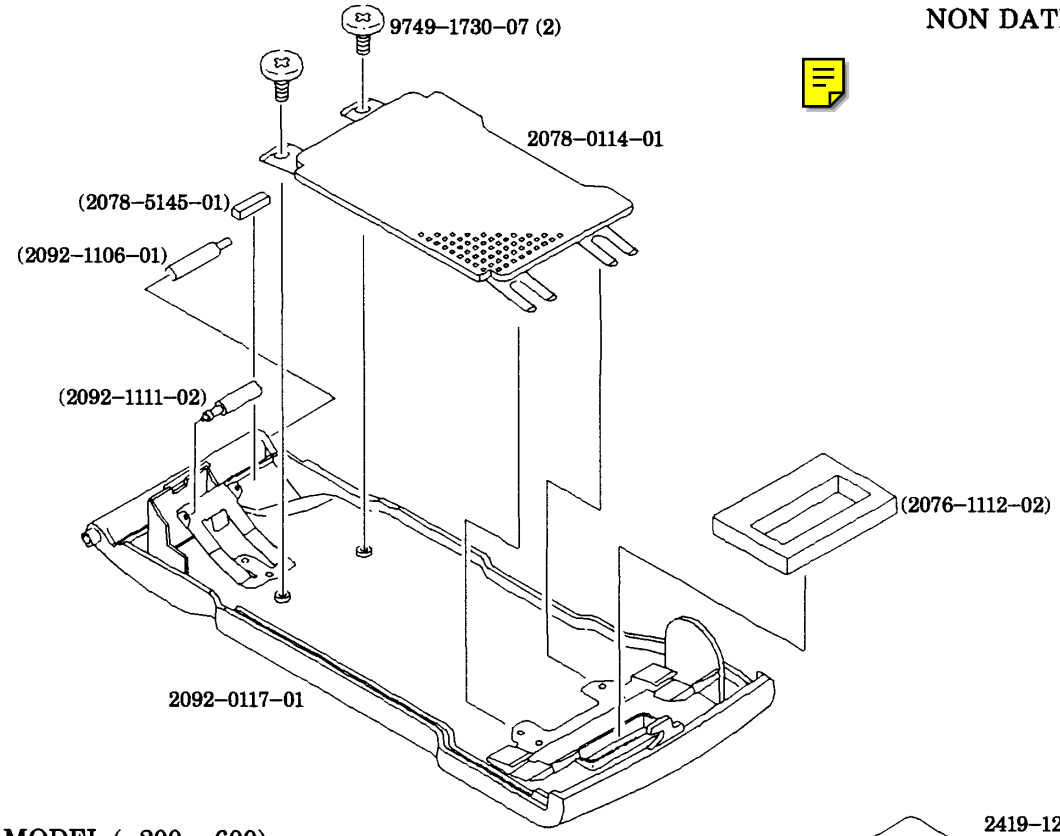

DATE MODEL (–200, –600)

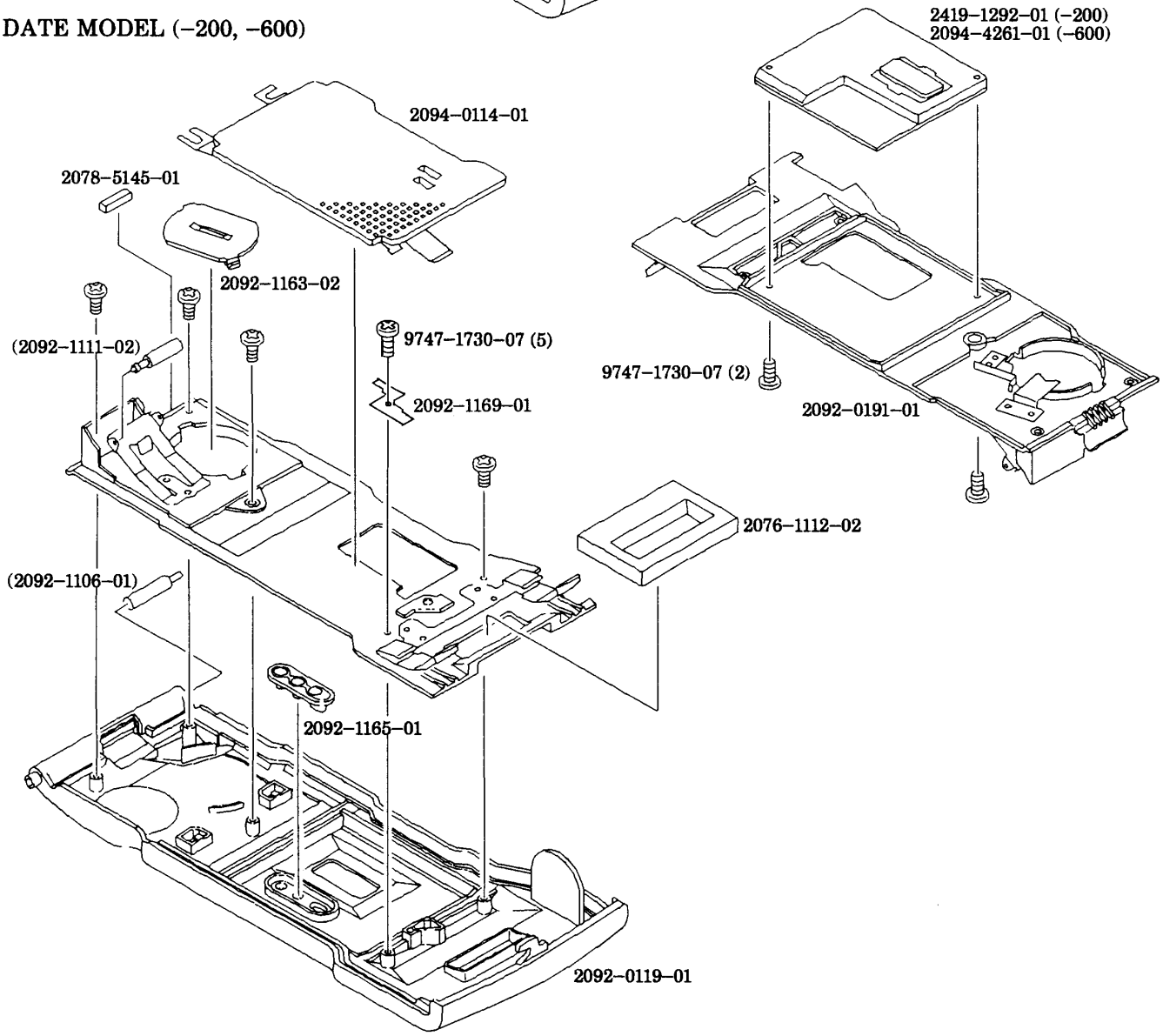

PART NO.	PART NAME		QTY.
	NON DATE MODEL (-100)		
2078-0114-01	PRESSURE PLATE SET	圧着板セット	1
2092-0117-01	BACK COVER UNIT (-100, -300)	裏蓋セット	1
(2092-1106-01)	BACK COVER HINGE AXIS	裏蓋ヒンジ軸	1
(2092-1111-02)	BACK COVER ROLLER	裏蓋可動ローラー	1
(2076-1112-02)	LIGHT SHIELD SPONGE	パト表示窓遮光片	1
(2078-5145-01)	MIRROR CUSION	主ミラークッション	1
9749-1730-07	SCREW	ねじ	2

	DATE MODEL (-200, -600)		
2094-0114-01	PRESSURE PLATE SET	圧着板セット	1
2092-0119-01	BACK COVER UNIT	裏蓋セット	1
(2092-1106-01)	BACK COVER HINGE AXIS	裏蓋ヒンジ軸	1
2092-0191-01	DATE MODULE BASE PLATE UNIT	デートモジュール台板セット	1
(2092-1111-02)	BACK COVER ROLLER	裏蓋可動ローラー	1
2076-1112-02	LIGHT SHIELD SPONGE	パト表示窓遮光片	1
2092-1163-02	BATTERY COVER	電池蓋	1
2092-1165-01	KEY	切換え釦	1
2092-1169-01	PRESSURE PLATE CONDUCTOR	DB圧板導通板	1
2419-1292-01	DATE MODULE (-200)	デートモジュール	1
2094-4261-01	DATE MODULE (-600)	デートモジュール	1
2078-5145-01	MIRROR CUSION	主ミラークッション	1
9747-1730-07	SCREW	ねじ	7

WIRING DIAGRAM 1 (2151)

LEAD WIRES LIST

2076-4401-01	(SHIELD)
2085-4402-03	(W41)
2092-4403-01	(W42)
9391-1210-□□	(W17, W18, W28, W29)
9391-0807-□□	(OTHER)

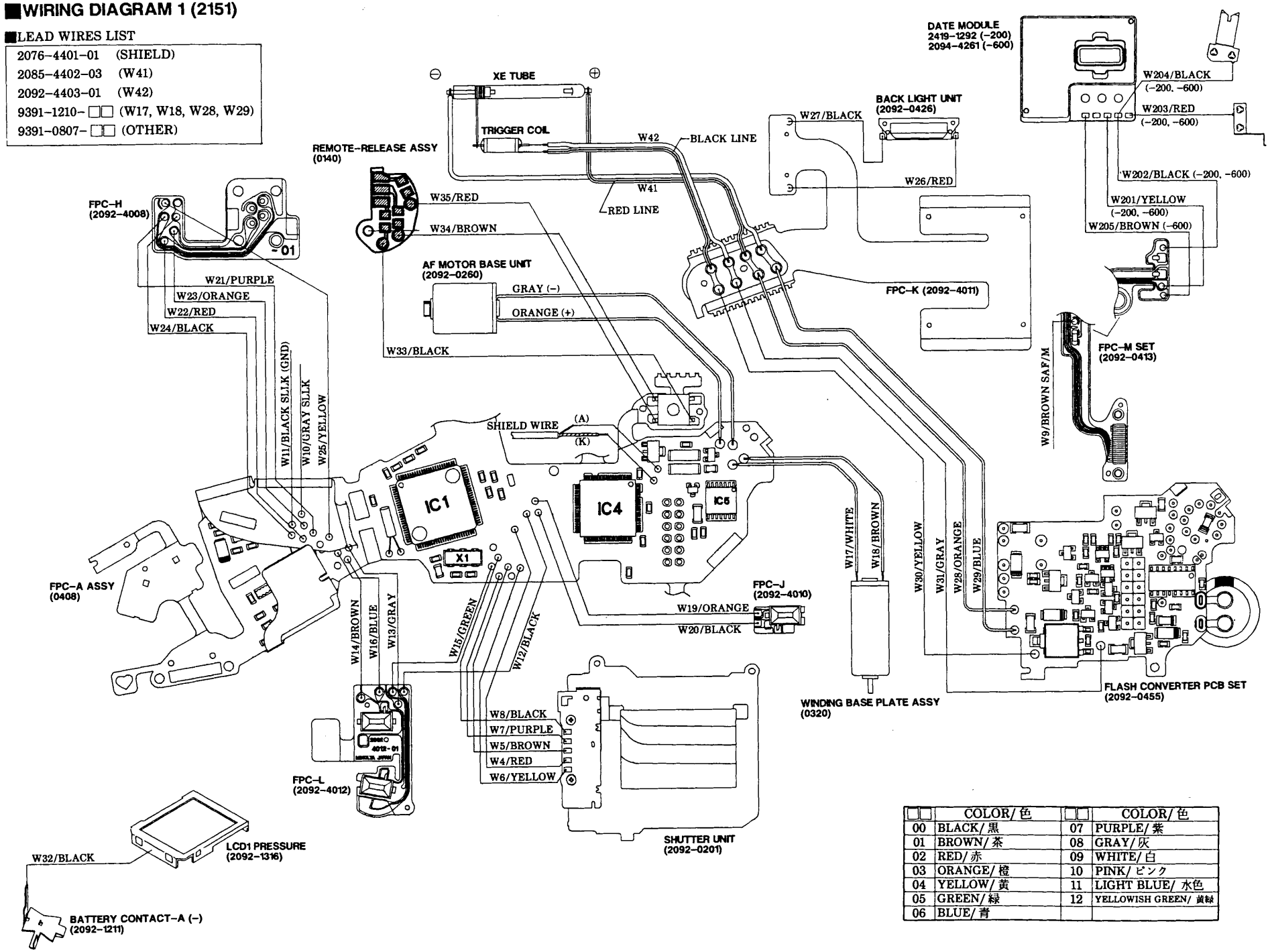

□□	COLOR/色	□□	COLOR/色
00	BLACK/黒	07	PURPLE/紫
01	BROWN/茶	08	GRAY/灰
02	RED/赤	09	WHITE/白
03	ORANGE/橙	10	PINK/ピンク
04	YELLOW/黄	11	LIGHT BLUE/水色
05	GREEN/緑	12	YELLOWISH GREEN/黄緑
06	BLUE/青		

MINOLTA MAXXUM 500si (2151-300)
MINOLTA MAXXUM RZ 530si DATE (2151-450)
MINOLTA MAXXUM 550si PANORAMA DATE (2151-800)
MINOLTA MAXXUM 500si SUPER (2151-850)

■This parts list contains only the exclusive parts for 2151-300/-450/-800/-850.
For parts not listed herein, refer to 2151-100/-200/-600 Parts List. Apply 2151-100 for -300, 2151-200 for -450, 2151-600 for -800 and -850.

■このパーツリストは、2151-300/-450/-800/-850 の専用部品をまとめたものです。
このパーツリスト以外の部品は 2151-300 が-100/ 2151-450 が-200/ 2151-800, -850 が-600 と共通ですので、2151-100/-200/-600 のパーツリストを参照して下さい。

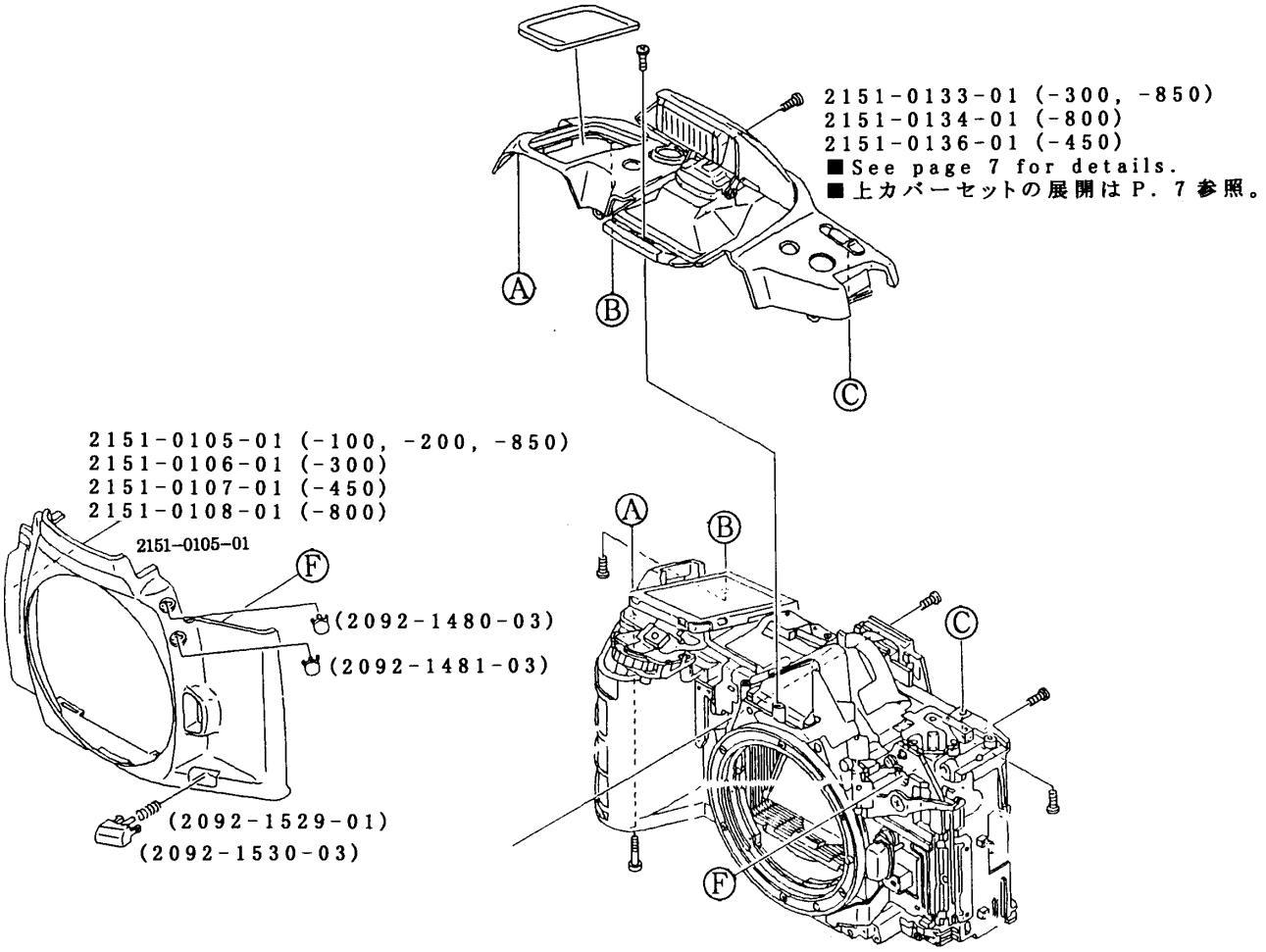

PART NO.	PART NAME		QTY.
2151-0105-01	FRONT COVER ASSY (-100, -200, -850)	前カバーセット	1
2151-0106-01	FRONT COVER ASSY (-300)	前カバーセット	1
2151-0107-01	FRONT COVER ASSY (-450)	前カバーセット	1
2151-0108-01	FRONT COVER ASSY (-800)	前カバーセット	1
2151-0133-01	TOP COVER ASSY (-300, -850)	上カバーセット	1
2151-0134-01	TOP COVER ASSY (-800)	上カバーセット	1
2151-0136-01	TOP COVER ASSY (-450)	上カバーセット	1

MINOLTA α-303si SUPER SILVER (2151-650)

■This parts list contains only the exclusive parts for 2151-650.
For parts not listed herein, refer to 2151-600 Parts List.

■このパーツリストは、2151-650 の専用部品をまとめたものです。
このパーツリスト以外の部品は、2151-600 と共通です。

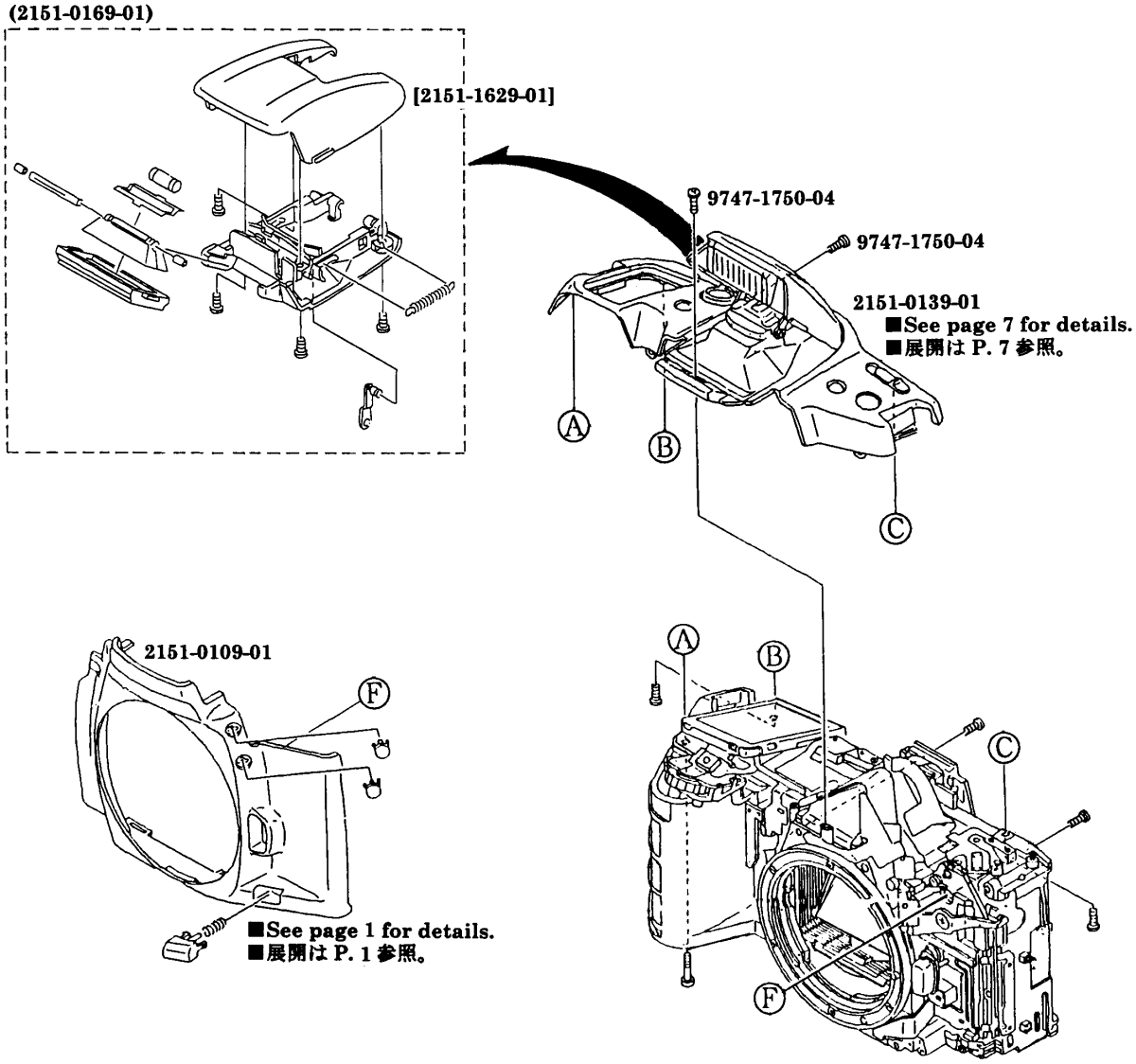

2151-0109-01	FRONT COVER ASSY (-650)	前カバーセット	1
2151-0139-01	TOP COVER ASSY (-650)	上カバーセット	1
(2151-0169-01)	FLASH ASSY (-650)	フラッシュユニット	1
[2151-1629-01]	FLASH COVER (-650)	フラッシュカバー	1
9747-1750-04	SCREW	ねじ	2

MINOLTA DYNAX 500si SUPER (SILVER) (2151-160)

■2151-160 is Panorama Non Date model.
■This parts list contains only the exclusive parts for 2151-160.
Other parts are common to 2151-600 except for Back Cover relative parts (page 8) which are common to 2151-100.

■この製品は、パノラマ付き、NON DATE モデルです。
■このパーツリストは、2151-160 の専用部品をまとめたものです。
このパーツリスト以外の部品 (裏蓋関係を除く)は、2151-600 と共通です。
但し、NON DATE のため裏蓋関係 (パーツリスト P. 8)は、2151-100 と共通です。

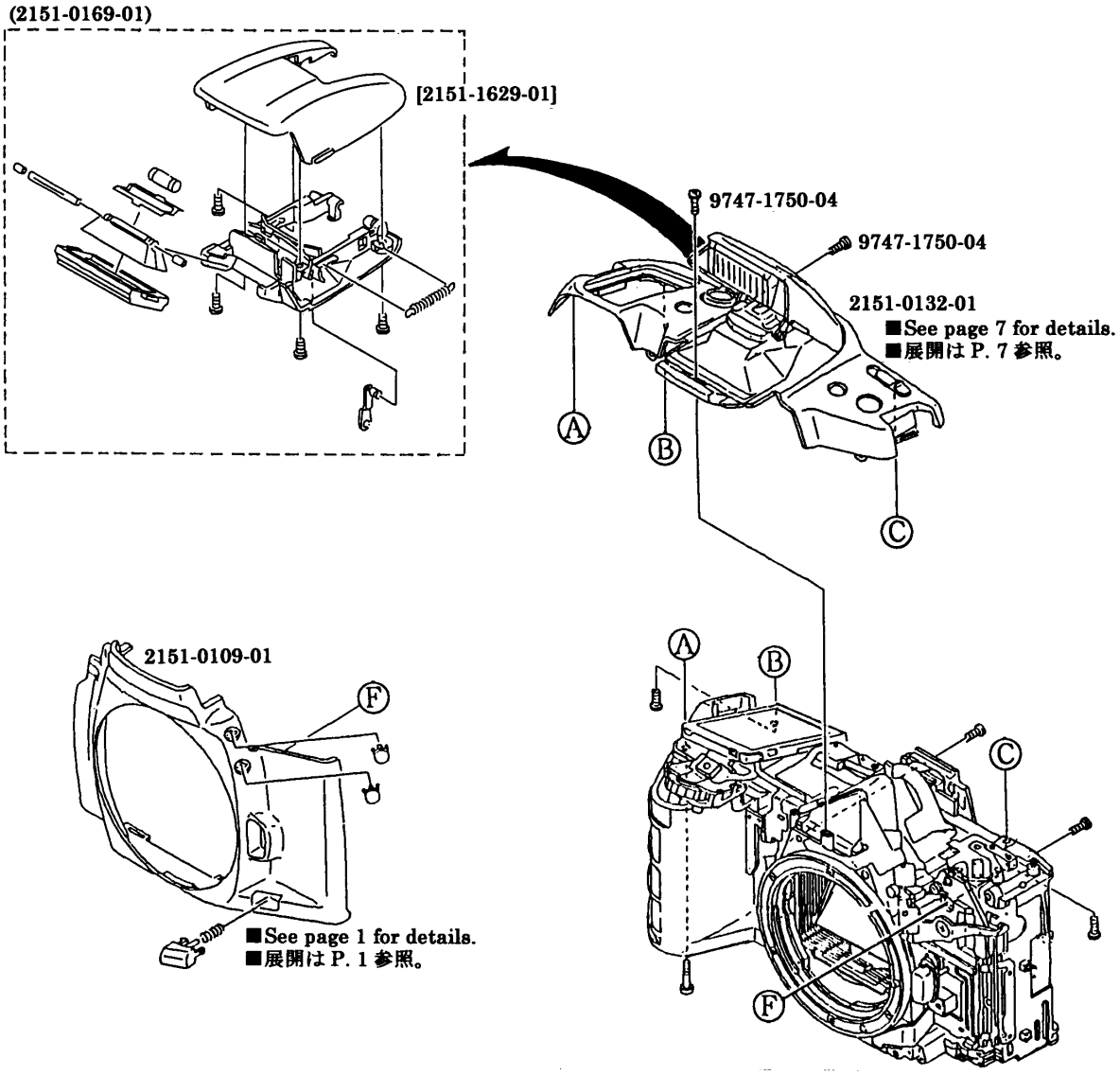

2151-0109-01	FRONT COVER ASSY (-160, 650)	前カバーセット	1
2151-0132-01	TOP COVER ASSY (-160)	上カバーセット	1
(2151-0169-01)	FLASH ASSY (-160, -650)	フラッシュユニット	1
[2151-1629-01]	FLASH COVER (-160, -650)	フラッシュカバー	1
9747-1750-04	SCREW	ねじ	2

管理 No. REF No.	10-2151-001

PARTS MODIFICATION LIST

■No. 001 Parts List P. 4 仮-508

変更理由 REASON	歪み防止 To keep prism in shape			共通機種 COMMON MODEL	2151 Series	
Previous	9384-2391-30	→ --	-- ←	9384-2391-30		New

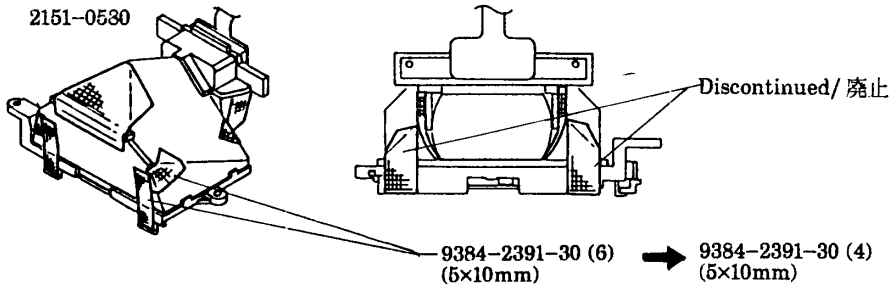

■本案内に従い、パーツリストへ転記等、メンテナンスを行って下さい。
According to this list, correct "Part List" in Service Manual for effective parts management.

MINOLTA CO.,LTD.

管理 No. REF No.	10-2151-002

PARTS MODIFICATION LIST

■No. 002 Parts List P. 3 2151-545

変更理由 REASON	異音防止 To reduce noise	共通機種 COMMON MODEL	2151 Series

Previous	----------	→ --	-- ←	2151-3056-02	New

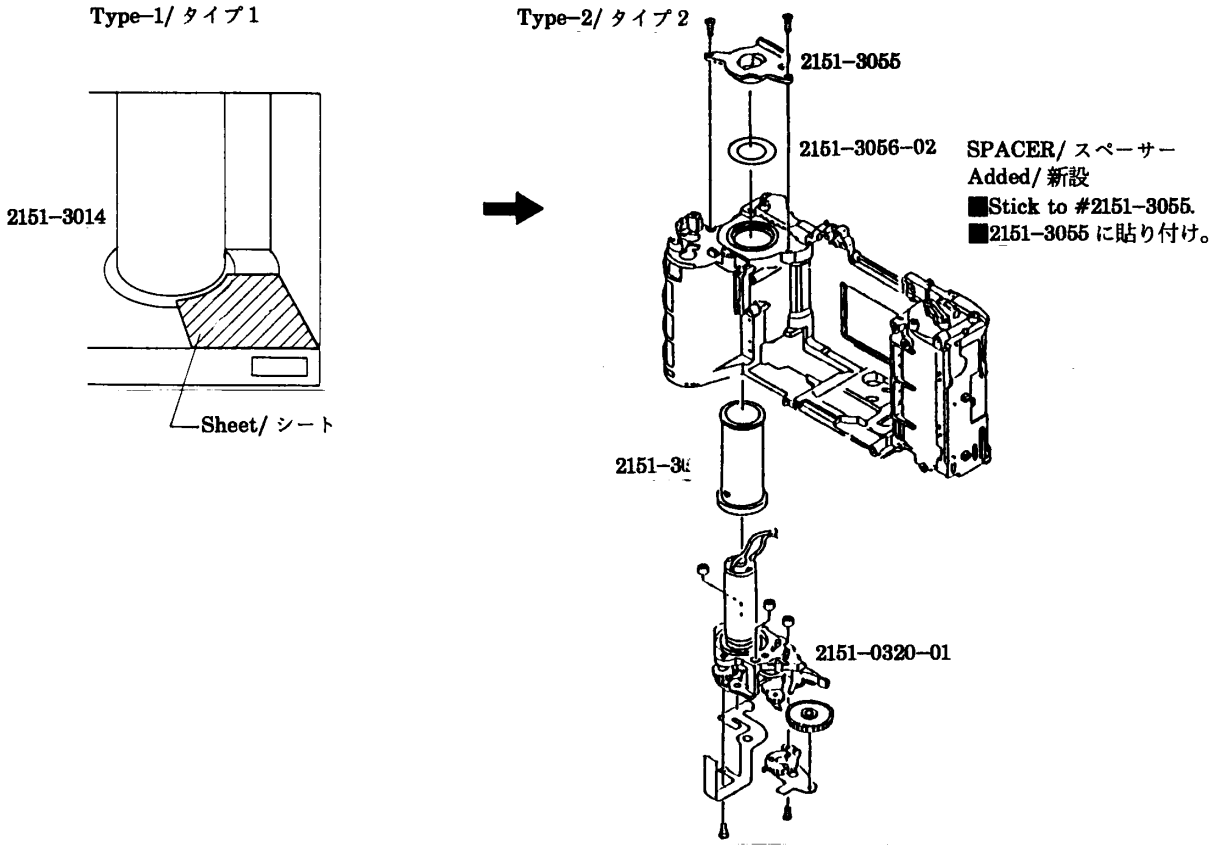

- タイプ1のシートは供給しません。
- タイプ1のシートが貼り付いている場合は、スペーサー(2151-3056-02) は不要です。
- The sheet for the type-1 is not available as a service part.
- The Spacer #2151-3056-02 is not needed for the type-1 having the sheet installed.

■本案内に従い、パーツリストへ転記等、メンテナンスを行って下さい。
According to this list, correct "Part List" in Service Manual for effective parts management.

MINOLTA CO.,LTD.

管理 No. REF No.	10-2151-003

PARTS MODIFICATION LIST

■No. 003 Parts List P. 4 2092-510

変更理由 REASON	ショート防止 To prevent short-circuit			共通機種 COMMON MODEL	2151 Series	
Previous	----------	→ --	-- ←	9384-2391-30		New

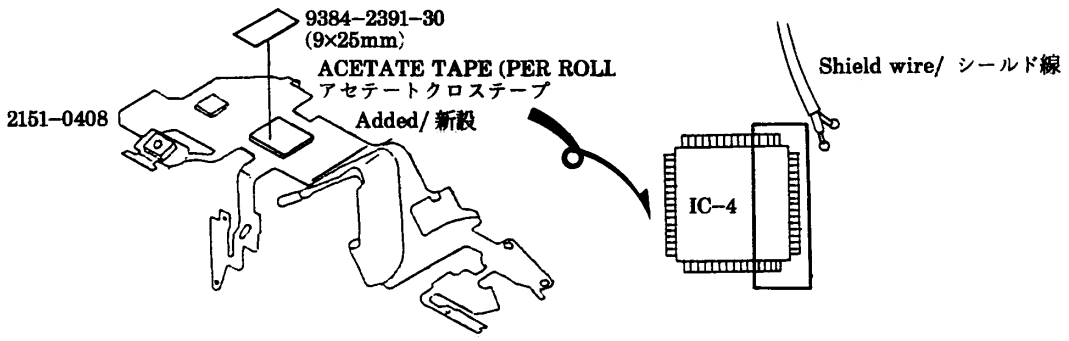

管理 No. REF No.	10-2151-004

■No. 004 Parts List P. 6 2151-542

変更理由 REASON	生産都合 For efficient production			共通機種 COMMON MODEL	2151 Series	
Previous	9384-2290-90	→ --	-- ←	----------		New

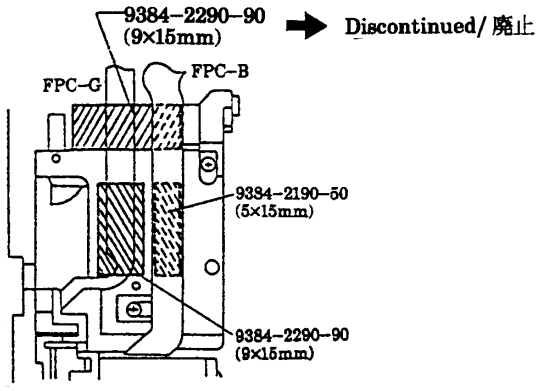

■本案内に従い、パーツリストへ転記等、メンテナンスを行って下さい。
According to this list, correct "Part List" in Service Manual for effective parts management.

MINOLTA CO.,LTD.

管理 No. REF No.	10-2151-005

PARTS MODIFICATION LIST

■No. 005 Parts List P. 7 2092-511

変更理由 REASON	粘着強度の向上 To improve adhesion			共通機種 COMMON MODEL	2151 Series	
Previous	9384-2290-90	→○	×←	9384-2391-30		New

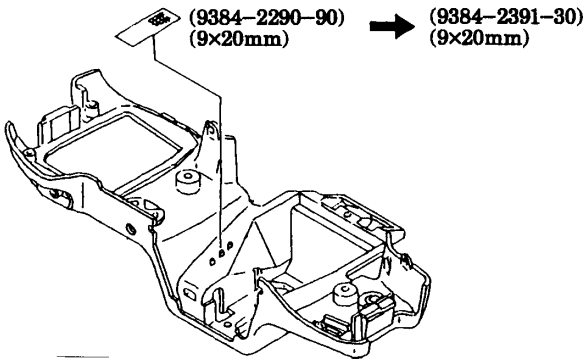

■本案内に従い、パーツリストへ転記等、メンテナンスを行って下さい。
According to this list, correct "Part List" in Service Manual for effective parts management.

MINOLTA CO.,LTD.

管理No. REF No.	QS FA 2155-P004

PARTS MODIFICATION LIST

■No. 004 Parts List P. 8 仮-686

変更理由 REASON	サービス用部品として供給 Added as a service part			共通機種 COMMON MODEL	2155 Series	
Previous	―――――――	――	――	(2017-0493-03)		New

P. 6

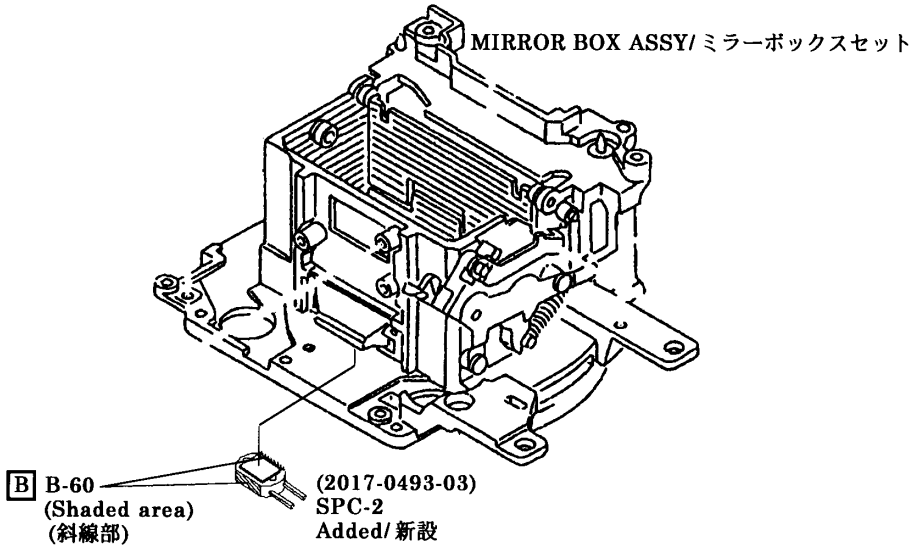

- SPC-2 #2017-0493-03 is applicable to these models; 2081, 2082, 2084, 2085, 2087, 2089, 2092, 2093, 2094, 2095, 2096, 2097, 2099, 2151, 2152, 2153, 2154, 2155.
- This PML for 2155 represents all models.
- Application availability is unknown to other models than above.
- SPC-2 (2017-0493-03)は以下の機種で共通使用可能です。
  但し、PMLは2155のみでの発行とします。
  2081, 2082, 2084, 2085, 2087, 2089, 2092, 2093, 2094, 2095, 2096, 2097, 2099, 2151, 2152, 2153, 2154, 2155.
- 上記機種以外では、未調査です。

■本案内状に従い、パーツリストへの転記等、メンテナンスを行なってください。
According to this list, correct "Parts List" in Service Manual for effective parts management.

MINOLTA CO.,LTD.

管理 No. REF No.	10-2151-006

PARTS MODIFICATION LIST

■No. 006 Parts List P. 2 2092-437

変更理由 REASON	生産都合 / For efficient production			共通機種 COMMON MODEL	2151 Series	
Previous	2092-0201-01	→ —	— ←	2092-0201-01		New

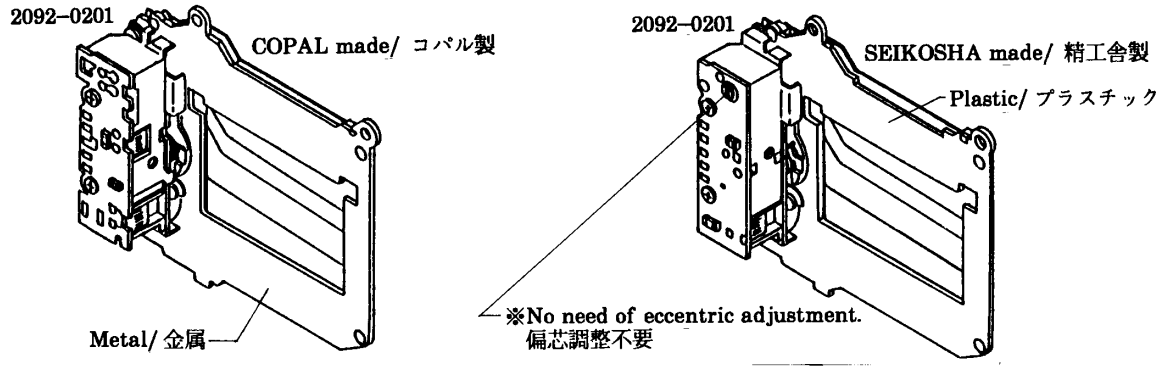

- 2 種類のシャッターがありますが互換性はあります。
- There are two types of Shutter Unit #2092-0201-01.
  They are interchangeable.

管理 No. REF No.	10-2151-007

■No. 007 Parts List P. 6 2092-503

変更理由 REASON	ねじ締めつけによる浮き防止 / To secure screw			共通機種 COMMON MODEL	2151 Series	
Previous	2092-2703-01	→○	× ←	2092-2703-02		New

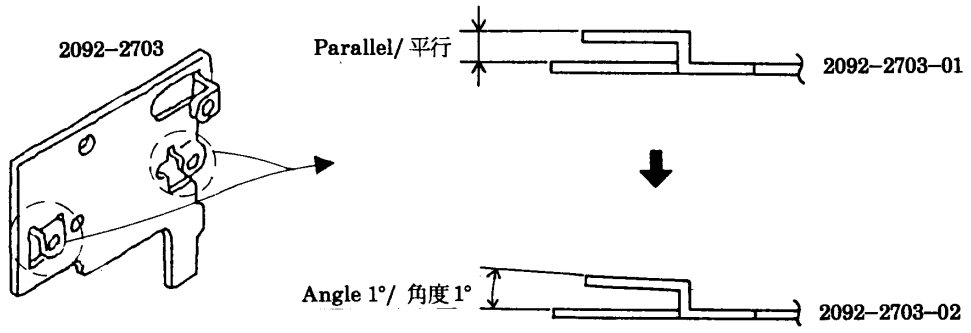

- パノラマタイプは -02 を使用のこと、パノラマタイプ以外は -01, -02 どちらも使用できます。
- 部品の見分けが付きにくいため、部品 No. で管理して下さい。
- For panorama models, use the type -02 exclusively.
  For other models, use either type.
- Arrange type -01 and -02 carefully because they are hard to be distinguished.

■本案内に従い、パーツリストへ転記等、メンテナンスを行って下さい。
According to this list, correct "Part List" in Service Manual for effective parts management.

MINOLTA CO.,LTD.

管理 No. REF No.	10-2151-008

PARTS MODIFICATION LIST

■No. 008 Parts List P. 6 2092-515

変更理由 REASON	F ゴミ及び、はがれの改善 To prevent floating and viewfinder stain			共通機種 COMMON MODEL	2151-600
Previous	2092-2721-01	→○	×←	2097-2721-01	New

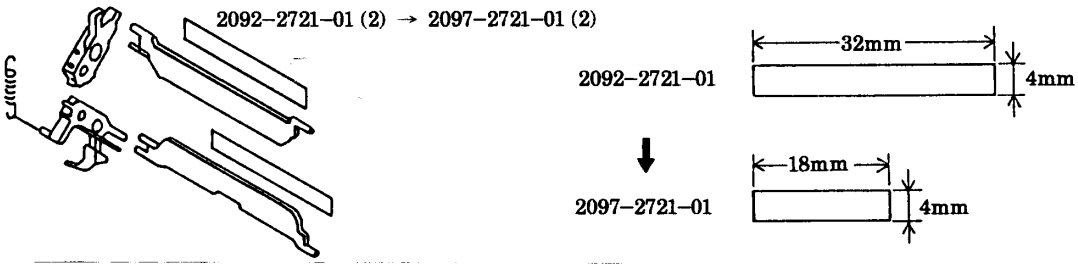

管理 No. REF No.	10-2151-009

■No. 009 Parts List P. 2 2092-533

変更理由 REASON	生産都合 For efficient production			共通機種 COMMON MODEL	2151 Series
Previous	2078-3030-01	→--	--←	2078-3030-01	New

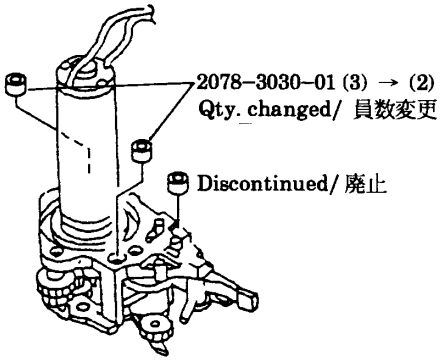

■本案内に従い、パーツリストへ転記等、メンテナンスを行って下さい。
According to this list, correct "Part List" in Service Manual for effective parts management.

MINOLTA CO.,LTD.

管理 No. REF No.	QS FA 2151-P010

PARTS MODIFICATION LIST

■No. 010 Parts List P. 1 仮501

変更理由 REASON	管理 No. のみ変更 Change in parts No.			共通機種 COMMON MODEL	2092, 2420, 2428, 2429, 2151
Previous	2092-1061-02	→○	○←	2440-1993-01	New
Previous	2420-1993-01				
Previous	2428-1991-01				
Previous	2429-1993-01				

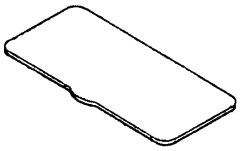

OSAKA JAPAN
MADE IN MALAYSIA

管理 No. REF No.	QS FA 2151-P011

■No. 011 Parts List P. 1 2440-80

変更理由 REASON	生産都合 For efficient production			共通機種 COMMON MODEL	2092, 2420, 2428, 2429, 2151
Previous	2440-1993-01	→○	○←	2440-1993-02	New

2440-1993-01

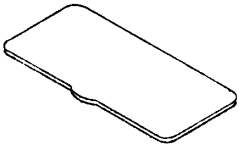

黒色 /Black

OSAKA JAPAN
MADE IN MALAYSIA

2440-1993-02

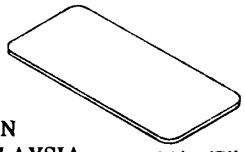

銀色 /Silver

■本案内に従い、パーツリストへ転記等、メンテナンスを行って下さい。
According to this list, correct "Part List" in Service Manual for effective parts management.

MINOLTA CO.,LTD.

管理 No. REF No.	QS FA 2151-P012

PARTS MODIFICATION LIST

■No. 012 Parts List P. 1 仮502

変更理由 REASON	管理 No. のみ変更 Change in parts No.			共通機種 COMMON MODEL	2089, 2092, 2097, 2151, 2099, 2420, 2428
Previous	2089-1060-01	→○	○←	2440-1991-02	New
Previous	2092-1060-01				
Previous	2097-1060-01				
Previous	2099-1060-01				
Previous	2420-1991-01				
Previous	2428-1991-01				

JAPAN

管理 No. REF No.	QS FA 2151-P013

■No. 013 Parts List P. 1 2440-80

変更理由 REASON	生産都合 For efficient production			共通機種 COMMON MODEL	2089, 2092, 2097, 2151, 2099, 2420, 2428
Previous	2440-1991-02	→○	○←	2440-1991-03	New

2440-1991-02

黒色 /Black

JAPAN

2440-1991-03

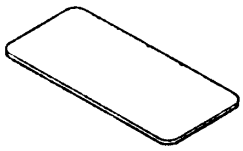

銀色 /Silver

■本案内に従い、パーツリストへ転記等、メンテナンスを行って下さい。
According to this list, correct "Part List" in Service Manual for effective parts management.

MINOLTA CO.,LTD.

管理 No. REF No.	QS FA 2151-P014

PARTS MODIFICATION LIST

■ No. 014 Parts List P. 2, 3 2151-546

変更理由 REASON	異音防止 / To reduce noise	共通機種 COMMON MODEL	2151 Series

Previous	2151-3014-02	→×	×←	2151-3014-03	New

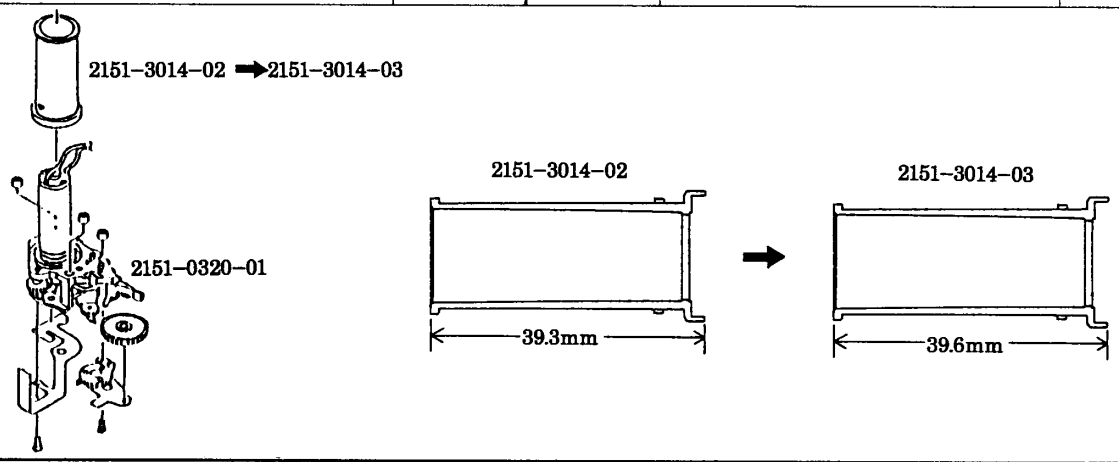

(P. 2)

Previous	2151-3056-02	→--	--←	----------	New

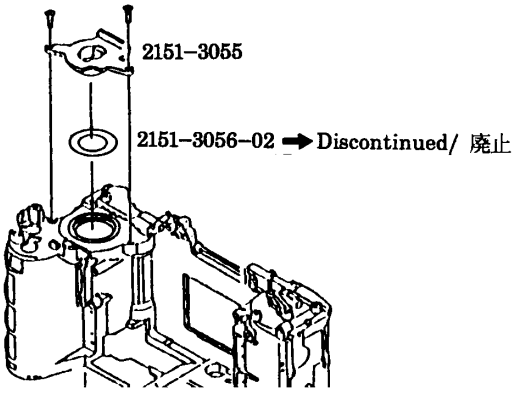

(P. 3)

- 2151-3014-02 を使用する場合は、2151-3056-02 といっしょに使用して下さい。
- 2151-3014-03 を使用する場合は、2151-3056-02 は不要です。
- #2151-3014-02 requires #2151-3056-02.
- #2151-3014-03 doesn't require #2151-3056-02.

セットでの互換性 /Interchangeability as a set	Previous	→○	○←	New

■本案内に従い、パーツリストへ転記等、メンテナンスを行って下さい。
According to this list, correct "Part List" in Service Manual for effective parts management.

MINOLTA CO.,LTD.

管理 No. REF No.	QS FA 2151-P015

PARTS MODIFICATION LIST

■No. 015 Parts List P. 4 仮-521

変更理由 REASON	生産都合 For efficient production	共通機種 COMMON MODEL	2151 Series

Previous	2151-0580-01	→×	×←	2151-0581-01	New
Previous	(2151-5805-01)	→--	--←	2151-5805-01	New

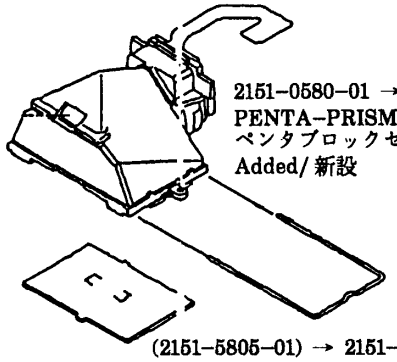

2151-0580-01 → 2151-0581-01
PENTA-PRISM ASSY
ペンタブロックセット
Added/ 新設

(2151-5805-01) → 2151-5805-01

- #0581 doesn't include #5805 as an unit, but it initially has a nonconformable #5805 for the sake of dust proof. Be sure to replace the nonconformable #5805 before using #0581.
- 0580 の構成から、5805 が外れた部品が 0581 です。
  但し、防塵のためキズの付いた焦点板が付いています、0581 を使用する場合、焦点板を交換して使用して下さい。

セットでの互換性 /Interchangeability as a set	Previous	→○	○←	New

■本案内に従い、パーツリストへ転記等、メンテナンスを行って下さい。
According to this list, correct "Part List" in Service Manual for effective parts management.

MINOLTA CO.,LTD.

管理 No. REF No.	QS FA 2151-P016

PARTS MODIFICATION LIST

■No. 016 Parts List P. 6 2092-546, 547

変更理由 REASON	生産都合 For efficient production			共通機種 COMMON MODEL	2151-100, -200
Previous	2092-2703-02	→ --	-- ←	----------	New
Previous	9747-1730-07	→ --	-- ←	----------	New
Previous	9384-2290-90	→ --	-- ←	----------	New
Previous	9384-2190-50	→ --	-- ←	9384-2190-50	New
Previous	9384-2391-30	→ --	-- ←	9384-2391-30	New

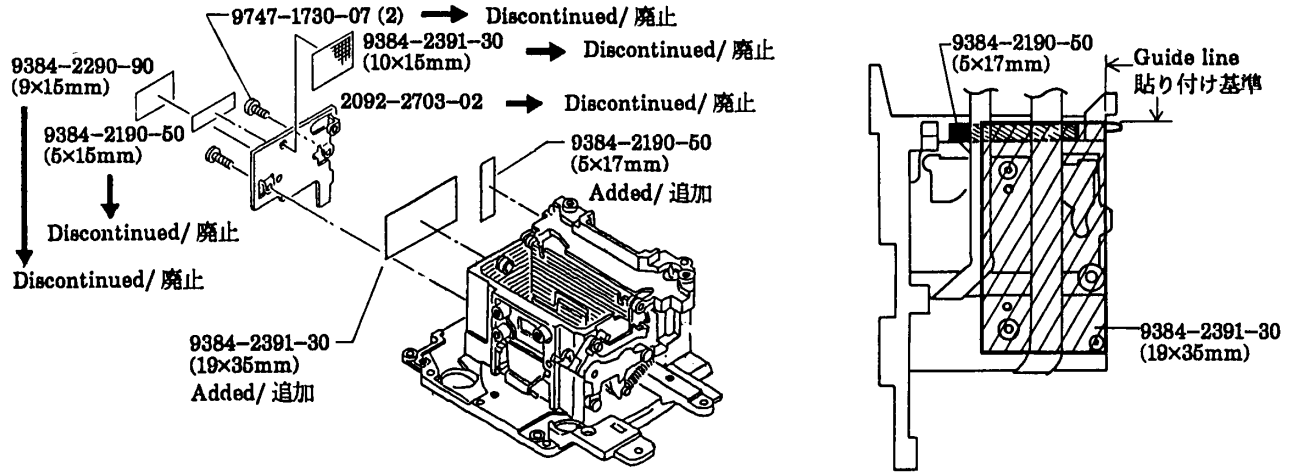

■本案内に従い、パーツリストへ転記等、メンテナンスを行って下さい。
According to this list, correct "Part List" in Service Manual for effective parts management.

MINOLTA CO.,LTD.

管理 No. REF No.	QS FA 2151-P017

PARTS MODIFICATION LIST

■No. 017 Parts List P. 7 2151-568

変更理由 REASON	スパーク対策 To prevent spark	共通機種 COMMON MODEL	2092 Series

Previous	2151-1601-01	→--	--←	2151-1601-01	New

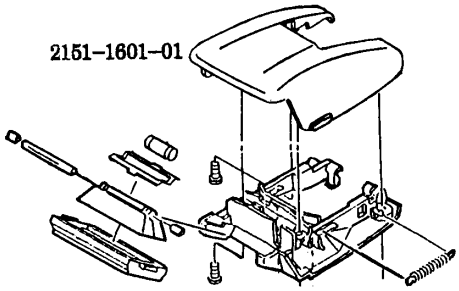

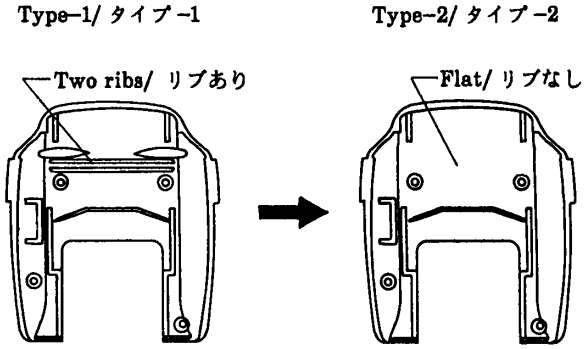

Previous	----------	→--	--←	2092-4504-01	New

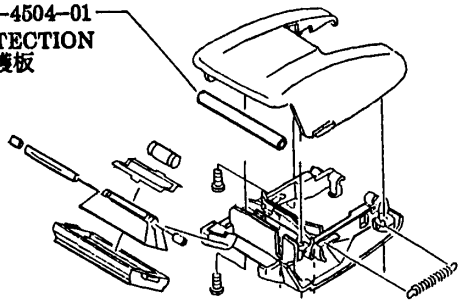

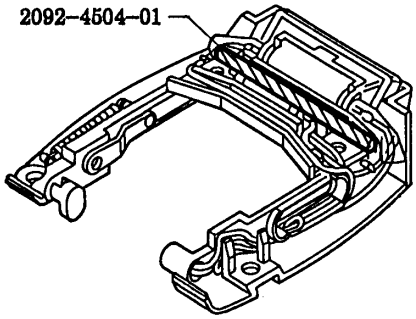

• #2092-4504-01 is not needed for type-1 of #2151-1601-01.
• 2151-1601-01 がタイプ-1 の場合、2092-4504-01 は不要です。

セットでの互換性 /Interchangeability as a set	Previous	→○	○←	New

■本案内に従い、パーツリストへ転記等、メンテナンスを行って下さい。
According to this list, correct "Part List" in Service Manual for effective parts management.

MINOLTA CO.,LTD.

管理 No. REF No.	QS FA 2151-P018

PARTS MODIFICATION LIST

■No. 018 Parts List P. 2 2092-534

変更理由 REASON	生産都合 For efficient production	共通機種 COMMON MODEL	2151 Series

Previous	2092-0455-01	→ ---	--- ←	2092-0455-01	New

2092-0455-01

Type-1/ タイプ-1

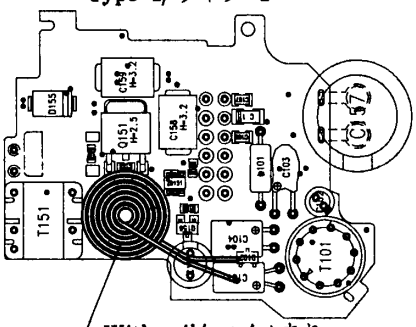

With coil/ コイルあり

Type-2/ タイプ-2

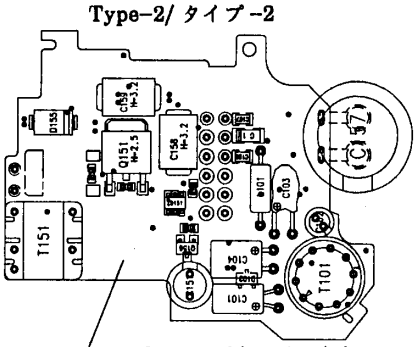

Without coil/ コイルなし

- Type-1 and -2 are interchangeable. Only the type-1 is a service part.
- The type-2 is not applicable to #2753 or #2754.
- タイプ-1、タイプ-2 は互換性あり、サービス供給はタイプ-1 のみです。
- 但し、2753, 2754 にタイプ-2 は使用できません。

■本案内に従い、パーツリストへ転記等、メンテナンスを行って下さい。
According to this list, correct "Part List" in Service Manual for effective parts management.

MINOLTA CO.,LTD.

管理 No. REF No.	QS FA 2151-P019

PARTS MODIFICATION LIST

■No. 019 Parts List P. 6

変更理由 REASON	生産都合 For efficient production			共通機種 COMMON MODEL	2151-100, -200
Previous	9384-2190-50	→○	×←	9384-2190-60	New
Previous	9384-2391-30	——	——	9384-2391-30	New

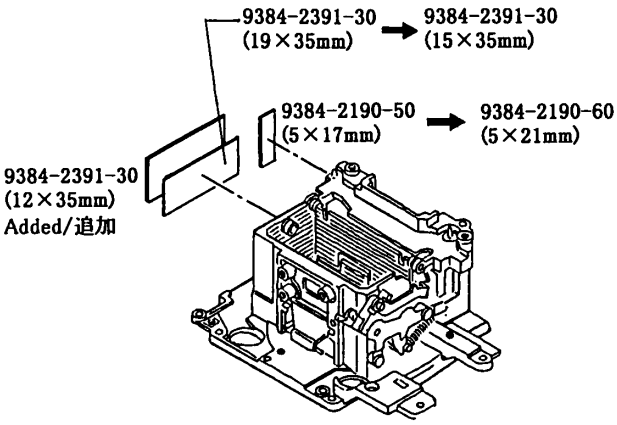

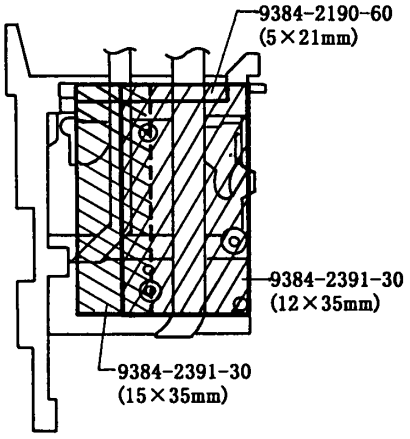

管理 No. REF No.	QS FA 2151-P020

■No. 020 Parts List P. 4

変更理由 REASON	生産都合 For efficient production			共通機種 COMMON MODEL	2151 Series
Previous	————	——	——	9384-2391-20	New

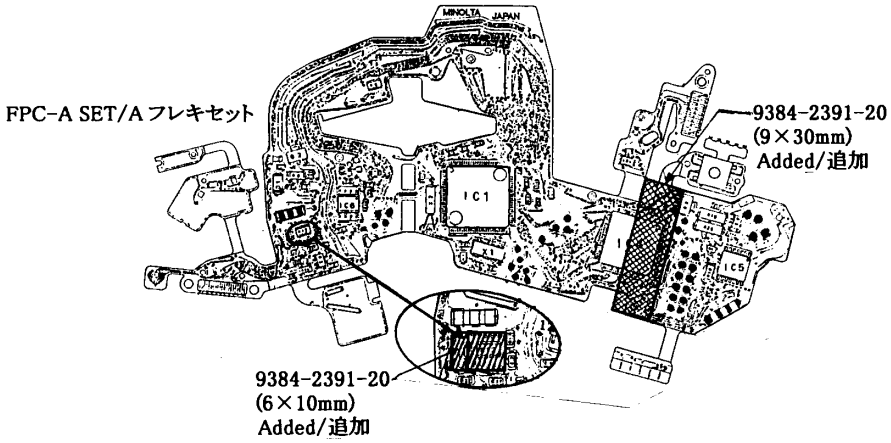

■本案内状に従い、パーツリストへの転記等、メンテナンスを行なって下さい。
According to this list, correct "Parts List" in Service Manual for effective parts management.
MINOLTA CO., LTD.

管理 No. REF No.	QS FA 2151-P021

PARTS MODIFICATION LIST

■No. 021 Parts List P. 4 仮-599

変更理由 REASON	工程変更による単品展開 Single supply due to process change			共通機種 COMMON MODEL	2151 Series	
Previous	————	——	——	2092-4512-04		New

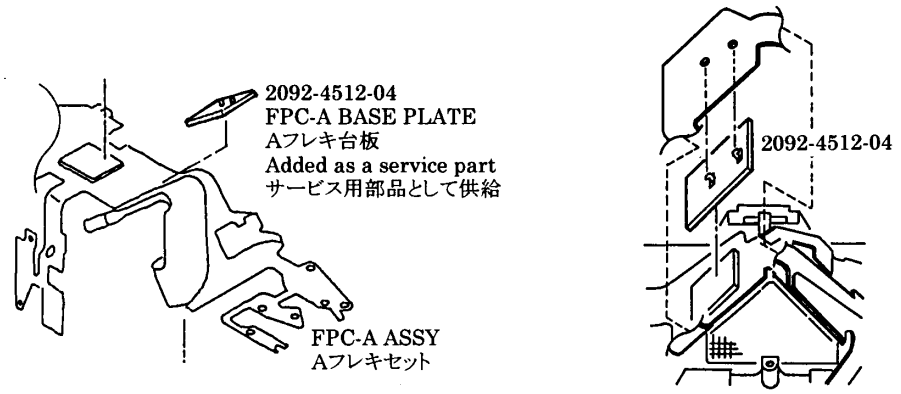

■本案内状に従い、パーツリストへの転記等、メンテナンスを行なって下さい。
According to this list, correct "Parts List" in Service Manual for effective parts management.
MINOLTA CO., LTD.

管理 No. REF No.	QS FA 2151-P022

PARTS MODIFICATION LIST

■No. 022 Parts List P. 2 仮-636

変更理由 REASON	サービス用部品として供給 Added as a service part			共通機種 COMMON MODEL	2151 Series
Previous	————	——	——	9362-5362-41	New

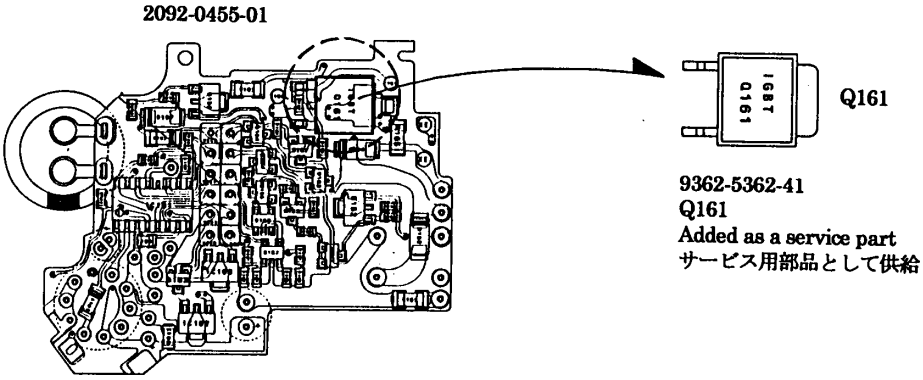

■本案内状に従い、パーツリストへの転記等、メンテナンスを行なって下さい。
According to this list, correct "Parts List" in Service Manual for effective parts management.
MINOLTA CO., LTD.

管理 No. REF No.	QS FA 2151-P023

PARTS MODIFICATION LIST

■No. 023 Parts List P. 2 2151-550、-551

変更理由 REASON	コストダウン To reduce cost			共通機種 COMMON MODEL	2151 Series
~~Previous~~	2092-0455-01	→○	○←	2092-0452-01	New

2092-0455-01

2092-0452-01
FLASH CONVERTER PCB ASSY
フラッシュコンバーター基板セット
Added/新設

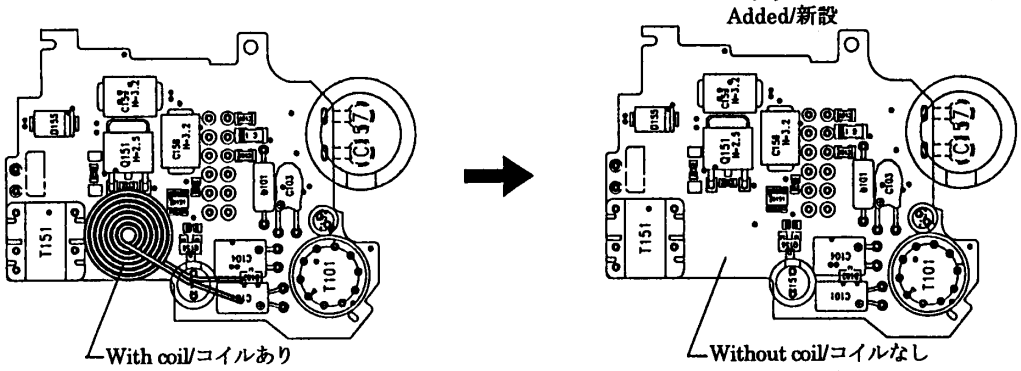

・The type-1 of #2092-0455-01 on PML QS FA 2092-P058, 2151-P018 is no longer available.
The type-2 of #2092-0455-01 is now available with parts No. #2092-0452-01.
・PML QS FA 2092-P058, 2151-P018 で案内している 2092-0455-01 のタイプ-1 が供給不可となり、タイプ-2 を 2092-0452-01 として供給します。

■本案内状に従い、パーツリストへの転記等、メンテナンスを行なって下さい。
According to this list, correct "Parts List" in Service Manual for effective parts management.
MINOLTA CO., LTD.

管理No. REF No.	QS FA 2151-P024

PARTS MODIFICATION LIST

■No. 024 Parts List P. 3 2092-617

変更理由 REASON	電池接触面の改善 To improve battery contact efficiency	共通機種 COMMON MODEL	2151 Series

Previous	2092-1211-01	→×	×←	2092-1211-02	New

2092-1211-01

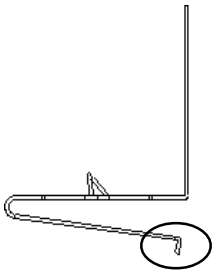

2092-1211-02

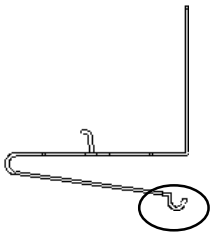

Previous	2082-1212-08	→×	×←	2082-1212-09	New

2082-1212-08

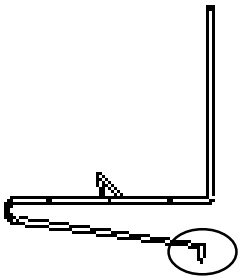

2082-1212-09

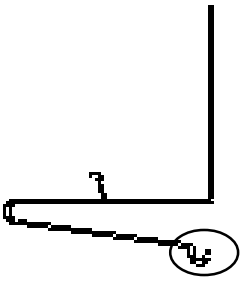

Interchangeability as a set/セットでの互換性	Previous	→○	×←	New

■本案内状に従い、パーツリストへの転記等、メンテナンスを行なってください。
According to this list, correct "Parts List" in Service Manual for effective parts management.

MINOLTA CO.,LTD.

管理No. REF No.	QS FA 2151-P025

PARTS MODIFICATION LIST

■No. 025 Parts List P. 4 仮-688

変更理由 REASON	手配都合 For efficient parts supply			共通機種 COMMON MODEL	2151 Series	
Previous	―――――――	――	――	(9366-4061-01)		New

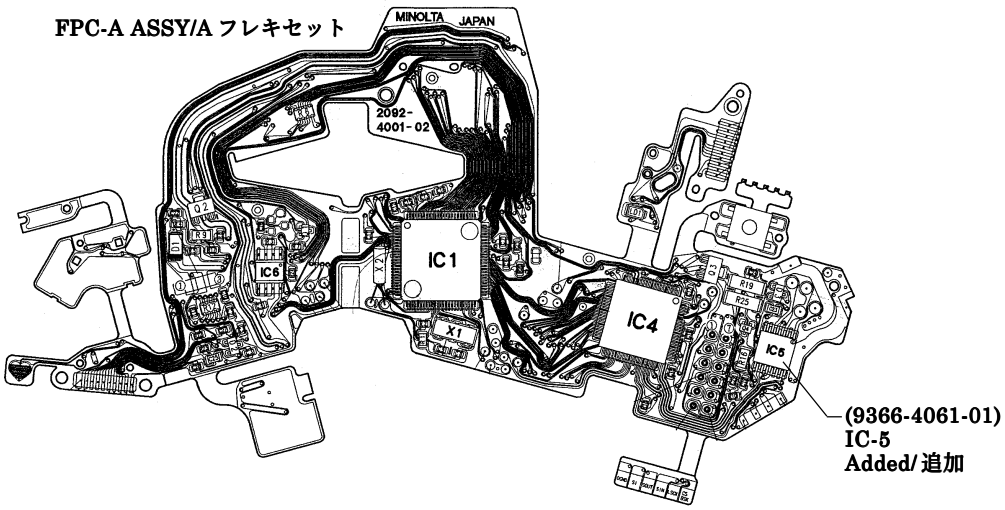

■本案内状に従い、パーツリストへの転記等、メンテナンスを行なってください。
According to this list, correct "Parts List" in Service Manual for effective parts management.

MINOLTA CO.,LTD.

管理No. REF No.	QS FA 2151-P026

PARTS MODIFICATION LIST

■No. 026 Parts List P. 6 仮-690

変更理由 REASON	サービス用部品として供給 Added as a service part			共通機種 COMMON MODEL	2151 Series
Previous	―――――――	――	――	(2092-5112-02)	New

MIRROR BOX ASSY
ミラーボックスセット

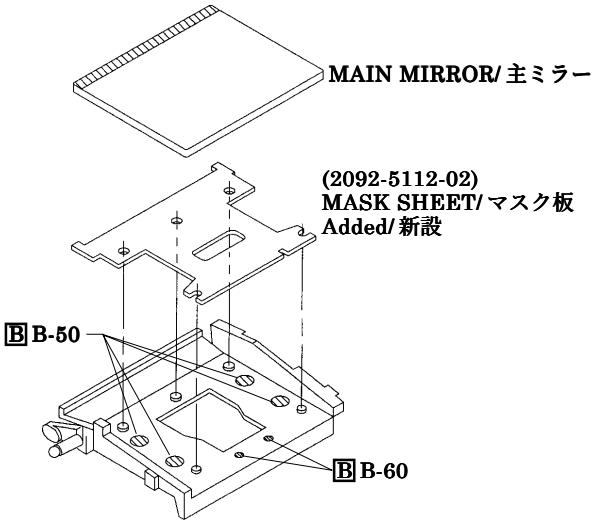

■本案内状に従い、パーツリストへの転記等、メンテナンスを行なってください。
According to this list, correct "Parts List" in Service Manual for effective parts management.

MINOLTA CO.,LTD.

管理No. REF No.	QS FA 2151-P027

PARTS MODIFICATION LIST

■No. 027 Parts List P. 2 仮-700 SUPPLEMENTARY INFORMATION No. 2092-005

変更理由 REASON	サービス部品として供給 Added as service parts			共通機種 COMMON MODEL	2151 Series
Previous	————	——	——	(2092-0308-01)	New
Previous	————	——	——	(2151-0312-01)	New
Previous	————	——	——	(2151-3001-04)	New
Previous	————	——	——	(2151-3002-02)	New
Previous	————	——	——	(2151-3003-02)	New
Previous	————	——	——	(9791-1840-40)	New

※ For assembly procedure except for the Fig box, see No. 2092-005, SUPPLEMENTARY INFORMATION.
※ Fig. 以外の組立て要領は、サプリメンタリーインフォメーション No.2092-005 を参照してください。

■ Fig.

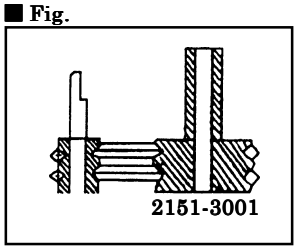

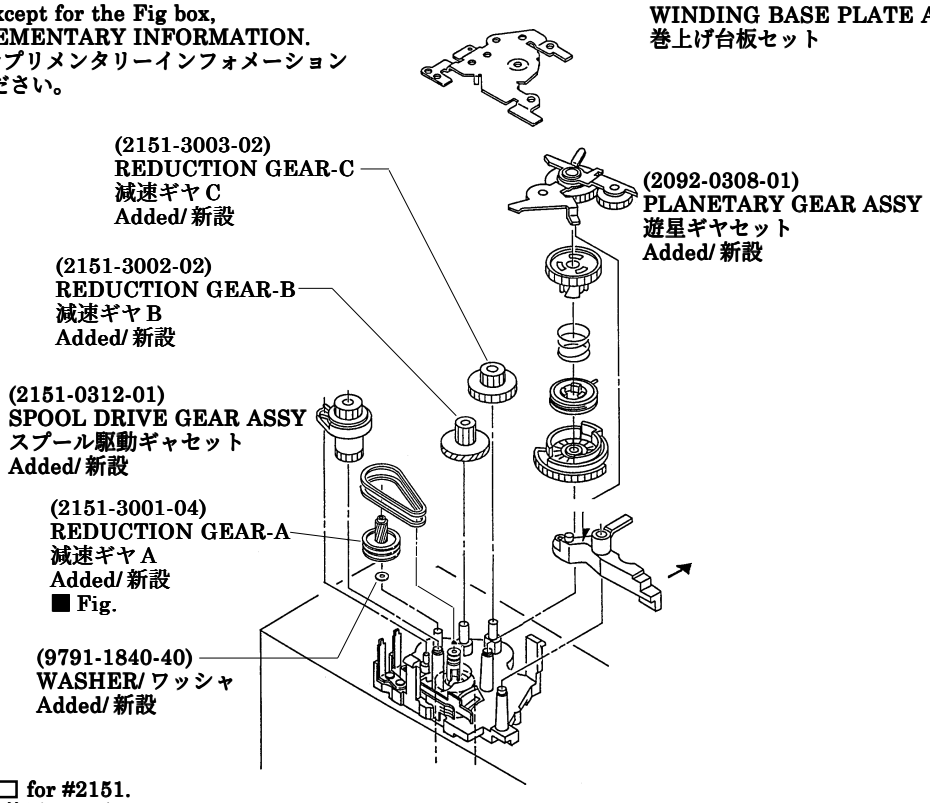

※ Use the parts marked ▭ for #2151.
※ #2151 では ▭ の部品を使用して下さい。

PLANETARY GEAR ASSY 遊星ギヤセット	SPOOL DRIVE GEAR ASSY スプールギヤセット	REDUCTION GEAR-A 減速ギヤA	REDUCTION GEAR-B 減速ギヤB	REDUCTION GEAR-C 減速ギヤC
2092-0308-01		2092-3001-03 色：青 Color:Blue	2092-3002-04 φ 2.3 色：赤 Color:Red 歯数：31 Number of teeth:31	
	2151-0312-01 歯数：14 Number of teeth:14	2151-3001-04 色：黒 Color:Black	2151-3002-02 φ 2.6 歯数：32 Number of teeth:32	2151-3003-02 色：黒 Color:Black 歯数：31 Number of teeth:31
2153-0308-01 穴 Hole	2153-0312-01 歯数：13 Number of teeth:13	2153-3001-01	2153-3002-01 φ 2.3 色：黒 Color:Black 歯数：25 Number of teeth:25	2153-3003-02 色：灰 Color:Gray 歯数：25 Number of teeth:25

管理No. REF No.	QS FA 2151-P028

PARTS MODIFICATION LIST

■No. 028 Parts List P. 4 仮-710

変更理由 REASON	サービス用部品として供給 Added as a service part			共通機種 COMMON MODEL	2151 Series	
Previous	2151-0408-01	−−	−−	2151-0408-01		New
Previous	−−−−−−−	−−	−−	(9373-4164-01)		New

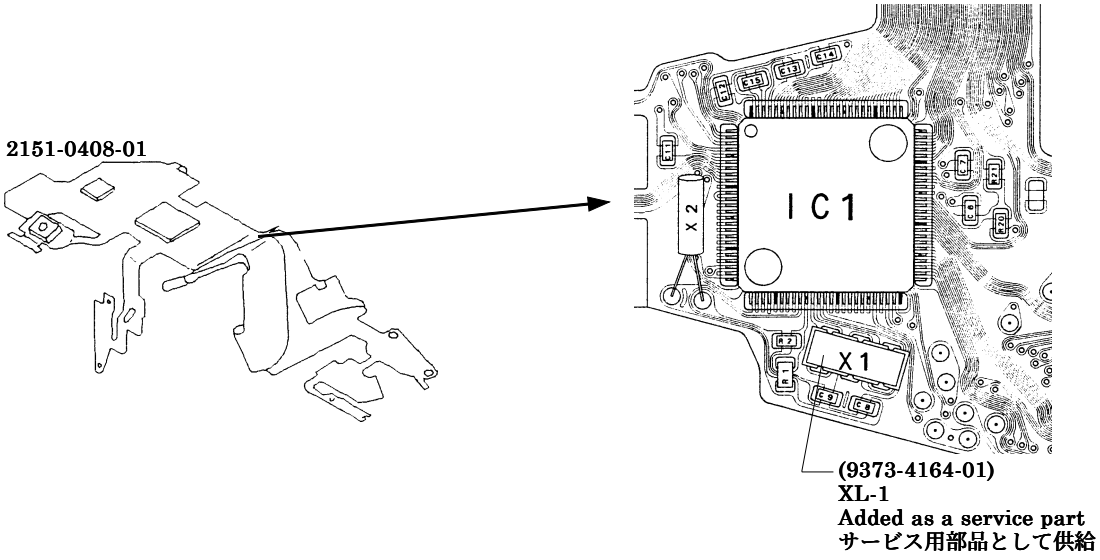

REF No. 管理No.	QS FA 2151-P029

PARTS MODIFICATION LIST

Division 主管部署	Camera Service Division カメラサービス部
Valid from 施行年月日	April 11. 2002

Approved by	Verified by	Written by
岩崎	岡本	作成

Parts List P. 4 SUPPLEMENTARY INFORMATION QS FA 2151-S01E/J 仮-780

REASON 変更理由	手配都合 For efficient part supply			COMMON MODEL 共通機種	2151 Series
Previous	2151-0581-01	→×	×←	2154-0580-01	New
Previous	2092-5013-03	→×	×←	2153-5013-01	New
Previous	————	——	——	9391-0807-□□	New
Previous	————	——	——	9394-2290-90	New

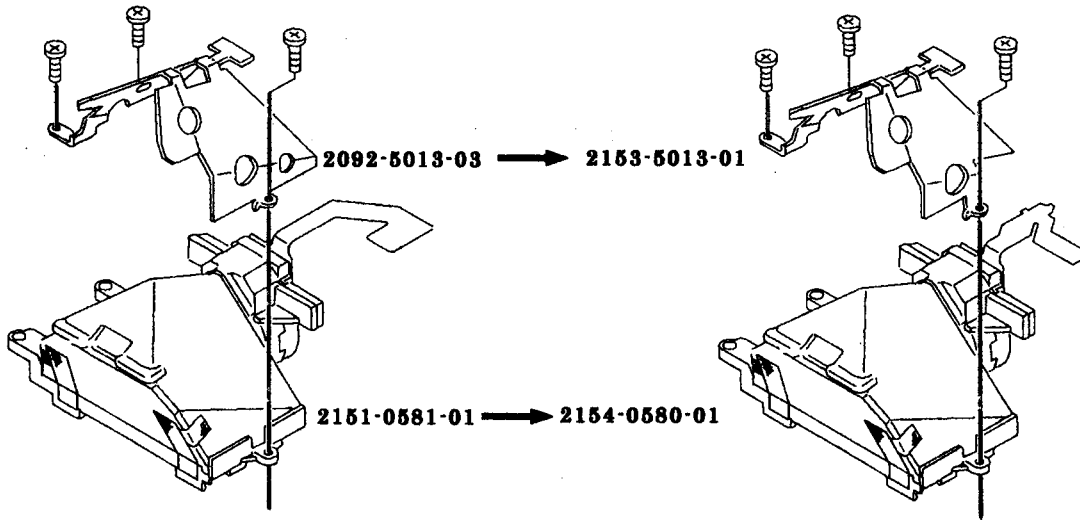

When replacing #2151 Penta Prism Assy (#2151-0581) with #2154 Penta Prism Assy (#2154-0580-01), remodel FPC-SPC Assy of #2154 Penta Prism Assy for FPC-SPC Assy of #2151 referring to SERVICE MANUAL SUPPLEMENTARY INFORMATION QS FA 2151-S01E.
2151と2154のペンタブロックセットではフレキが異なります、サプリメンタリーインフォメーションQS FA 2151-S01E/Jを参照し、素子を取外しジャンプ線および絶縁で対応して下さい。

Interchangeability as a set/セットでの互換性	Previous	→○	○←	New

PML

■本案内状に従い、パーツリストへの転記等、メンテナンスを行なってください。
According to this list, correct "Parts List" in Service Manual for effective parts management.

MINOLTA CO.,LTD.

Repair Guide

■Contents of this msnual are in accordance with the assembly procedure.
Therefore, follow the reverse procedure when disassembly.
■Refer to Wiring diagram on Parts List, page 9 for wiring.

■Symbols
■Cautions and keypoints
[G] : Grease
[B] : Adhesive
[T] : Tool

CONTENTS

Page
■Precautions 2–3
[1]Body Assembly 4–5
[2]Winding Base Assy Installation 6
[3]Mirror Box Assembly– I 7
■SREL timing adjustment 7
[4]Mirror Box Assembly– II 8–9
[5]Penta Prism Assy, FPC–A Assy Installation 10–11
[6]Mirror Box Assy Installation 12–13
■Lead wire arrangement 14
■Mechanical operation check 14
[7]External Parts Installation 15
■Top Cover Assy Assembly 16–17
■Back Cover Assy Assembly 18
■Adjustment/check required after repair 19
■Preparation Before Adjustment–1 20
■Body Back Adjustment– I 21
■Body Back Adjustment– II 22
■Viewfinder Back Adjustment 23
■Manual SS & X–Sync. Time–Lag Check 24
■AE Level Check 25
■Aperture Control Check 25
■Flash Level Check 26
■Manual Set SS Adjustment 27
■Aperture Preset Adjustment 28
■AE Adjustment 29
■Flash Level Adjustment 30
■Pre–Flash Level Adjustment 31
■Wireless Flash Level Adjustment 32
■B.C. Lock Voltage Adjustment 33
■LCD Displays Check 34
■Preparation Before Adjustment–2 (AF adjustment) 35
①AF Area Adjustment 36
②Pitch, Yaw Adjustment 37
③EZ Adjustment 38
■Error Code on HIT Controller 39
■Tools & Instruments 40
■Subsidiary materials 40

■ Precautions

■To discharge

- Before disassembly, be sure to discharge main condenser as in Fig. 1.

■Fig. 1

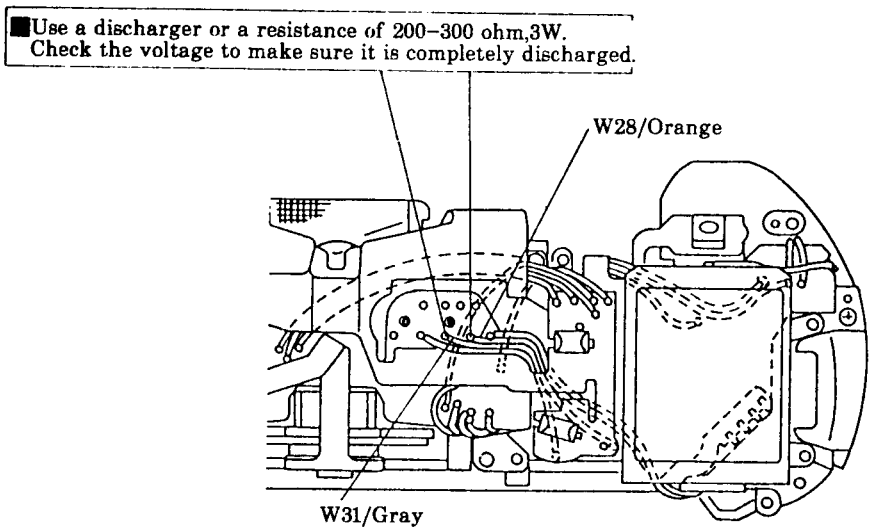

■To activate without Top Cover

- Solder indicated part–a on FPC–A Assy to short circuit.
- Replacement FPC–A Assy is initially short circuitted at the part–b.

  So when using the replacement FPC–A Assy, you don't need to short circuit the part–a.

※Be sure to unsolder the part–a, or to cut the part–b before installing Top Cover.

■Fig. 2

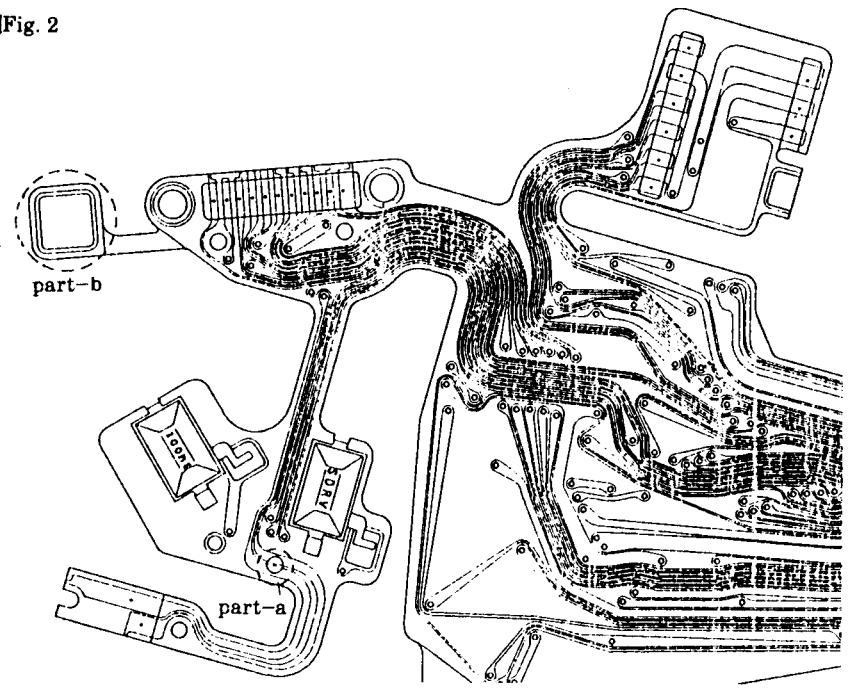

■Initial setting of FPC–A Assy is as follows.

- AF not available (remains in MF)
- No flash charge
- Shutter–release available without lens and with film

※These settings will be automatically cancelled after Flash Level Adjustment (P. 30).

■Precautions

■Chemicals

Handle chemicals of high volatility with care, use of which will affect to your health and the environment.

1. **Store them sealed in a specific place to prevent from exposure to a high temperature or direct sunlight.**
2. **Avoid dividing them into small containers and prevent from vaporization.**
3. **Keep containers sealed when not in use.**
4. **Avoid using them as much as possible. When required, remove only required amount from the container to make full use.**

■Plastic parts

1. **When cleaning the plastic parts, use cleaning paper or cloth.** Never use thinner, ketone, ether.
2. When installing the plastic parts, insert the specific screws vertically to the parts. (Be careful not to tighten too much.)

■PCBs

Since PCBs use MOS IC, you must reduce a static electricity. When repairing a PCB itself, or when wiring, please perform your work as illustrated above.
When grounding is impossible, connect the cable to a steel desk or shelf.

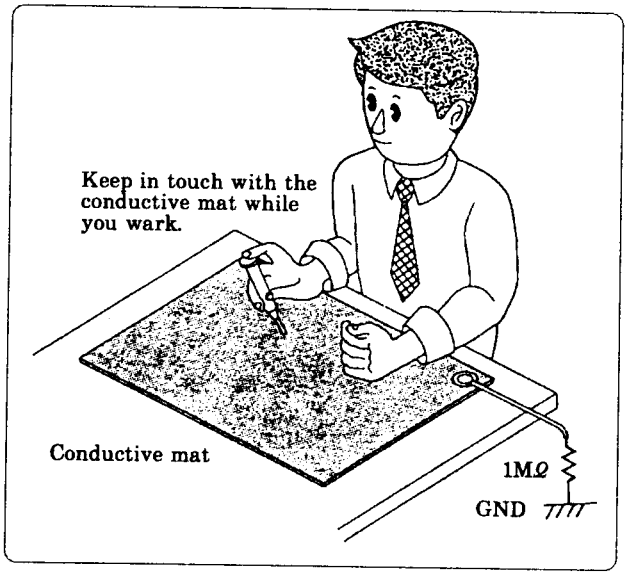

1 Body Assembly

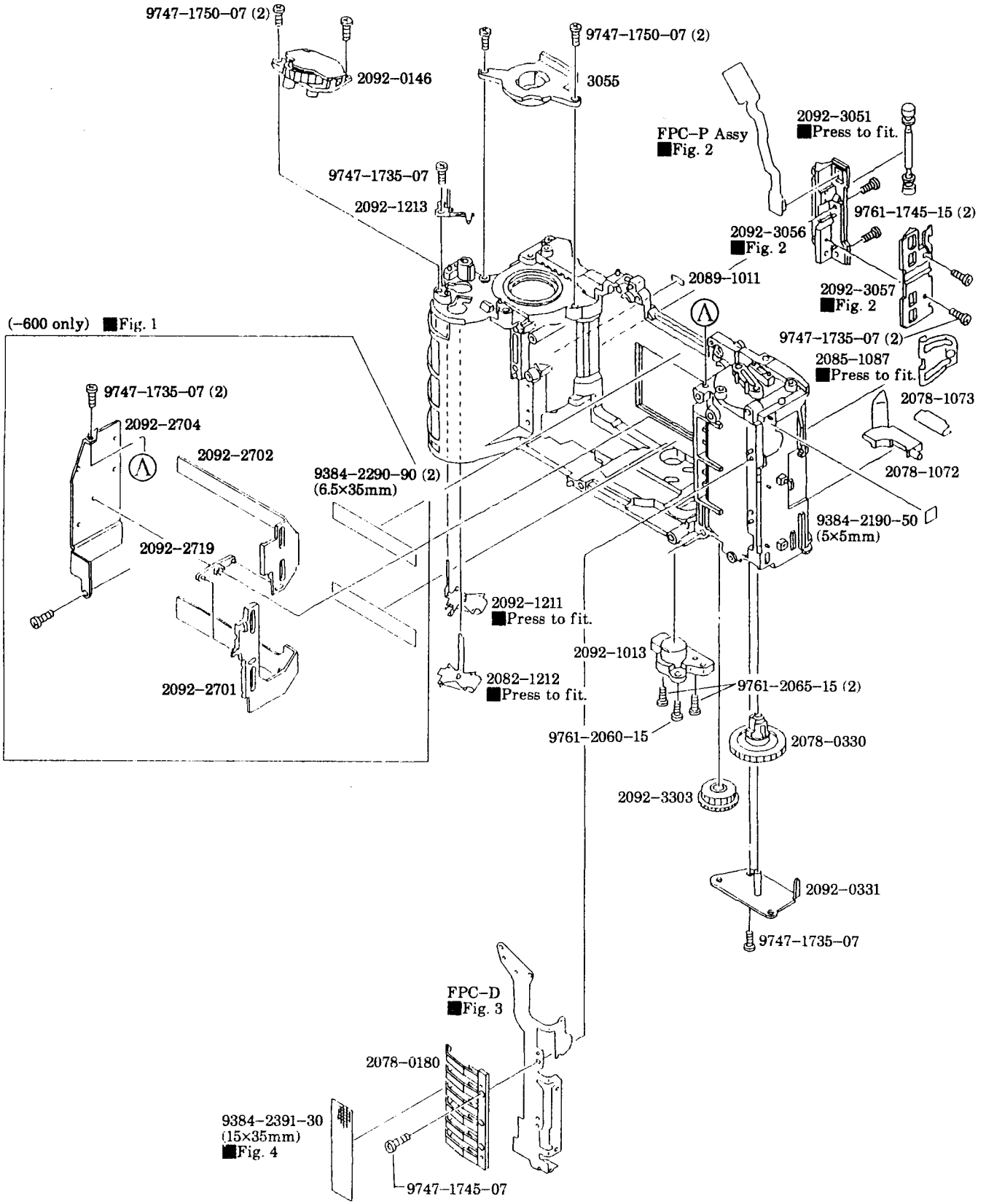

■Fig. 1 (-600 only)

• Fit 2092-2701, 2092-2702, 2092-2719 to posts on body.

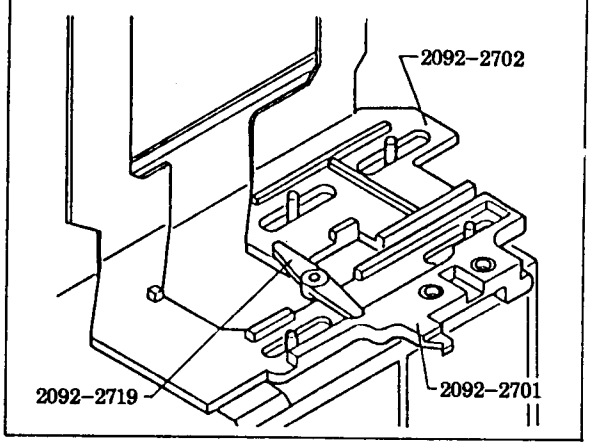

■Fig. 2

• Fit FPC-P Set to 2092-3056. While holding part ⓐ with part ⓑ, assemble 2092-3056 and 2092-3057 by fitting posts.

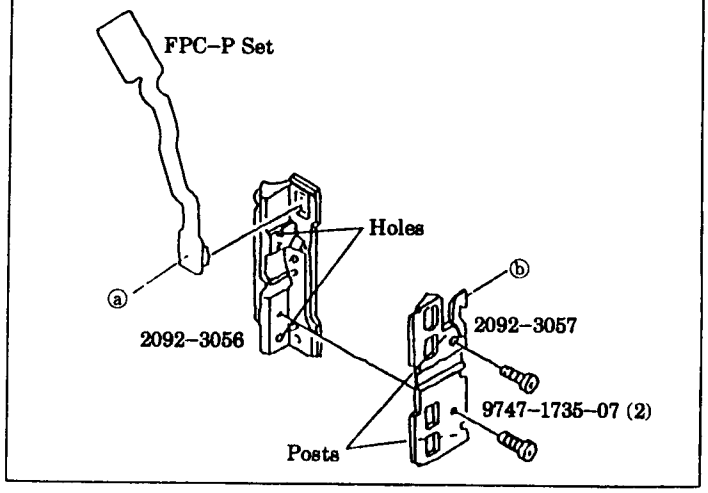

■Fig. 3

• Fit holes of FPC-D to posts on body to install.

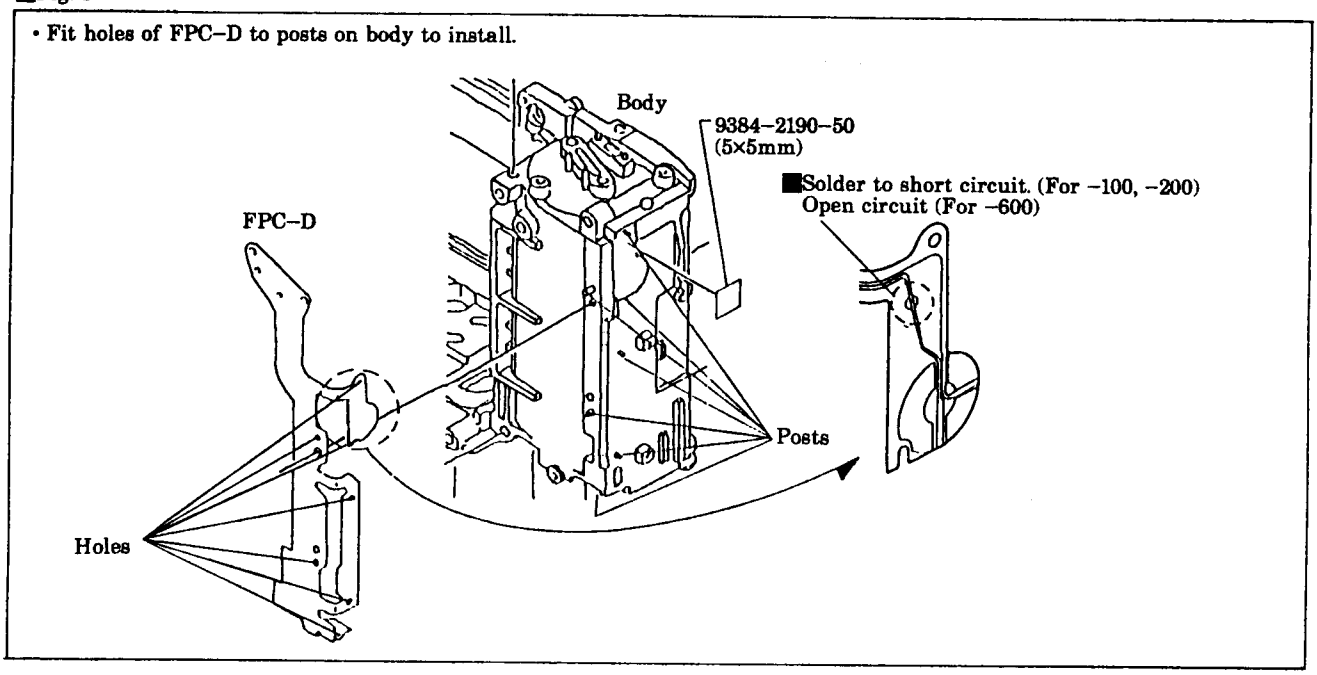

■Fig. 4

• Affix 9384-2391-30 to shaded area.

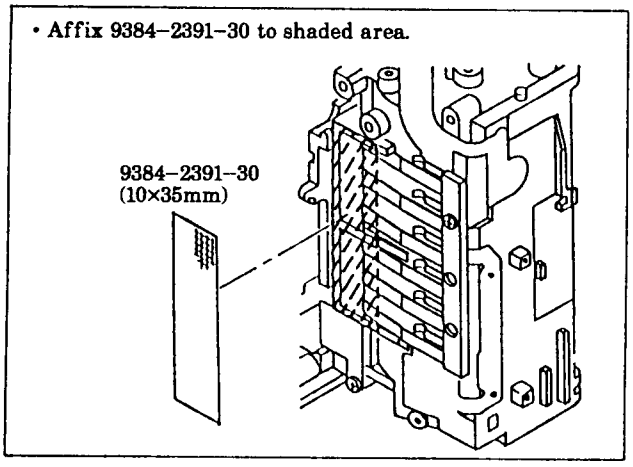

2 Winding Base Assy Installation

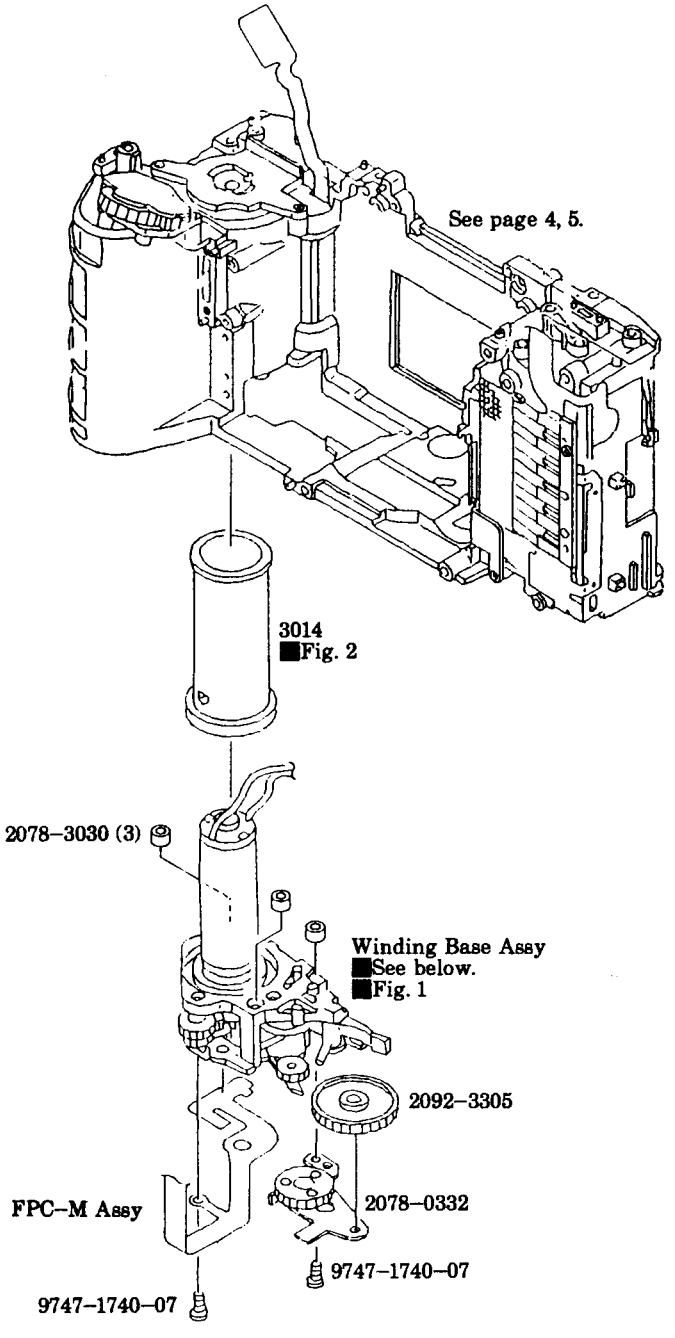

■Fig. 1

• Wire arrangement

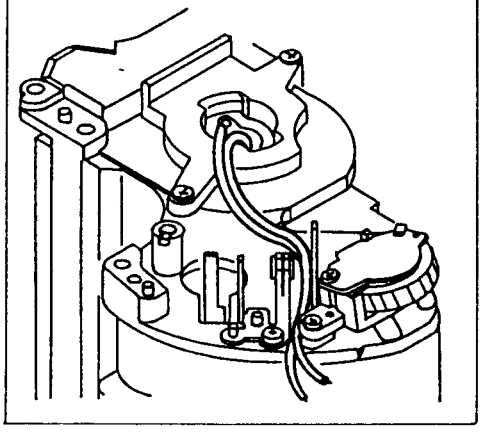

■Fig. 2

• Apply G–75 to shaded area.

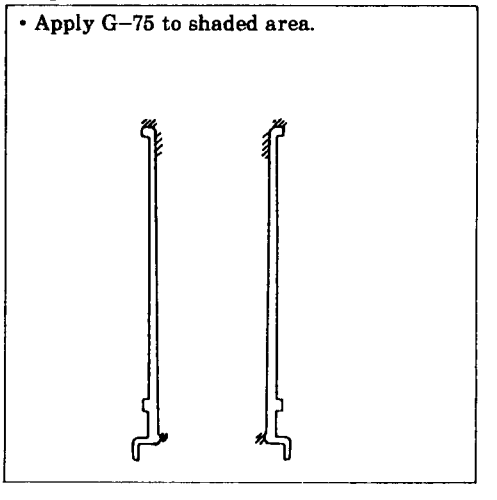

■How to install

1. Set Cam Gear to the indicated position so that Mirror Charge Lever is set to the position of arrow. (Fully engaged)
2. Install Winding Base Assy to the body.

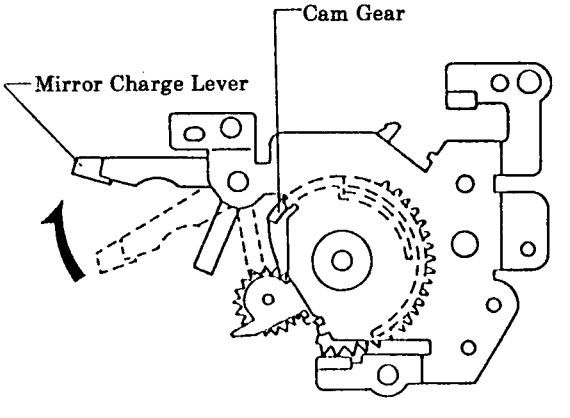

3 Mirror Box Assembly — I

■Install in the order of ① to ④.

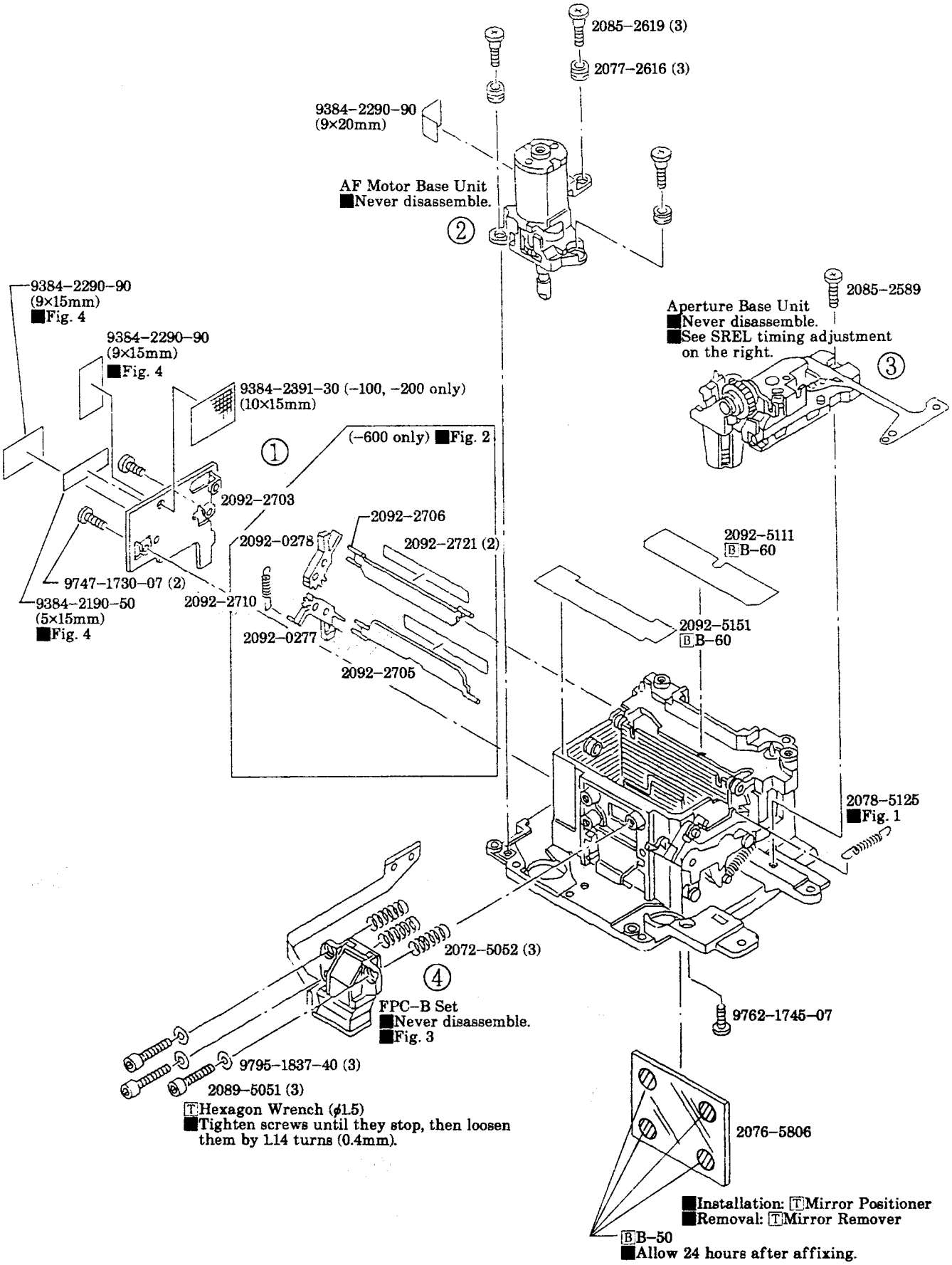

■Fig. 1

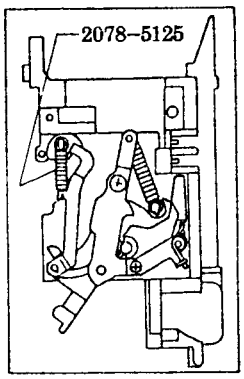

■Fig. 2

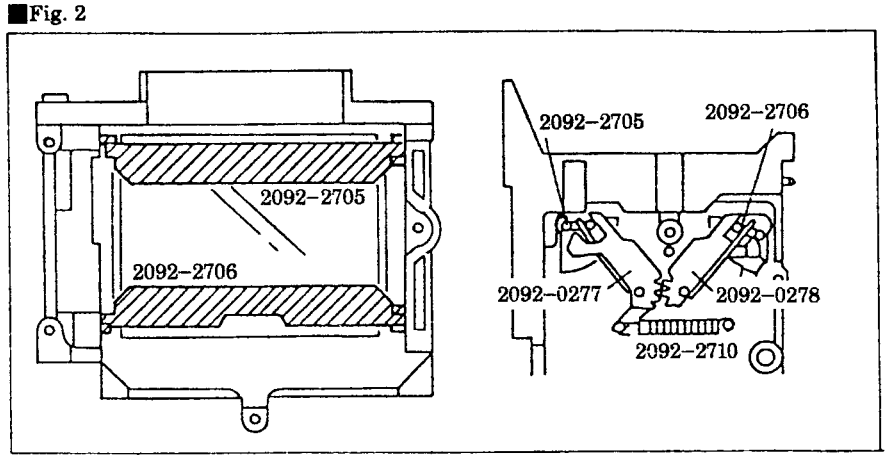

■Fig. 3

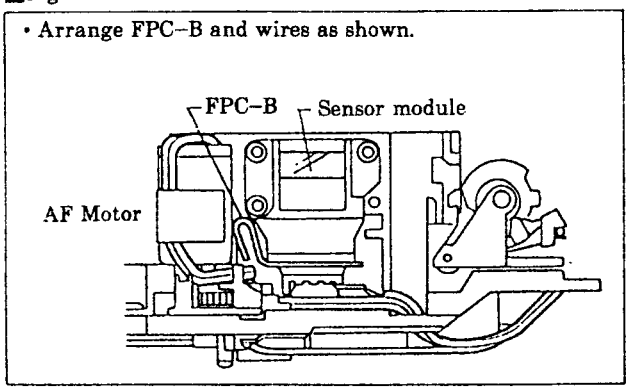

■Fig. 4

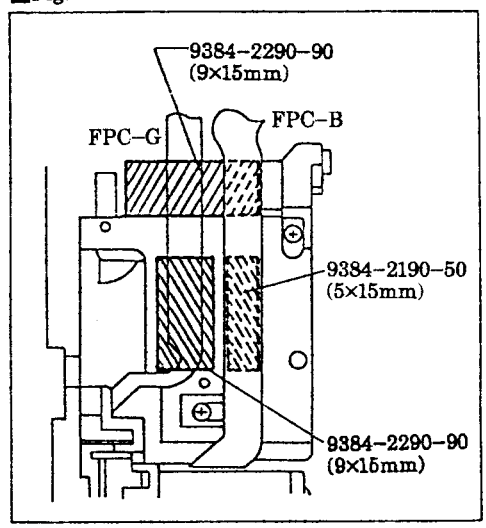

■SREL timing adjustment

■Equipments required

Circuit Tester

■Procedure

1. Connect Circuit Tester as shown.
2. Turn Bevel Gear–A in the direction of arrow until it stops.
3. By pushing Open Stop Lever slowly, check that the SREL (Release Sw.) is turned on before the Open Stop Lever is released from the Bevel Gear–A.
4. If not, bend part–ⓐ to adjust the SREL timing.

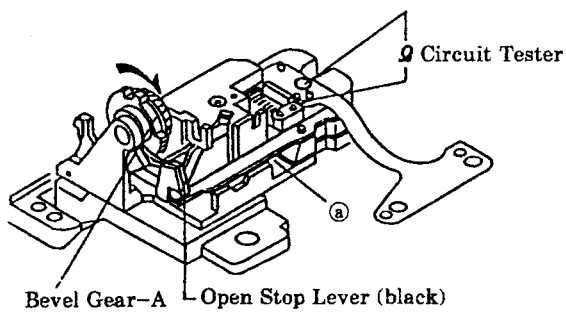

4 Mirror Box Assembly– II

■Install in the order of ① to ⑨.

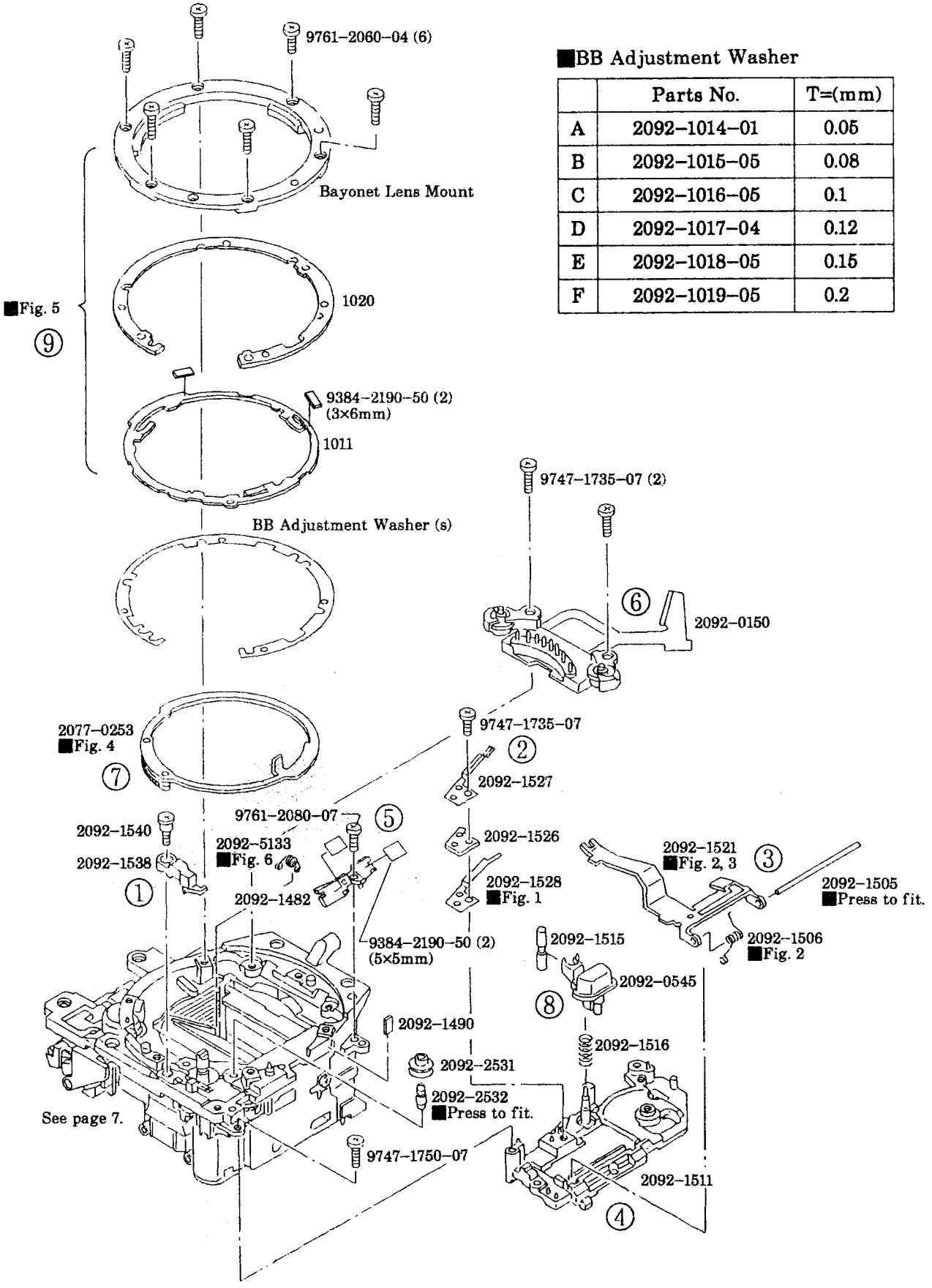

■BB Adjustment Washer

	Parts No.	T=(mm)
A	2092–1014–01	0.05
B	2092–1015–05	0.08
C	2092–1016–05	0.1
D	2092–1017–04	0.12
E	2092–1018–05	0.15
F	2092–1019–05	0.2

■Fig. 1

• Hook tip of 2092–1528 to AF/M Contact Base Plate as shown.

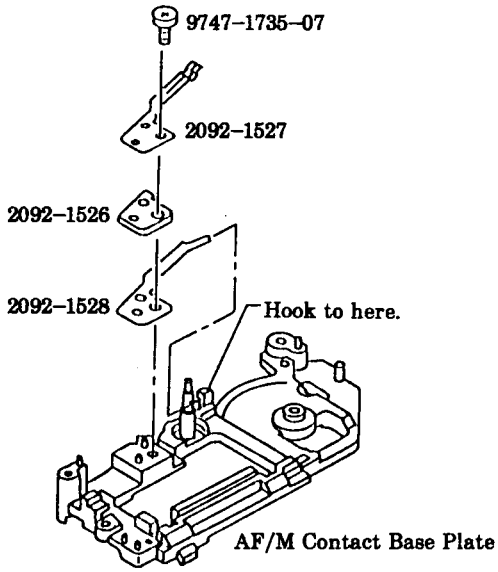

■Fig. 2

• Thread 2092–1505 as shown, and insert tip of 2092–1506 to the hole of 2092–1521. Then press the 2092–1505 to fit to the groove of AF/M Contact Base Plate.

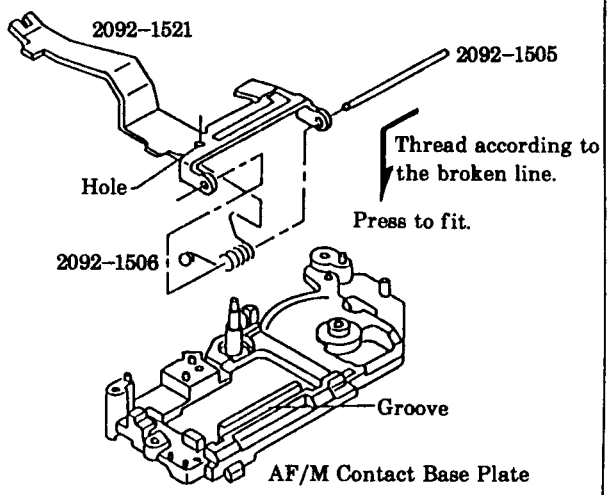

■Fig. 3

• Fit tip notch of 2092–1521 to groove of AF Coupler.

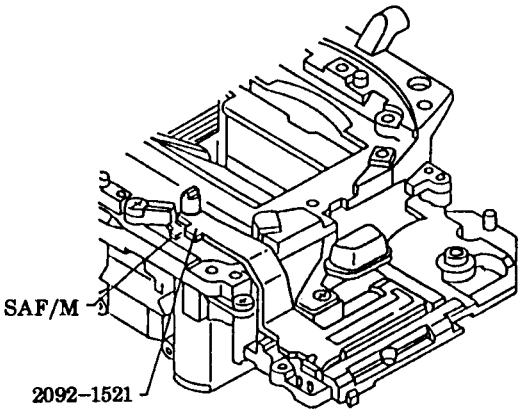

■Fig. 4

①Set Aperture Base Plate Unit to aperture stopped down position.
②Insert Aperture Ring Set aligning the punch mark with the hole of Aperture Base Plate Unit.

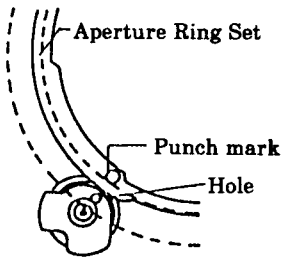

■Fig. 5

①Install 1020 to Bayonet Mount as shown.
②Stick two pieces of double faced tape to affix 1011.

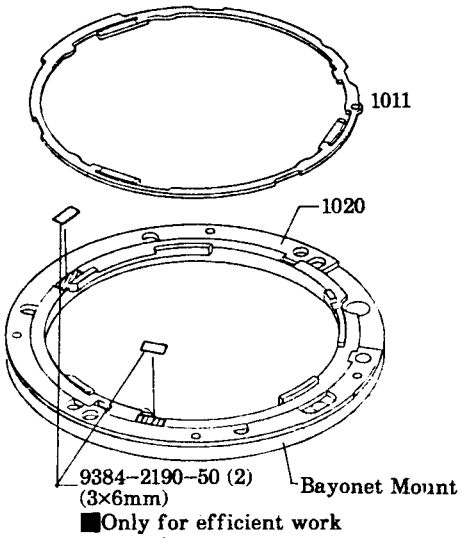

■Only for efficient work
(not always necessary)

■Fig. 6

• Install 2092–5133 as shown.

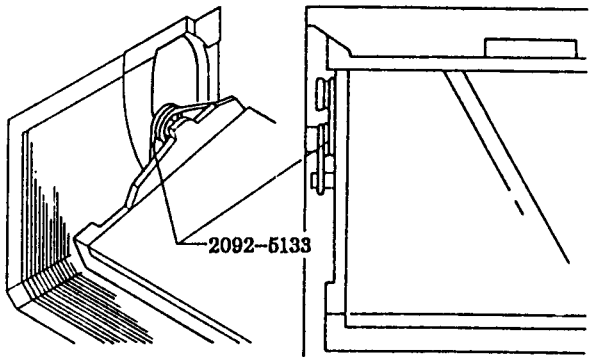

5 Penta Prism Assy, FPC–A Assy Installation

■Install in the order of ① to ⑤.

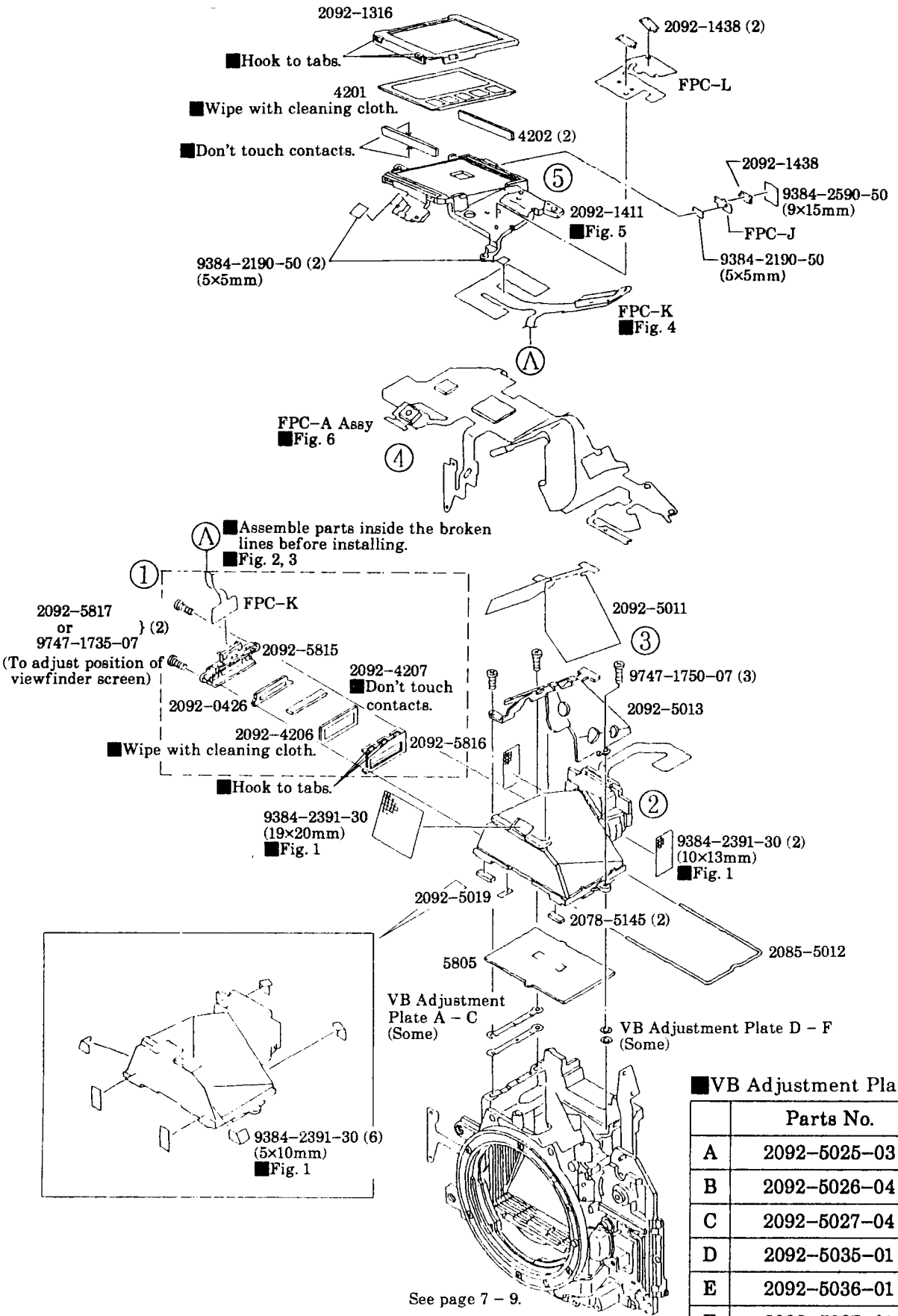

■VB Adjustment Plate

	Parts No.	T=(mm)
A	2092–5025–03	0.2
B	2092–5026–04	0.15
C	2092–5027–04	0.1
D	2092–5035–01	0.2
E	2092–5036–01	0.15
F	2092–5037–01	0.1

■Fig. 1

• Affix 9 pieces of Acetate Tape to shaded areas.

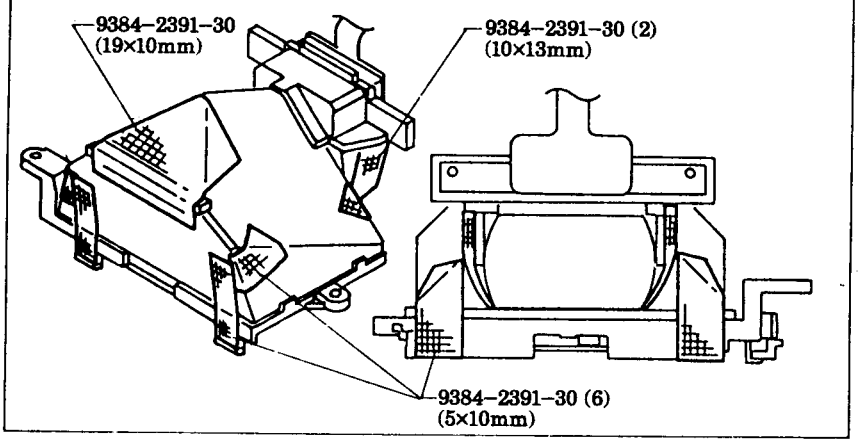

■Fig. 2

• Fold FPC-K as shown.

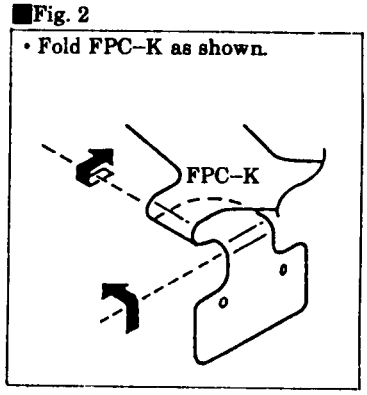

■Fig. 3

• Install FPC-K to 2092-5815 by fitting its tip to groove, holes to posts.

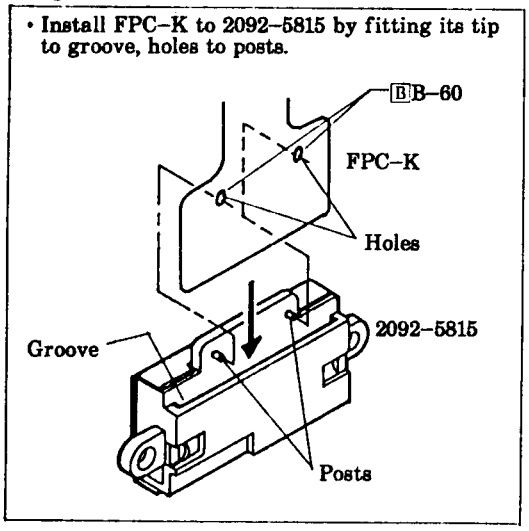

■Fig. 4

• Fit holes of FPC-K to pin on FPC-A, then fold the FPC-K as shown.

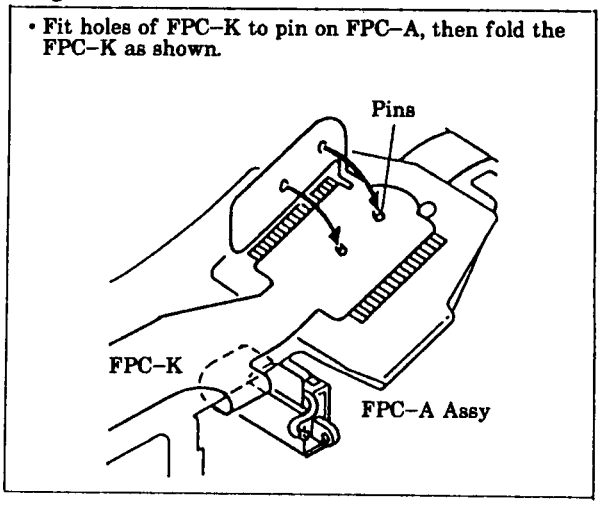

■Fig. 5

• Install FPC-K to Shutter-Release Base by fitting to grooves and posts.

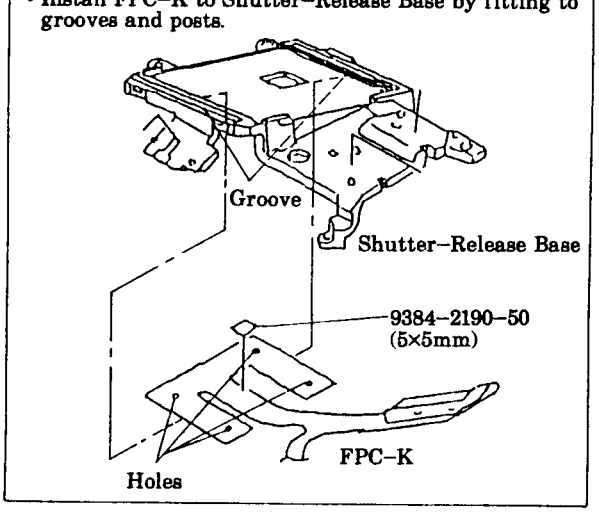

■Fig. 6

• Fit the indicated part of FPC-A Assy to the posts of Shutter-Release Base

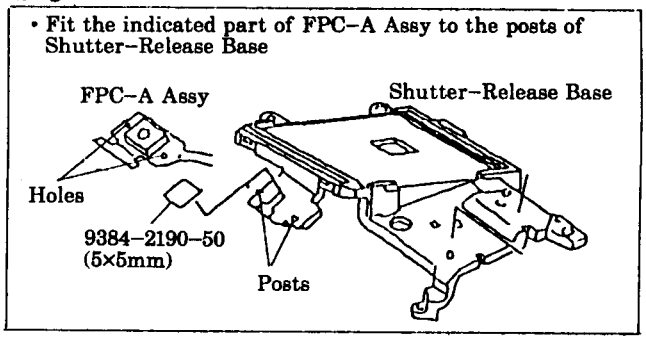

6 Mirror Box Assy Installation

■See Lead wire arrangement (P. 14) for wiring.
■After installation, check mechanical operation (P. 14).

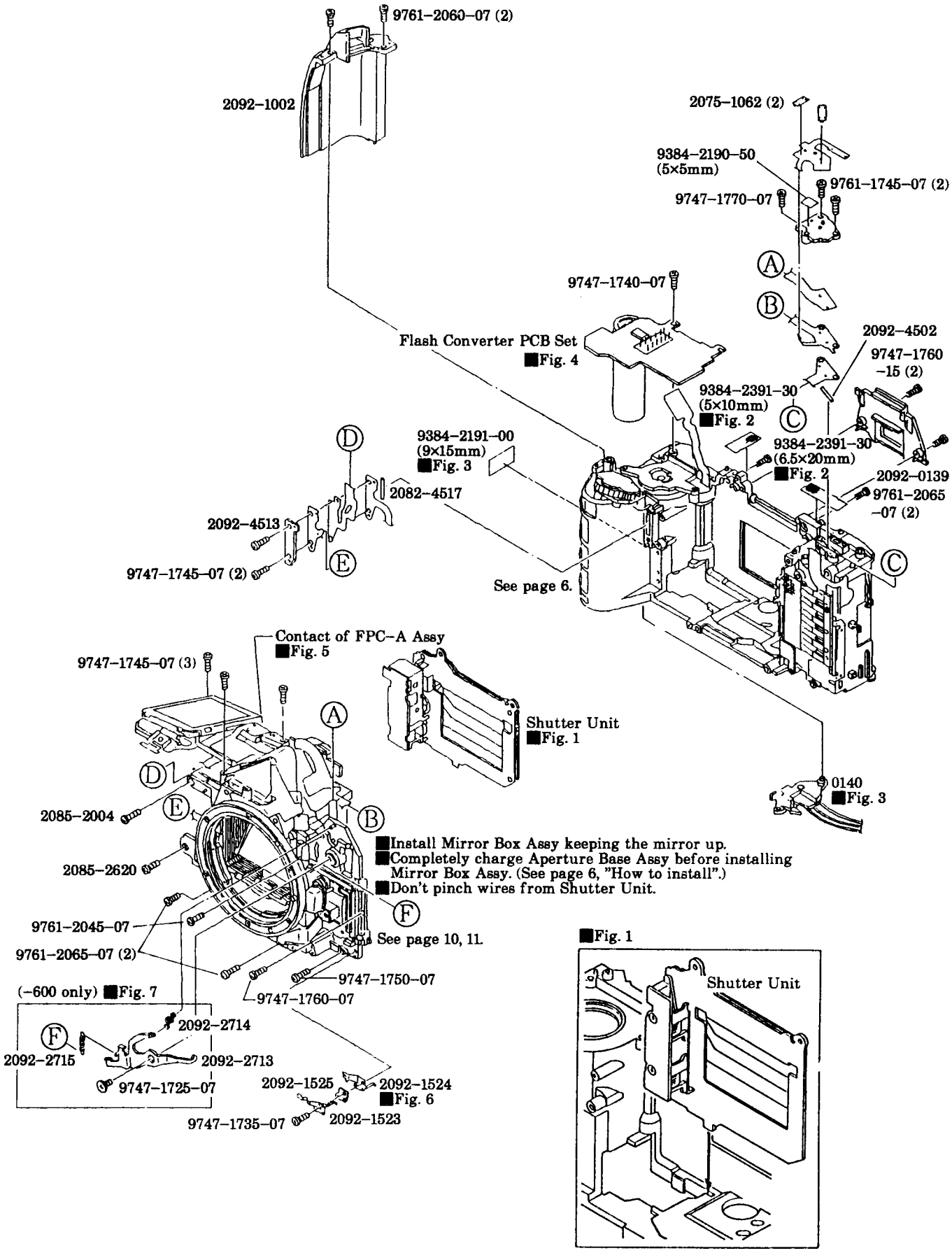

■Fig. 2

• 9384–2391–30 Installation

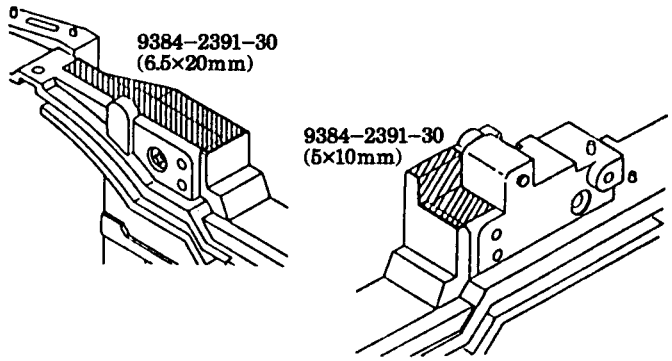

■Fig. 3

• Fit posts of 0140 to holes on body.

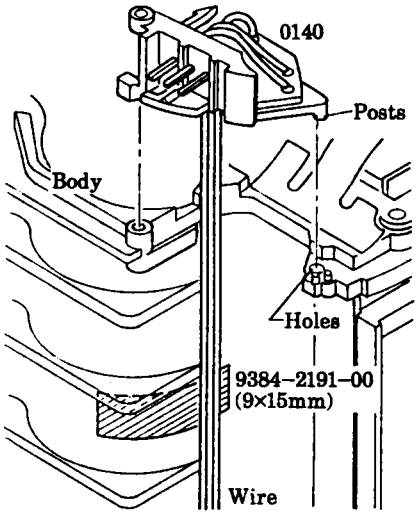

■Fig. 4

• Wire arrangement

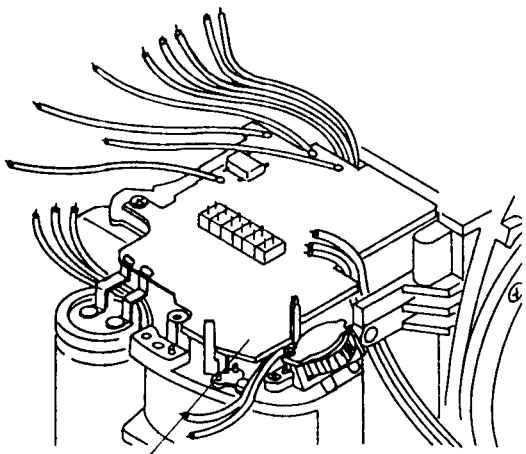

■Fig. 5

• Insert the contact of FPC–A Assy to the slit.

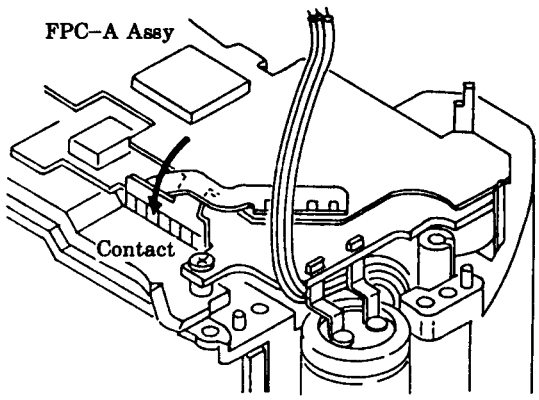

■Fig. 6

• Hook the part ⓐ of 2092–1524 to AF/M Contact Base as shown.

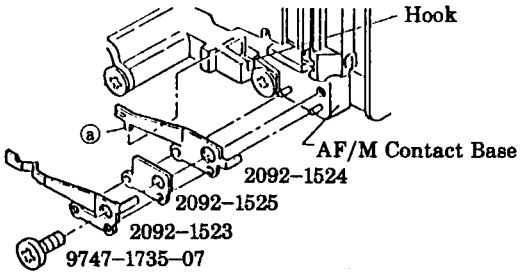

■Fig. 7

• While pushing and holding Panorama Frame Plate–A in arrowed direction, hook 2092–2715 to the Panorama Frame Plate–A and to 2092–2713 as shown.
• Hook 2092–2714 to 2092–2713 and to post of AF/M Contact Base.

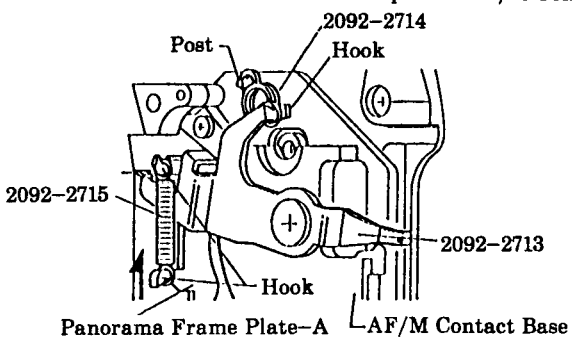

■Lead wire arrangement

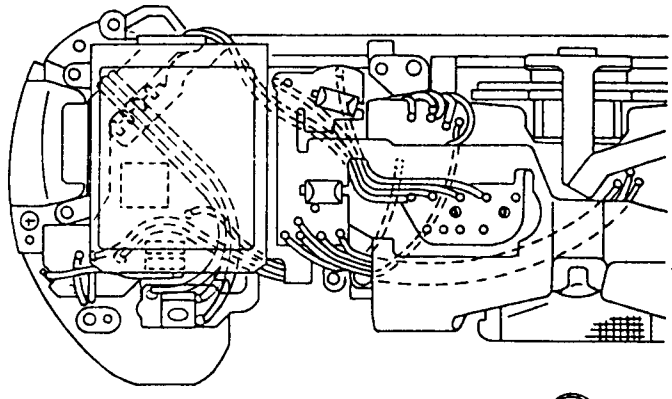

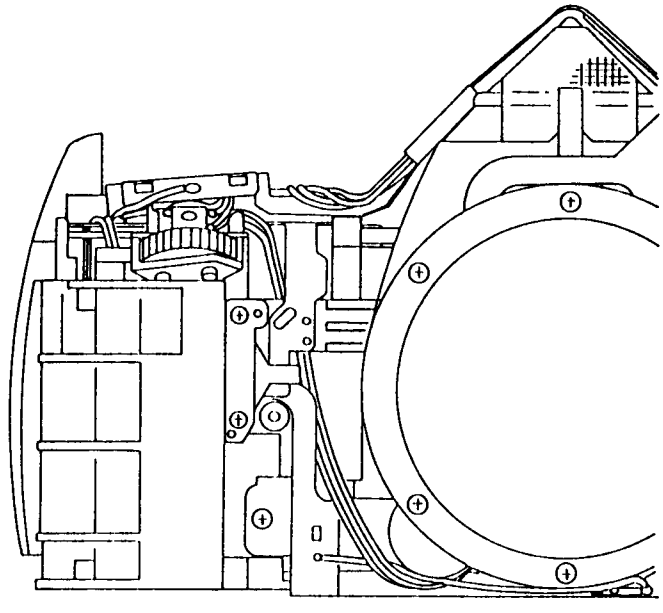

■Mechanical operation check

1. Insert Motor Axis Spanner to hole ⓓ of Winding Base Assy from the bottom of the body, then turn the motor manually in both directions.
   - Reverse drive (counterclockwise): Shutter is released then charged.
   - Normal drive (clockwise): Spool rotates.
2. If Aperture Ring Set doesn't operate smoothly, adjust Screw (9762–1745–07) for smooth operation.

■Fig. 1

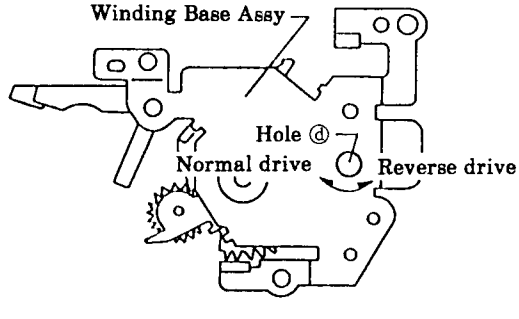

■Fig. 2

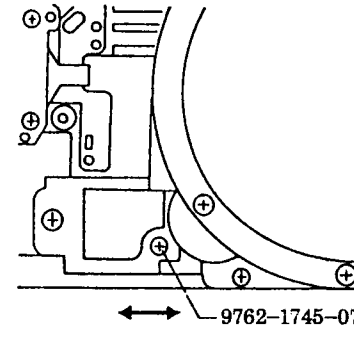

7 External Parts Installation

- Install in the order of ①~to ⑧.
- Discharge the main condenser before disassembly referring to page 2.
- Before installing Top Cover, be sure to unsolder main Sw. pattern or cut the pattern in FPC-A referring to page 2.

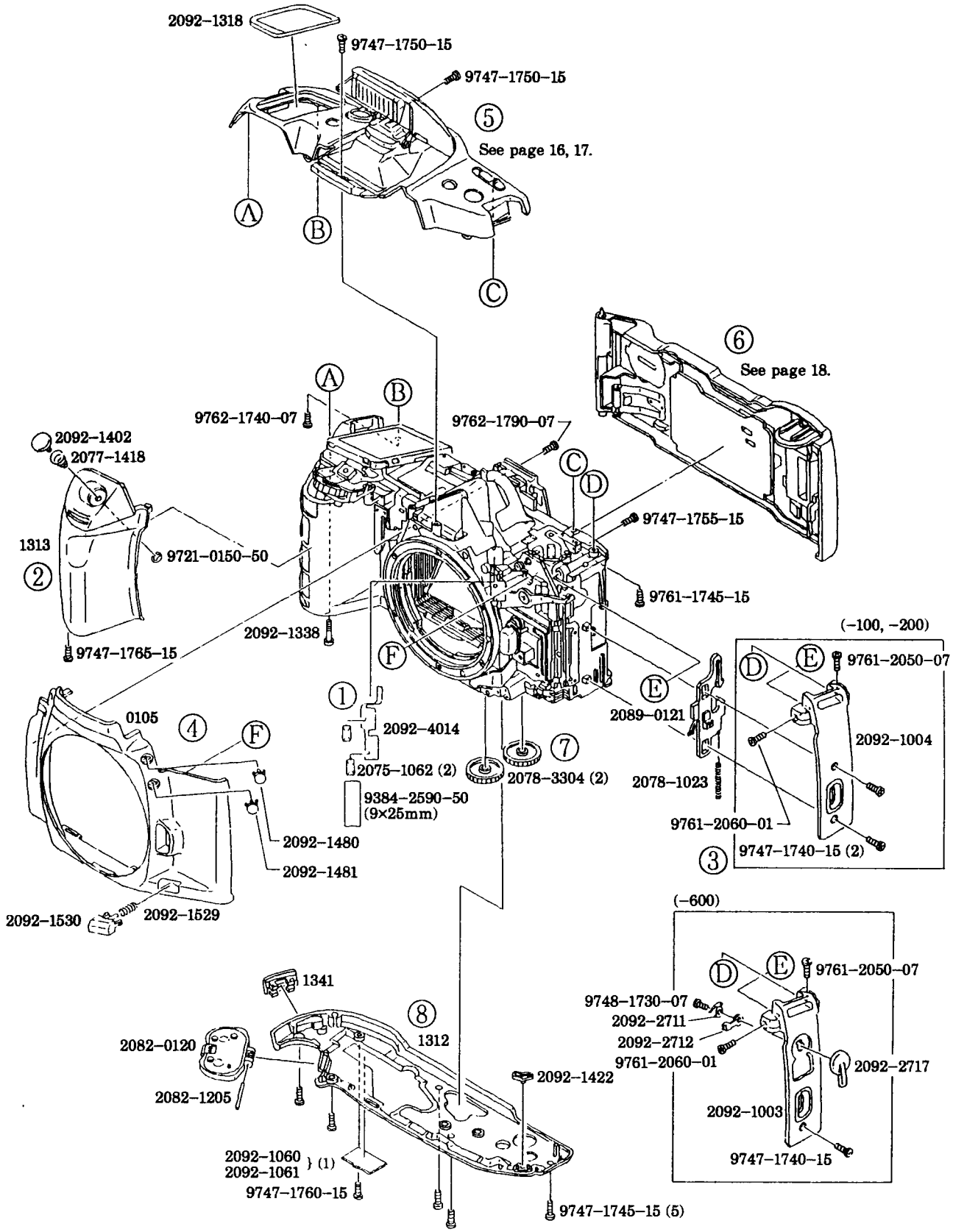

■Top Cover Assy Assembly

■Arrange wires according to Fig. 3 and 6.

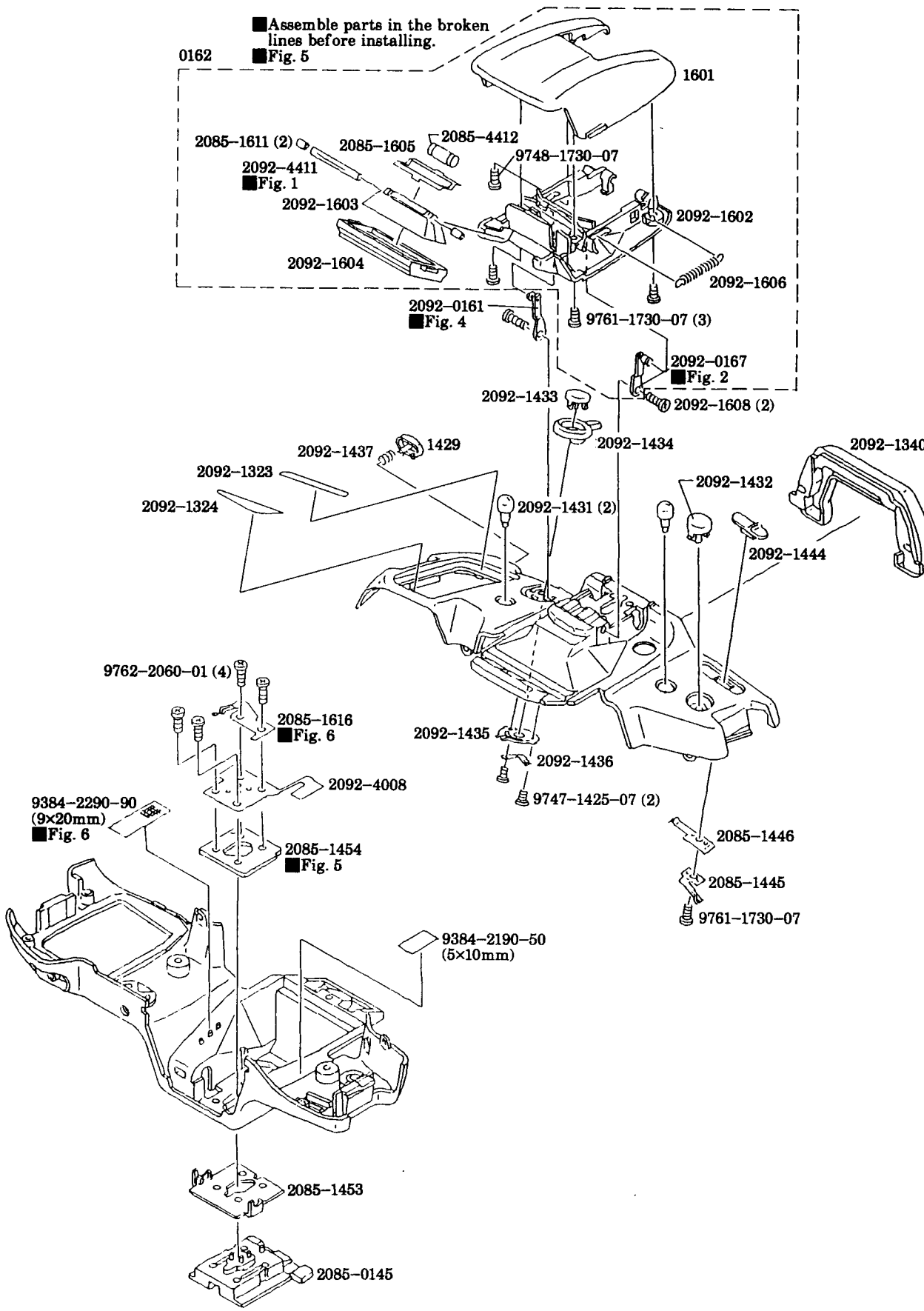

■Fig. 1

• Assemble 2092–1603 and 2085–1605, then insert XE tube.

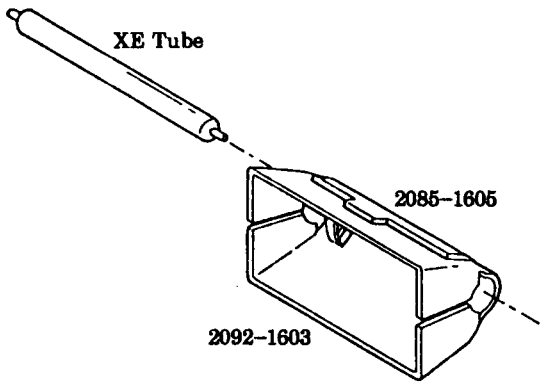

■Fig. 2

①Insert tip of 2092–0167 through the part ⓡ of 2092–1602.
②Hook one end of 2092–1606 to 2092–0167, the other to tab of 2092–1602.

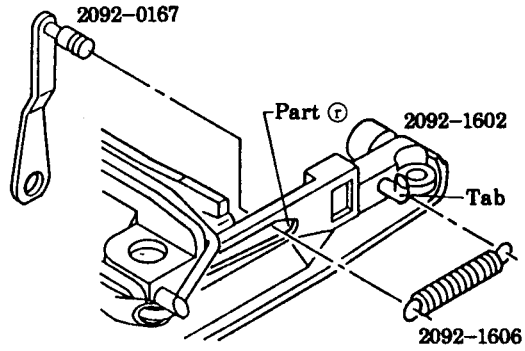

■Fig. 3

• Wire arrangement

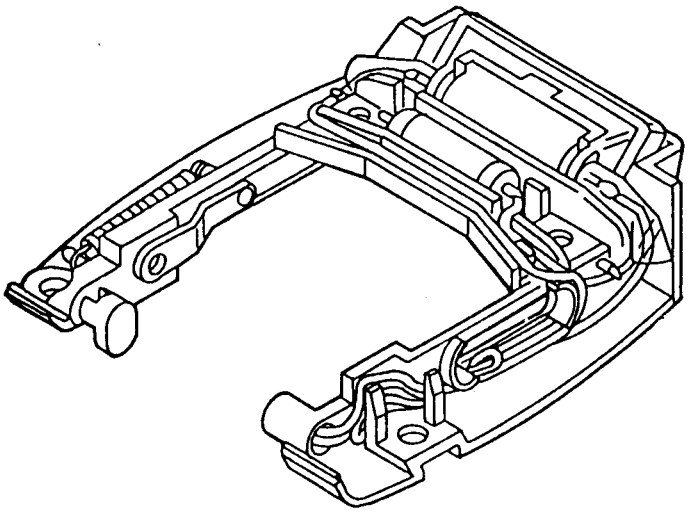

■Fig. 4

• Insert 2092–0161 to part ⓡ of 2092–1602.

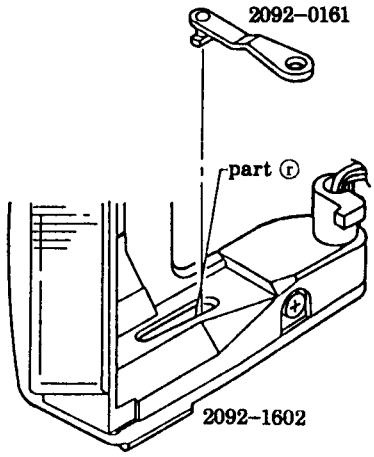

■Fig. 5

• Install Flash Assy with down position, then slide Shoe Setting Plate in the arrowed direction to install.

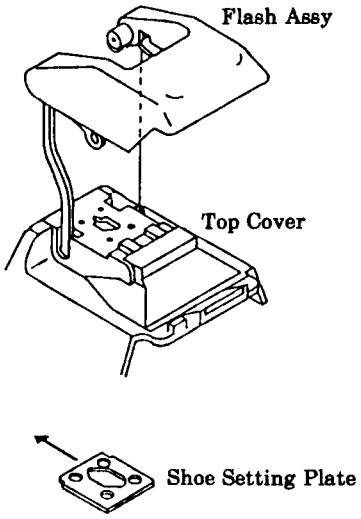

■Fig. 6

• Wire arrangement
• 2085–1616 should make contact with FPC–H when the flash is up.

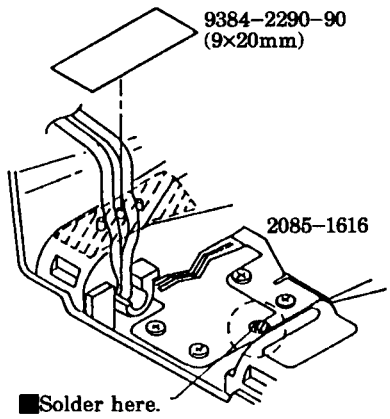

■Back Cover Assy Assembly

NON DATE MODEL (–100)

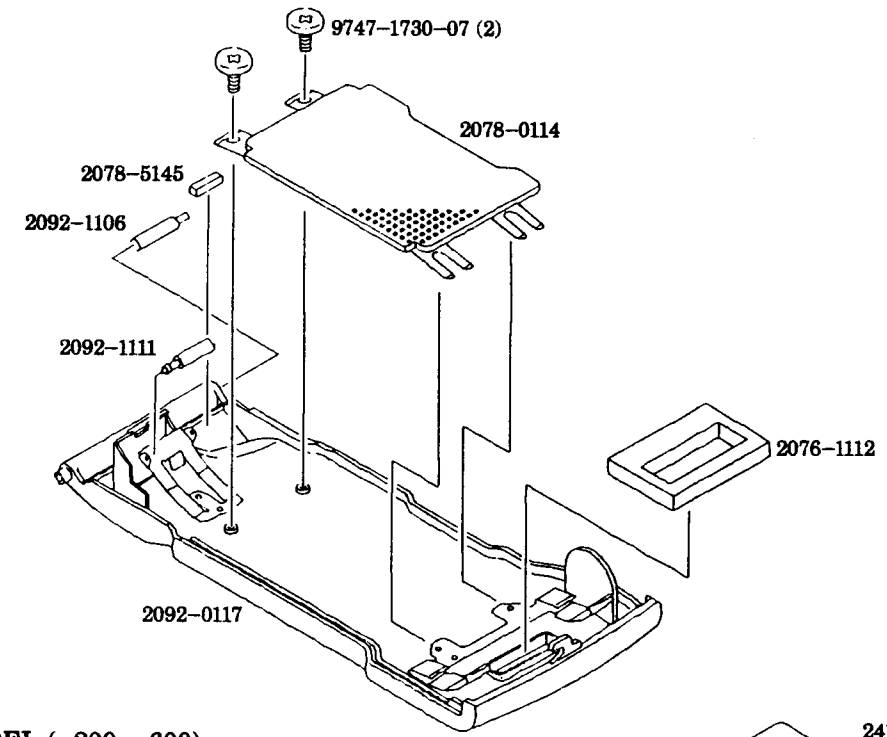

DATE MODEL (–200, –600)

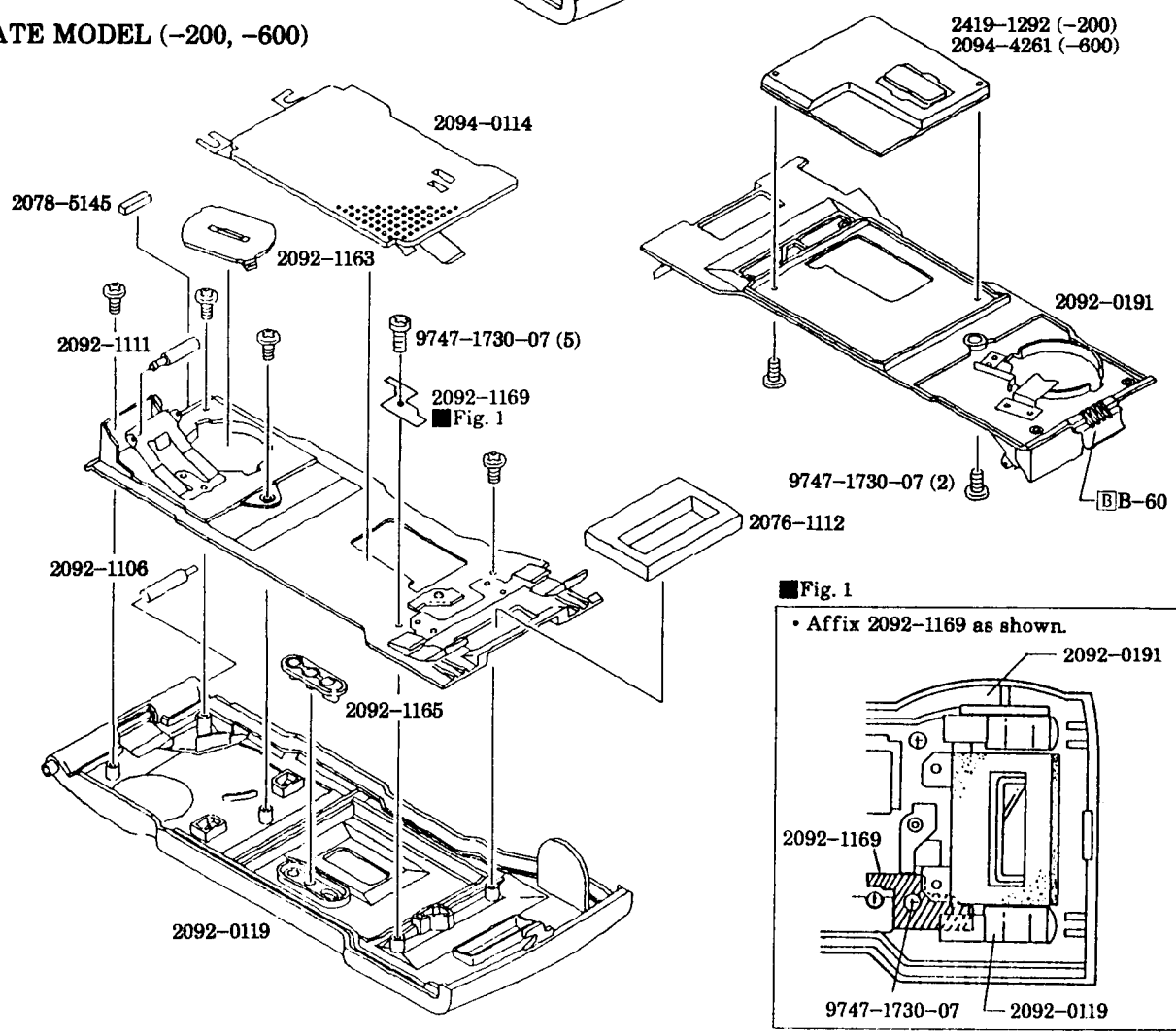

QS FA 2151-S01E Feb. 2002

SERVICE MANUAL SUPPLEMENTARY INFORMATION

CODE NO.	2151 series
MODEL	DYNAX 500si SUPER MAXXUM 500si ALPHA 303si SUPER

■ Conversion Procedure of Penta Prism Assy

#2151 Penta Prism Assy (2151-0581-01) is no longer available.
Apply information below for conversion procedure to substitute #2092 Penta Prism Assy (2092-0580-01), #2153 Penta Prism Assy (2153-0580-01) or #2154 Penta Prism Assy (2154-0580-01) for #2151 Penta Prism Assy.
When replacing the part with #2092, #2153 or #2154 Penta Prism Assy, use the components referring to the following compatibility.
The Penta Prism Assy can be disassembled and assembled easily referring the parts list in the respective Service Manual. The adhesive was applied to fix the FPC-SPC Assy.

■ Components Interchangeability (between #2151 Penta Prism Assy and the substitute)

Substitute	Penta Prism	FPC-SPC Assy	Penta Holder		Viewfinder LCD Subassembly		
					LCD2 2151-4206-01	FPC-K 2092-4011-01	Other parts
2092-0580-01	X	*1	O	X	X 2092-4206-01	O	O
2153-0580-01 2154-0580-01	O	*2	*3	X	X 2153-4206-01	X (FPC-I) 2153-4009-01	O

O: Interchangeable, X: Not Interchangeable, *1,2,3: Conditionally interchangeable

*1: When using the FPC-SPC Assy of #2092 Penta Prism Assy, be sure to perform the SPC Position Adjustment.
*2: When using the FPC-SPC Assy of #2153 or #2154 Penta Prism Assy, remodel it for the FPC-SPC Assy of #2151 referring to the FPC-SPC Remodeling Technique (pg. 3)
*3: When using the Penta Holder of #2153 or #2154 Penta Prism Assy, use the Penta Pressure (2153-5013) together.

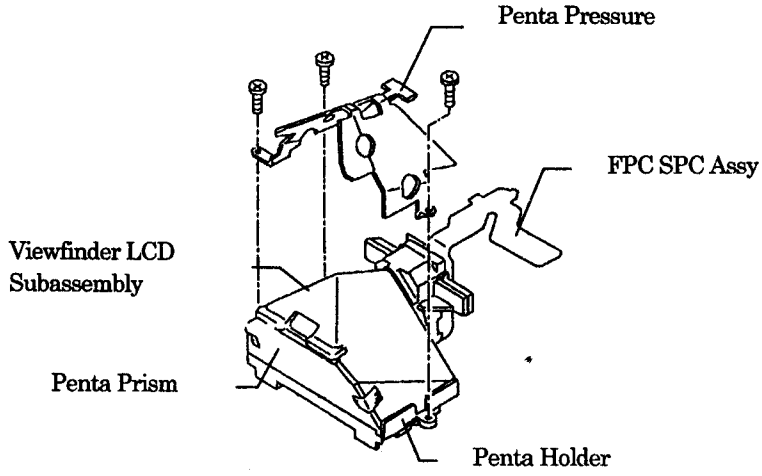

Penta Prism Assy

This information should be filed in your service manual.
サービスマニュアルにファイルして使用してください。

■ SPC Position Adjustment

Equipment Required

HIT Controller <7981-5001-01 or -06>
ROM Pack II for 2092 <7981-5001-74>
Contact Jig-C for HIT <7981-5001-13>
IF Box for HIT <7981-5001-33>
SPC Chart <2078-0002-75; Discontinued>
AF Master Lens <2072-0001-75 or -76>

Preparations

Install the exterior parts other than the Top Cover Assy.
Light up the chart evenly with two flood lamps.

Adjustment

1. Set up the equipment as in Fig. 1.
2. Select "AE ADJ" from the main menu and press the Select Button on the HIT Controller.
3. Select "AE CHECK" from the menu and press the Select Button on the HIT Controller.
4. According to the display, press the Shutter-release Button part way down. (S1 ON)
5. Adjust the position of the FPC SPC Assy so that the difference between the center cell and the others cells is within -1.5EV. (Fig. 2)
   To adjust the SPC position easily, remove the applied adhesive completely when detaching the FPC SPC Assy from the Penta Prism Assy.
   Apply B-20 to designated position as in Fig. 3.
6. Press the Select Button on the HIT Controller to return the main menu.

■ Fig.1

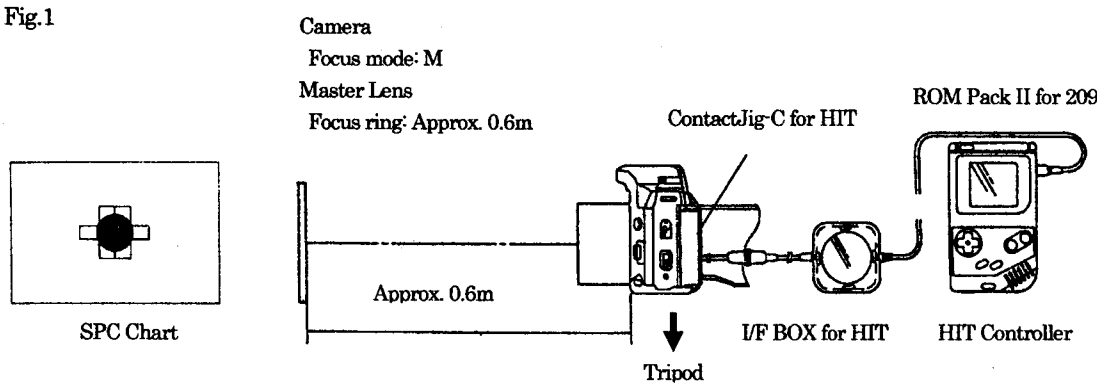

■Align the Spot Metering Circle of the camera with the Black Circle of the chart

■ Fig.2

(Example)

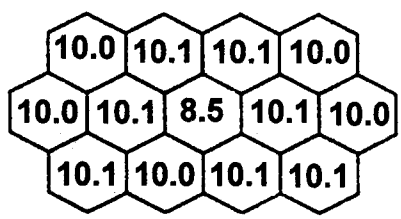

■ Fig.3

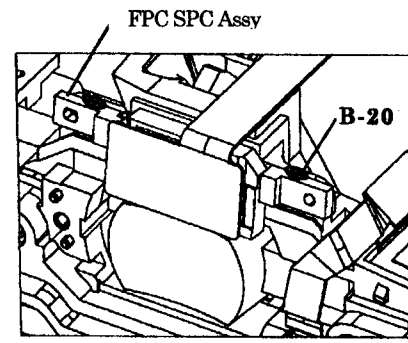

This information should be filed in your service manual.
サービスマニュアルにファイルして使用してください。

Check

1. Set the SPC Chart 0.6m apart from the camera referring to Fig. 1.
   It is unnecessary to connect the HIT System (HIT Contact Jig-C) to the camera.
2. Align the Spot Metering Circle of the camera with the Black Circle of the chart.
   Set the focus mode in MF mode, and Turn the focus ring setting at 0.6m.
   A (Aperture priority) mode or S (Shutter priority) mode is recommended.
3. Ensure that the difference between the spot metering when pressing the Spot Button and the average metering when pressing the Shutter-release Button part way down is within -1.5EV.

■ FPC-SPC Remodeling Technique

1. Unsolder all elements to separate from the #2153 or #2154 FPC-SPC Assy. (Fig. 1)
2. Solder the 20mm length of lead wires to connect the CN-O between the flex of FPC-SPC Assy (Flex-O) and the FPC-A Assy referring the wiring diagram in Fig. 2. (pg. 4)
   Before installing the Top Cover Assy to camera (#2151), be sure to stick the pieces of the Acetate Tape or the pieces of the Polyester Tape to isolate the connecter (CN-O).
   Otherwise, the connecter (CN-O) may short-circuit.

■Fig.1

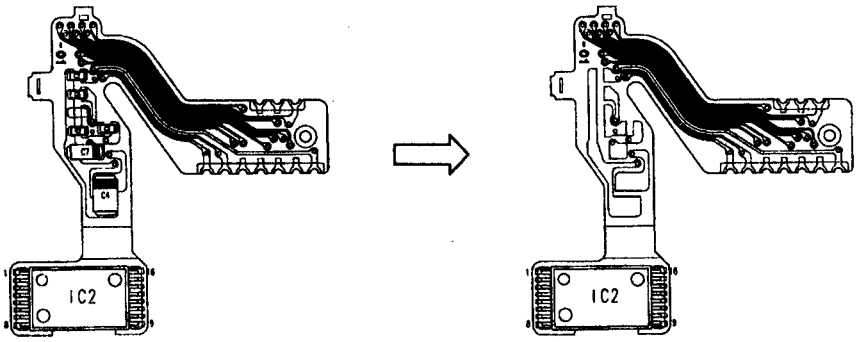

■Fig.2

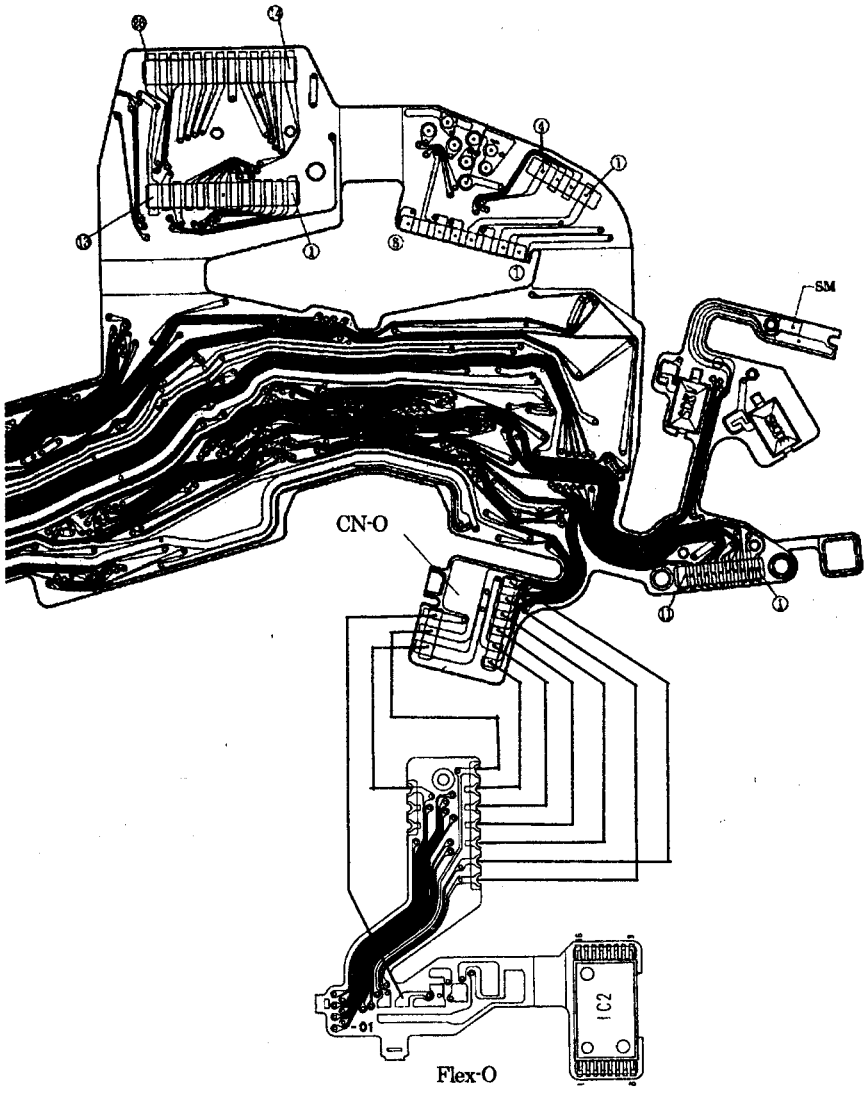

Trouble-shooting chart

1. Introduction

Use this chart to diagnose trouble of the camera. In addition to the trouble-shooting chart, this section includes Map of Electrical Elements, Name of Switches, Timing Chart, and Circuit Diagrams.

2. How to use the chart

*Before starting, if the camera had accessories attached, check the operation with or without the accessories to determine product with problem.

①Trouble-Finding Chart;

First, follow this chart to see the trouble symptom.
And use this chart as the index for Cause Finding Chart.

②Cause-Finding Chart;

See trouble symptom found with the Trouble-Finding Chart and find its cause.
Listed are relevant elements, switches, connectors or wires which are considered to be defective.

*Trouble causes mentioned here are only major ones. Make overall investigation to find other causes.

3. Note

(1)Use Digital Multimeter or a Voltmeter having input impedance of 10MΩ or more to check the voltage.
(2)Use Circuit Tester of 3V or less to check conductivity.
(3)Check carefully for poor soldering or incorrect switch operation; electrical elements themselves (IC, diode, transistor, resistor, or condenser) seldom cause the trouble.
(4)Do not press elements or pull wires strongly.
(5)When checking the voltage at the patterns where switch operates, be careful not to obstruct switch operation nor to scratch the pattern.
(6)Before removing electrical parts, be sure to disconnect Power Supply Adapter.
(7)Use Soldering Iron at the temperature of 290 to 340 ℃. If higher, solder quickly.
(8)When handling ICs, avoid static electricity.
(9)Set DC Power Supply to 5.8V, 2.5A.

CONTENTS page

■Trouble-Finding Chart ..... 2 - 3
■Cause-Finding Chart ..... 4 - 9
■Electrical elements on FPC-A 10
■Map of electrical elements 11-13
■Name of switches 14
■Table of switches 15
■Timing chart 16
■Circuit diagram (overall) 17
■Circuit diagram (Flash Converter PCB) 18

■Trouble-Finding Chart

Follow the chart below to see what is the problem.
※If "HELP" appears in Body Data Panel while following this chart, see "HELP display appears" (P. 9).

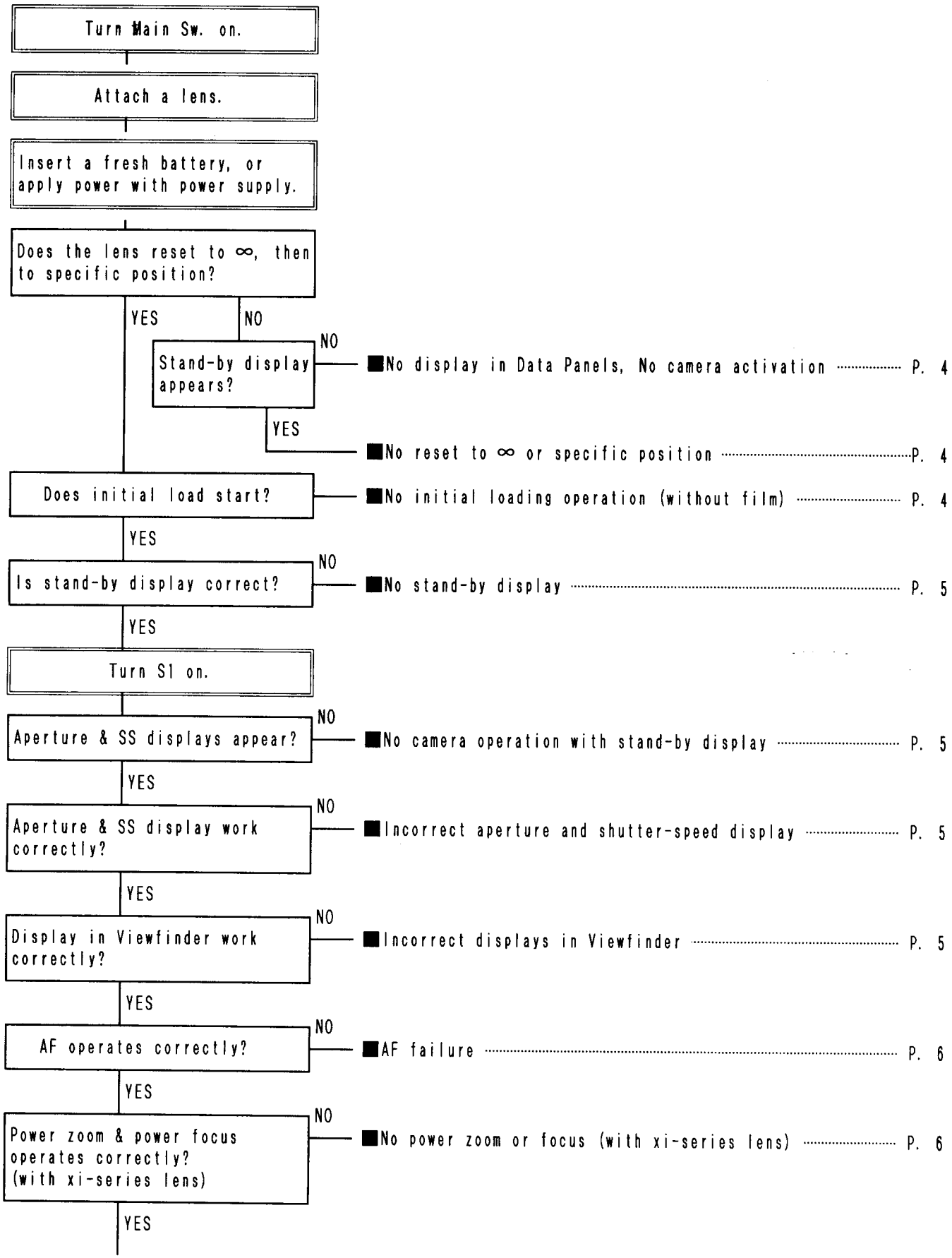

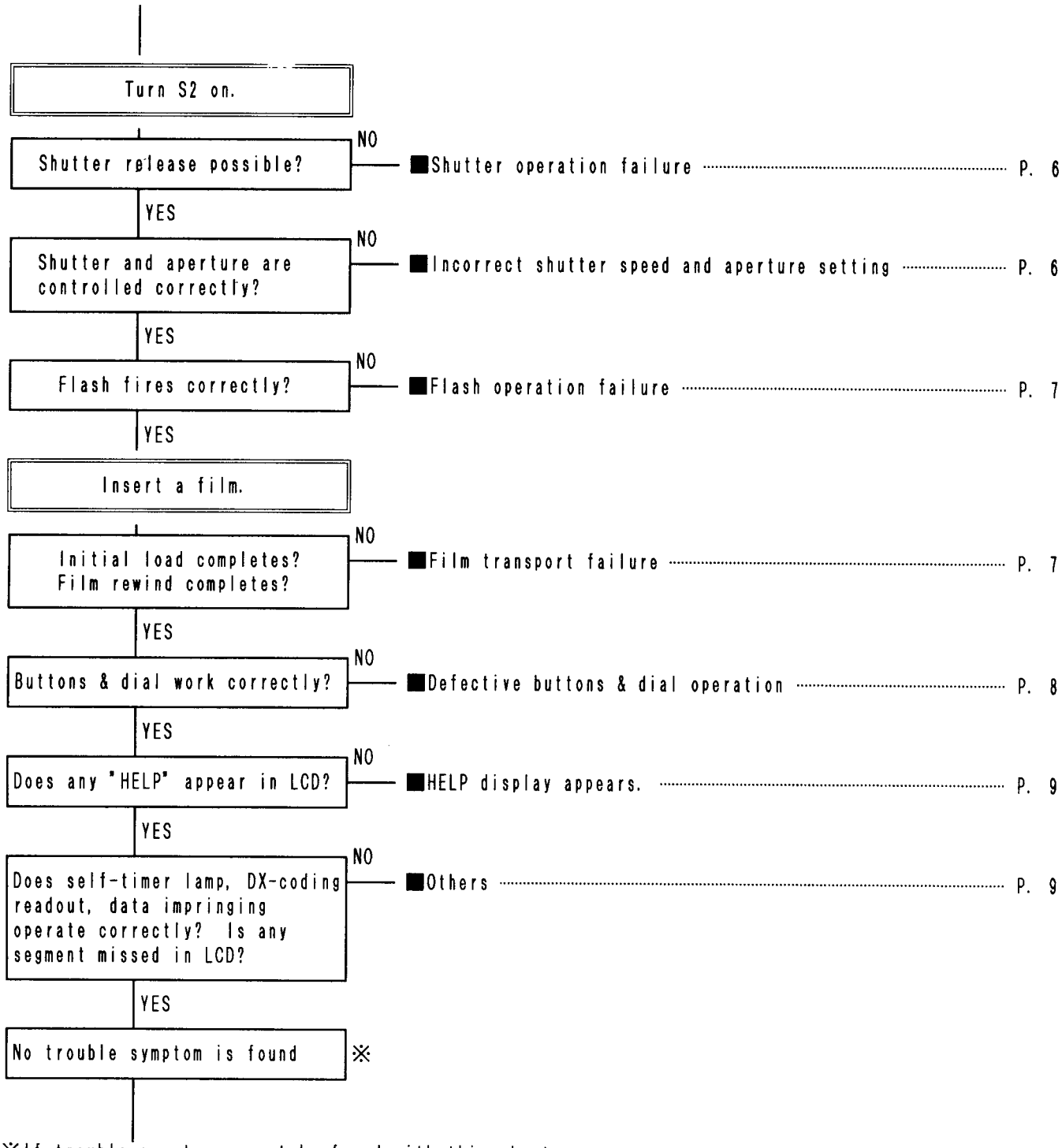

※If trouble symptom cannot be found with this chart,
- Using user's battery and lens, release the shutter about 100 times with a film loaded.
- With camera's lens mount side up or buttom side up, release the shutter to confirm the symptom pointed out by user.

■Cause–Finding Chart

■No display in Data Panels, No camera activation

Symptom	Cause		
	Element	Switch	Connector (CN) Lead wire
Nothing appears in Body and Viewfinder Data Panels, and camera doesn't activate.	(FPC-A) C4, C6, C7, C9, C8, C18, R1, R2, X1 X2	SBAT SM -	Battery contacts (+) (-) CN-FC (2) (8) (9) (11)
Low-battery Indicator blinks, and camera doesn't activate.	(FPC-A) C3, C11, R3, R7, R25, Q3		

■No initial loading operation (without film)

Symptom	Cause		
	Element	Switch	Connector (CN) Lead wire
Initial load operation doesn't start by battery installation (With main Sw. ON, No film)			W17 Winding motor (+) W18 Winding motor (-)

■No reset to ∞ or specific position

Symptom	Cause		
	Element	Switch	Connector (CN) Lead wire
No lens ∞ reset nor specific position reset with any lens attached. Focus mode remains at M. FOCUS. (AF doesn't operate.)	<FPC-A> R6	SLLK	CN-BL (1) – (8) W10 (Gray) W11 (Black) AF motor (+) (-)
No lens ∞ reset nor specific position reset with an xi-lens attached. Focus mode remains at M. FOCUS. (AF doesn't oeprate.)	<FPC-A> R9, R8, Q1, Q2,		CN-BL (3)

■No stand-by display

Symptom	Cause		
	Element	Switch	Connector (CN) Lead wire
No display in Body Data Panel. (Others operate correctly)	(FPC-A) C12, C13, C14, C15, R21		
Shutter Speed and Aperture Display appear, and AF starts operating. (Flash charge starts if it is up.)		S1	
Self-Timer Indicator appears, and camera doesn't operate.		SDRV	
Red-Eye Reduction Indicator appears, and camera doesn't operate.		SPRE	
Only "P" appears, and camera doesn't operate.		SPGM	
Film rewind starts, then "0" appears in frame counter with blinking film cartridge mark.		SREW	

■No camera operation with stand-by display

Symptom	Cause		
	Element	Switch	Connector (CN) Lead wire
No camera activation with stand-by display on Body Data Panel.		S1	CN-FC (3)
AF motor runs idle with stand-by display.	(FPC-A) C25		

■Incorrect aperture and shutter-speed display

Symptom	Cause		
	Element	Switch	Connector (CN) Lead wire
Aperture and Shutter-Speed Displays flicker.	(FPC-A) C3, C4		

■Incorrect displays in Viewfinder

Symptom	Cause		
	Element	Switch	Connector (CN) Lead wire
Back light of Viewfinder Data Panel doesn't light.	(FPC-A) R18		CN-K (19)

■AF failure

Symptom	Cause		
	Element	Switch	Connector (CN) Lead wire
Lens moves in small steps.	(FPC-A) C22, C23, R17		CN-G (1) (2) (3) CN-FC (7)
Focus isn't confirmed. Lens keeps scanning for low-contrast.	(FPC-A) D2		CN-B (1) (3) (7) (8)

■No power zoom or focus (with xi-series lens)

Symptom	Cause		
	Element	Switch	Connector (CN) Lead wire
Manual power zoom and power focus are impossible.			CN-BL (1)

■Shutter operation failure

Symptom	Cause		
	Element	Switch	Connector (CN) Lead wire
Shutter release is impossible		S2	W17 Winding motor (+) W18 Winding motor (-)

■Incorrect shutter speed or aperture setting

Symptom	Cause		
	Element	Switch	Connector (CN) Lead wire
No slit shutter			W4 (Red) W6 (Yellow)
Incorrect shutter speed of 1/60 sec. or faster			W5 (Brown)
Aperture stops down and HELP appears.	(FPC-A) C10	SFP	CN-F (4)
Aperture always set to fully-open position	(FPC-A) C24		

■Flash operation failure

Symptom	Cause		
	Element	Switch	Connector (CN) Lead wire
Flash doesn't fire			W25 (Yellow) W28 (Orange) W29 (Blue) W30 (Yellow) W31 (Gray) W41 W42 CN-FC (6) (4)
Pre-flash fires, but main flash doesn't fire.	(FPC-A) R5		W7 (Purple) W8 (Black)
Flash output is less than required.	(FPC-A) R10		
Flash always fully fires.	(FPC-A) C19		Shield wire
Dedicated flash doesn't fire. (Others operate correctly.)			W21 (Purple) W24 (Black)
Dedicated flash doesn't fire, and camera doesn't operate.			W23 (Orange)
Flash doesn't fire by manual fill-flash.		SFLAV	CN-N (1) (2)
Flash charge doesn't start.		SFLUP	

■Film transport failure

Symptom	Cause		
	Element	Switch	Connector (CN) Lead wire
Initial load doesn't start.		SRC	CN-D (3)
Initial load always fails.	(FPC-A) Q4, D3		CN-P (1) – (4)

■Defective buttons & dial operation

Symptom	Cause		
	Element	Switch	Connector (CN) Lead wire
Focus Mode Button doesn't work.		SRAF SAFM	CN-D (6) CN-M (6) W9 (Brown)
Aperture/Flash-Control Button doesn't work.		SFLAV	CN-N (2)
Rewind Button doesn't work.		SREW	CN-D (4) (5)
Display doesn't change according to Control Dial.			CN-DL (1) – (5)
Exposure Compensation Button doesn't work.		SOVR	CN-N (3) (4)
Mode Button doesn't work.		SMODE	
Drive-Mode/Self-Timer Button doesn't work.		SDRV	
Red-Eye-Reduction Button doesn't work.		SPRE	W14 (Brown) W16 (Blue)
Program-Reset Button doesn't work.		SPGM	W13 (Gray) W14 (Brown)
Command Switch doesn't work.		SPT	W12 (Black) W15 (Green)
Spot Button doesn't work.		SSPOT	W19 (Orange) W20 (Black)

■HELP display appears.

Symptom	Cause		
	Element	Switch	Connector (CN) Lead wire
HELP appears at battery installation.	(FPC-A) R17, C26		CN-FC (1) (5) (10) CN-O (1) – (9)
HELP appears at lens reset.			CN-O (3)
HELP appears at S1 on.	(FPC-A) C27, C29, R22, R23		CN-FC (12) CN-B (2) (4) (5) (6) (9) (10)
HELP appears after shutter release.	(FPC-A) C25, R4, R16, R19, R20	SFP	CN-F (4) (6) (7)
After shutter release, mirror goes up and down several times, then HELP appears.		SLOAD	CN-M (1) (2) (3) CN-F (2) (3) (5)
HELP appears at S2 on.	(FPC-A) R25		
Aperture is always set to stop-down position, and HELP appears.	(FPC-A) C10	SFP	CN-F (4)

■Others

Symptom	Cause		
	Element	Switch	Connector (CN) Lead wire
Self-Timer Lamp doesn't light.	(FPC-A) R18		
Missing segments in Data Panels			CN-K (1) – (26)
Mis-readout of DX-coding	(FPC-A) R11, R12		CN-D (7) – (11)
No data imprinting			CN-M (4) (5)
Data imprinting position doesn't change between panorama/normal.			CN-D (1) (2)

Electrical elements on FPC-A

FPC-A ASSY

Element	Location
C2	C-3
C3	D-3
C4	C-3
C5	D-3
C6	C-5
C7	C-5
C8	D-5
C9	D-5
C10	C-3
C11	C-4
C12	C-4
C13	C-4
C14	C-5
C15	C-4
C16	D-6
C17	C-6
C18	D-6
C19	D-7
C22	C-3
C23	C-7

Element	Location
C24	C-7
C25	D-3
C26	D-3
C27	D-3
C28	C-3
C29	D-7
D1	C-3
D2	D-3
D3	C-7
LD1	C-6
X1	D-5
X2	C-4
Q1	C-4
Q2	C-3
Q3	C-7
Q4	D-7
R1	D-4
R2	D-4
R3	C-3
R4	C-3

Element	Location
R5	C-3
R6	B-4
R7	C-4
R8	C-3
R9	C-3
R10	D-7
R11	C-3
R12	C-3
R16	D-7
R17	C-3
R18	D-6
R19	C-7
R20	C-5
R21	C-5
R22	D-3
R23	D-3
R24	C-4
R25	C-7

■Map of electrical elements (FPC–A Assy; electrical–elements mounting side)
■素子配置図 (A フレキセット：表面)

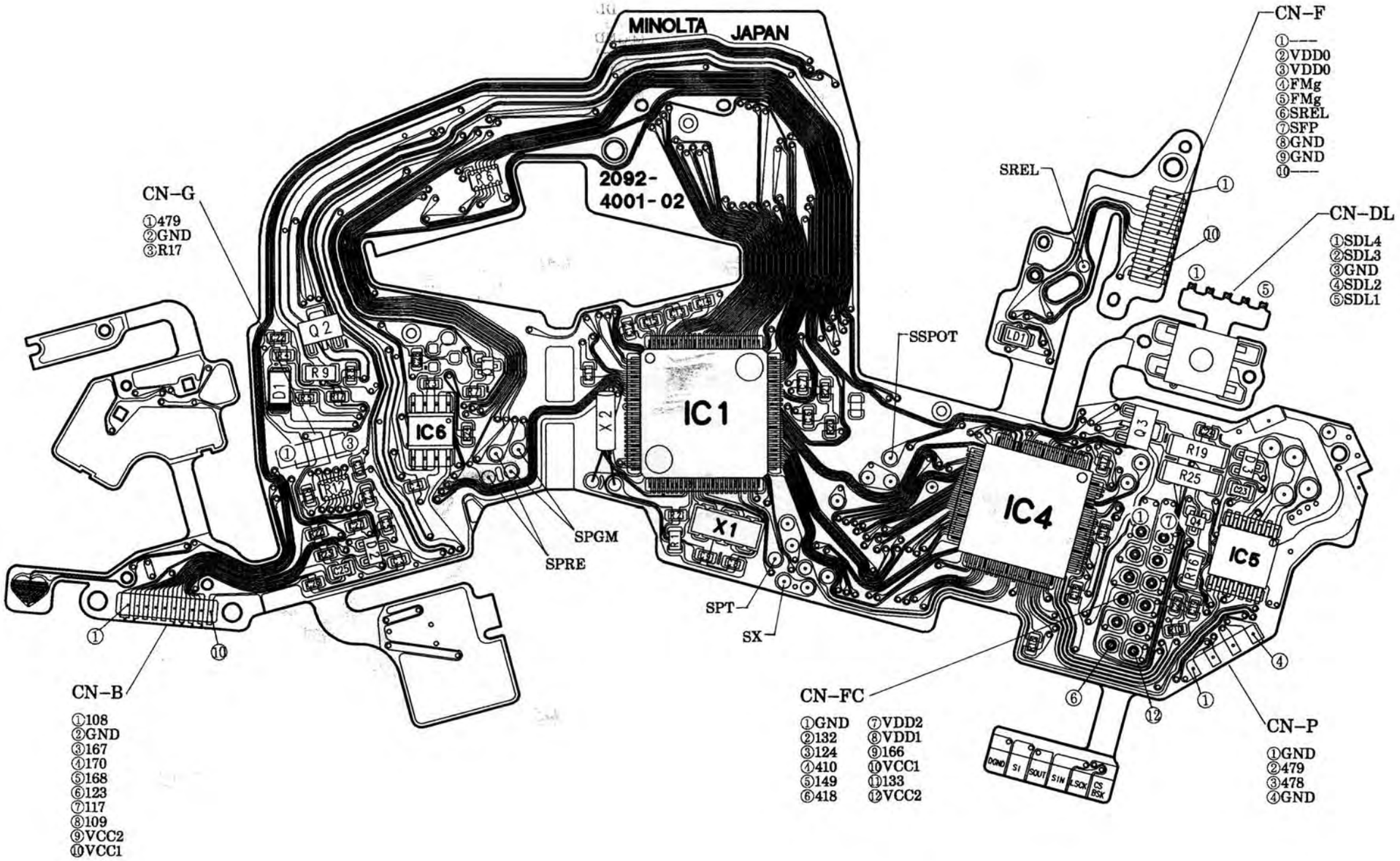

コネクター部(CN)の3桁の数字は、ICの端子番号を表しています 例) 1 23 IC–1 の23番端子 └端子NO. └IC NO.	The numbers of three figures represent the terminal No. of IC. EX) (1 23) Terminal 23 of IC–1 └Terminal No. └IC No.

■Map of electrical elements (FPC-A Assy)
■素子配置図 (A フレキセット：裏面)

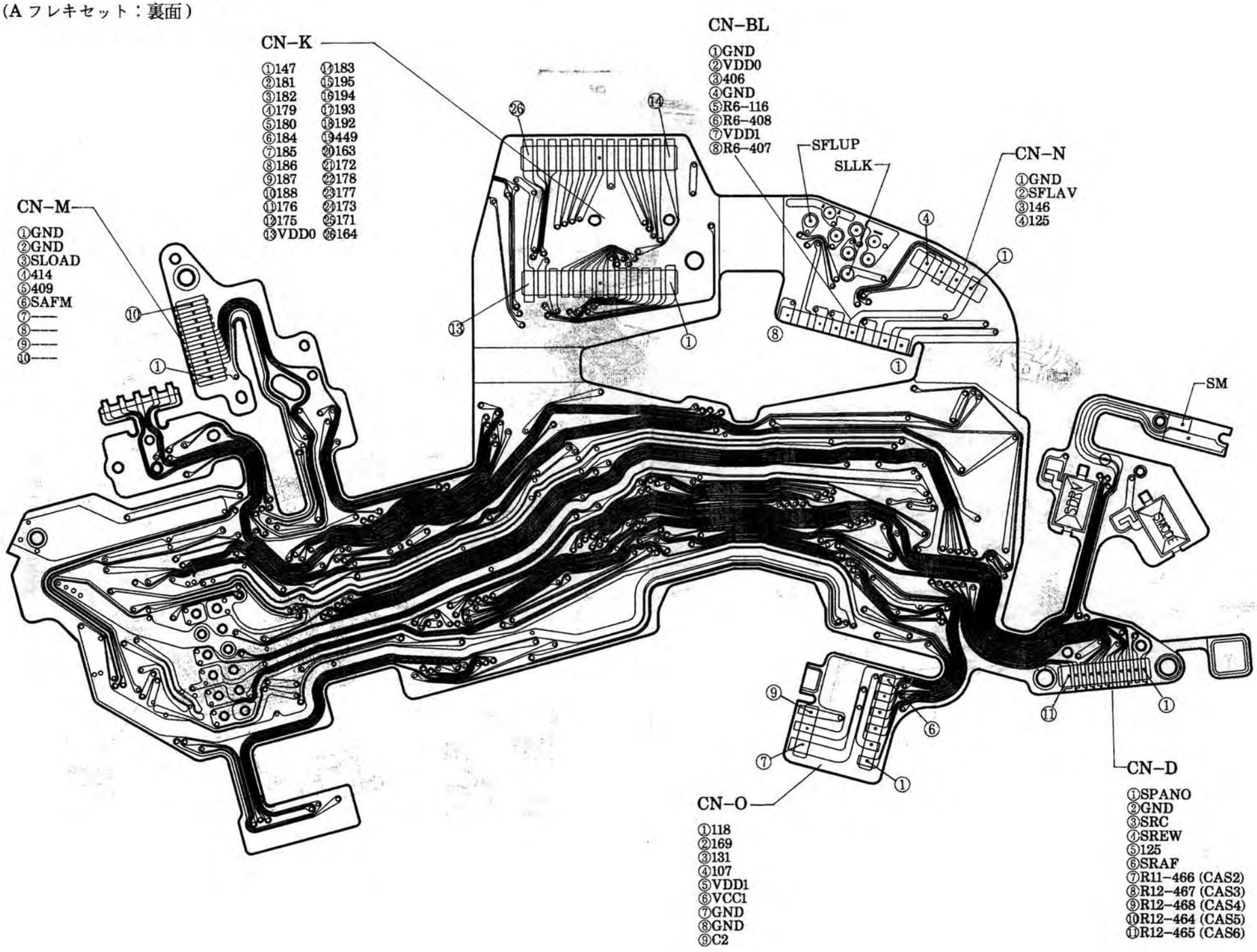

■Map of electrical elements (Flash Converter PCB Assy)
■素子配置図（フラッシュコンバーター基板セット）

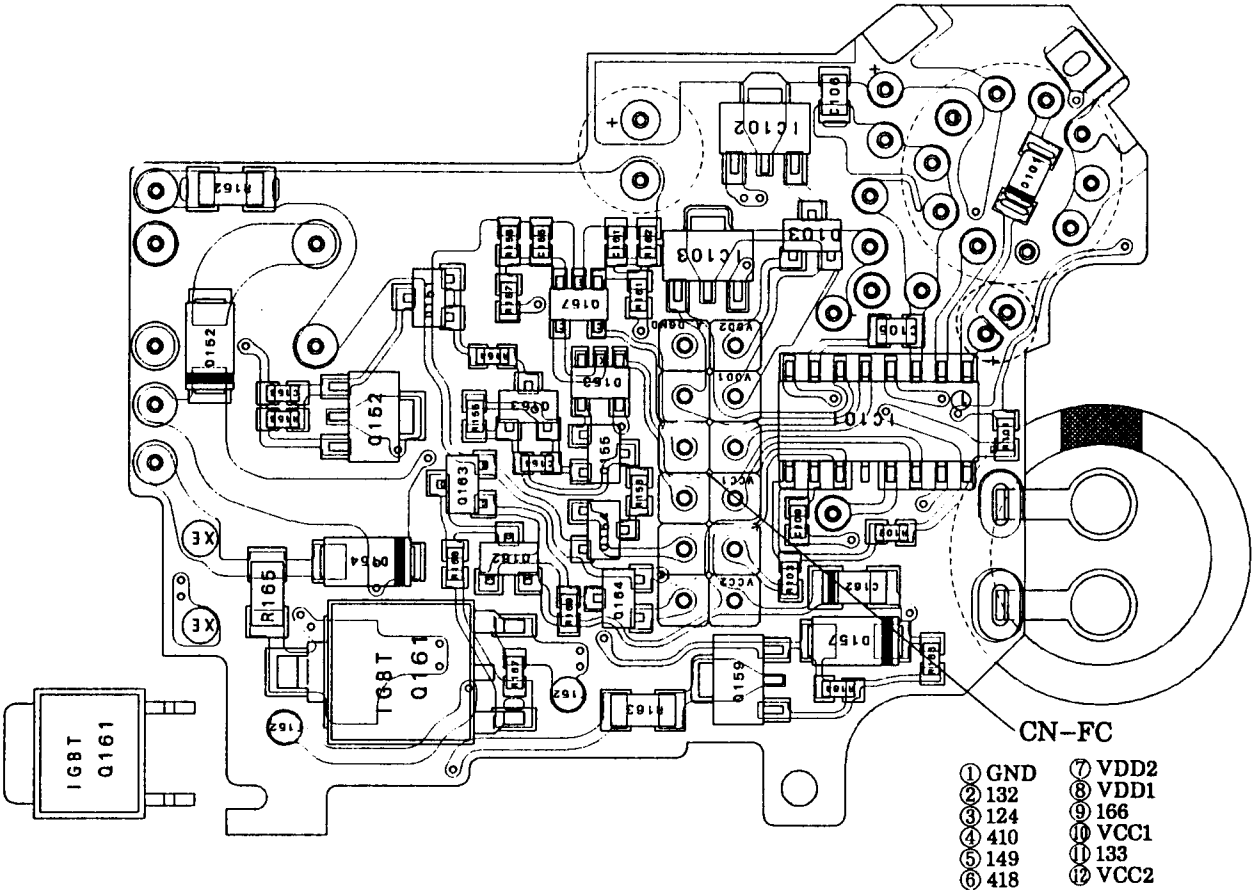

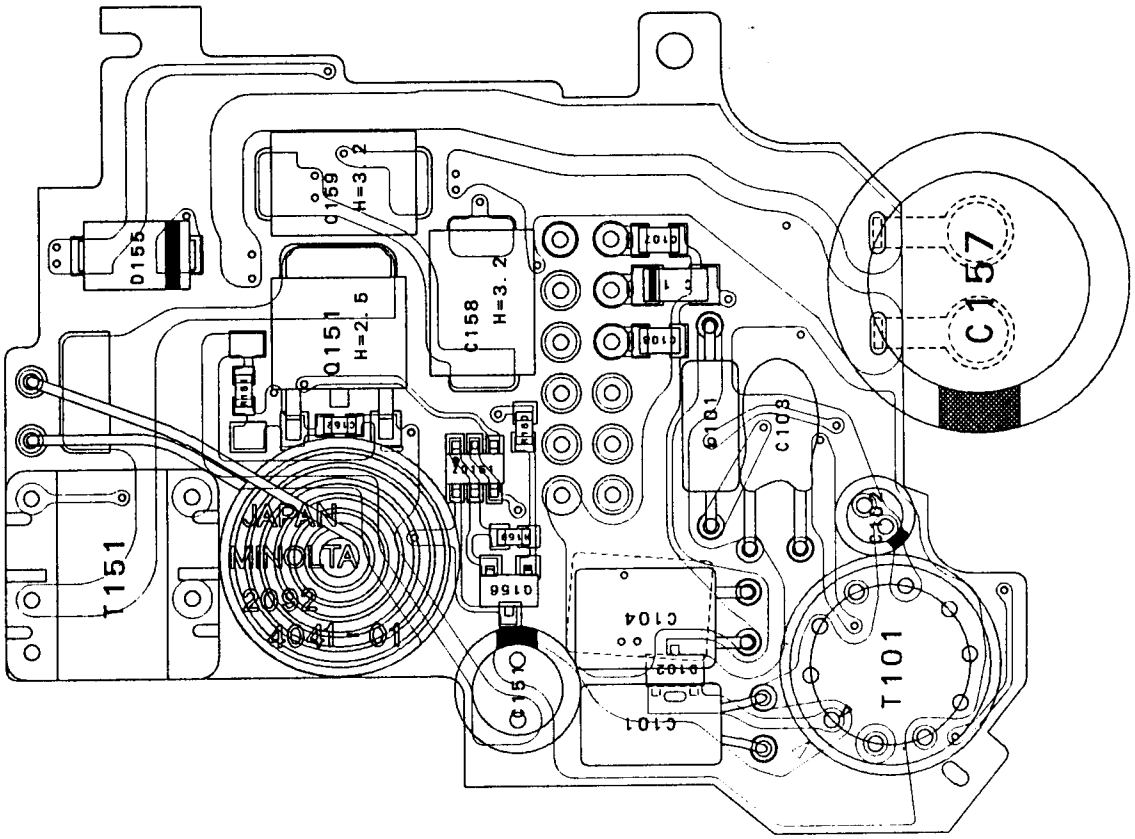

Name of switches

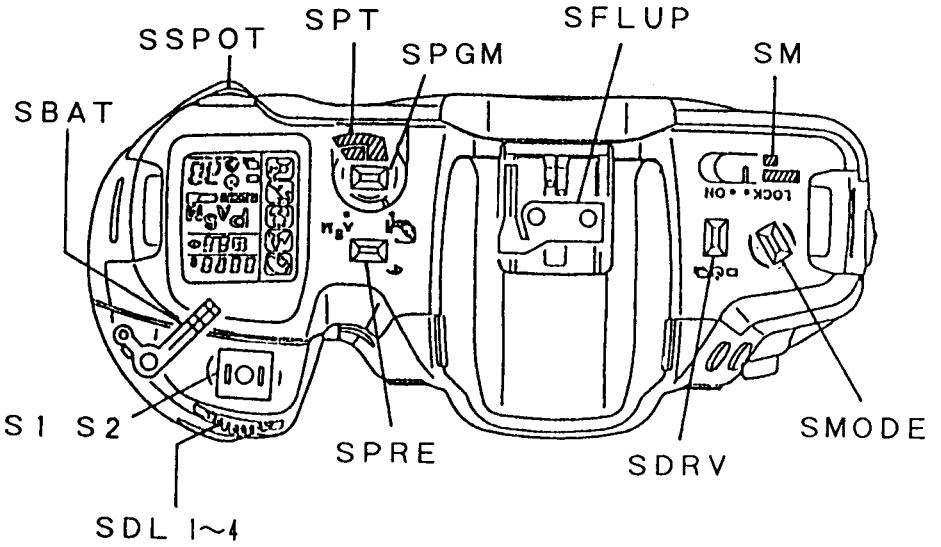

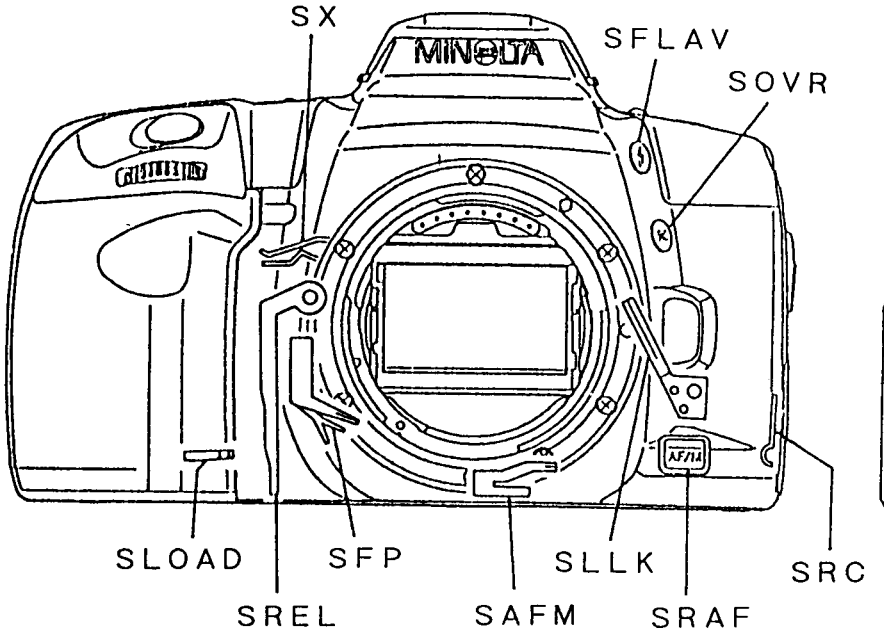

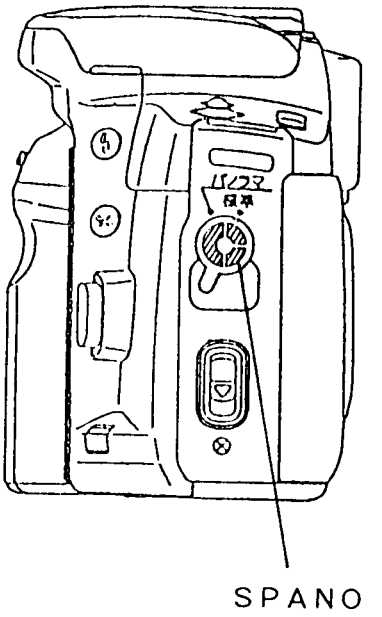

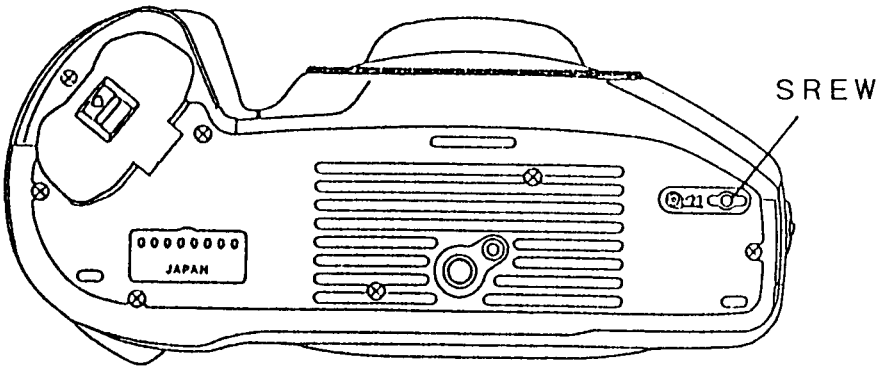

Table of switches

Symbol	Description	Function	Operation
SM	Main Sw.	Activates/locks camera's function	ON by sliding Main Switch to ON
S1	Metering Sw.	Activates metering, focusing, indication	ON by pressing Shutter-Release Button partway down
S2	Release Sw.	Starts shutter-release	ON by pressing Shutter-Release Button all the way down
SPT	S/C Sw.	Selects subject-program/exposure mode	ON by sliding Command Switch to subject-program mode
SPGM	Program Sw.	Resets camera to P mode	ON by pressing Program-Reset Button
SMODE	Mode Sw.	·Selects mode in subject-program/ exposure mode ·Selects film-speed when used with Drive-mode Sw.	·ON by pressing Mode Button (Set with Control Dial) ·Set by pressing Drive-Mode and Mode Buttons while turning Control Dial.
SDRV	Drive-mode Sw.	·Selects self-timer/drive mode ·Selects film-speed when used with Mode Sw.	·ON by pressing Self-Timer/Drive Mode Button (Set with Control Dial) ·Set by pressing Drive-Mode and Mode Buttons while turning Control Dial.
SREW	Rewind Sw.	Starts film rewind	ON by pressing Rewind Button
SOVR	Override Sw.	Sets exposure compensation value	ON by pressing Exposure-Compensation Button (Set with Control Dial)
SSPOT	Spot metering Sw.	·Selects spot metering ·For P, A, S mode flash, selects slow shutter sync.	ON by pressing Spot Button
SPRE	Red-eye reduction Sw.	·Sets/Cancels pre-flash, ·Sets/Cancels wireless flash	ON by pressing Red-Eye Reduction Button
SFLAV	Flash-control & Aperture Sw.	·Sets fill-flash in P mode ·Sets aperture in M mode	·ON by pressing Flash-control/ Aperture Button. ·Set with Control Dial
SFLUP	Flash position Sw.	Detects flash position	ON during bult-in flash is up.
ARAF	Focus mode Sw.	Changes focus mode	ON by pressing Focus-Mode Button
SAFM	AF/M detect Sw.	Detects focus mode status	ON: Manual mode, OFF: AF mode
SLLK	Lens-lock Sw.	Detects lens existence	OFF during lens attached
SRC	Back-cover Sw.	Detects back-cover status Activates initial load	OFF during back-cover is closed.
SREL	Release detect Sw.	Detects mirror up start or mechanical charge completion	ON at mirror up start, OFF at mechanical charge completion
SLOAD	Mech.-position detect Sw.	Detects winding completion or mirror charge completion	ON during mechanical charge, OFF at mechanical changeover
SFP	Aperture pulse Sw.	Detects aperture-stop-down position	ON/OFF according to aperture ring position
SX	Sync. Sw.	Triggers flash	ON at 1C traverse completion, OFF at film advance start
SDL1 to 4	Dial Sw.	Changes mode settings	ON/OFF by turning Control-Dial
SBAT	Battery Sw.	Resets IC1	OFF during battery installed
SPANO (*)	Panorama Sw.	Changes normal/panorama mode setting	OFF by sliding Panorama Switch to PANORAMA

*SPANO: Only for Panorama models (-600)

■Timing chart

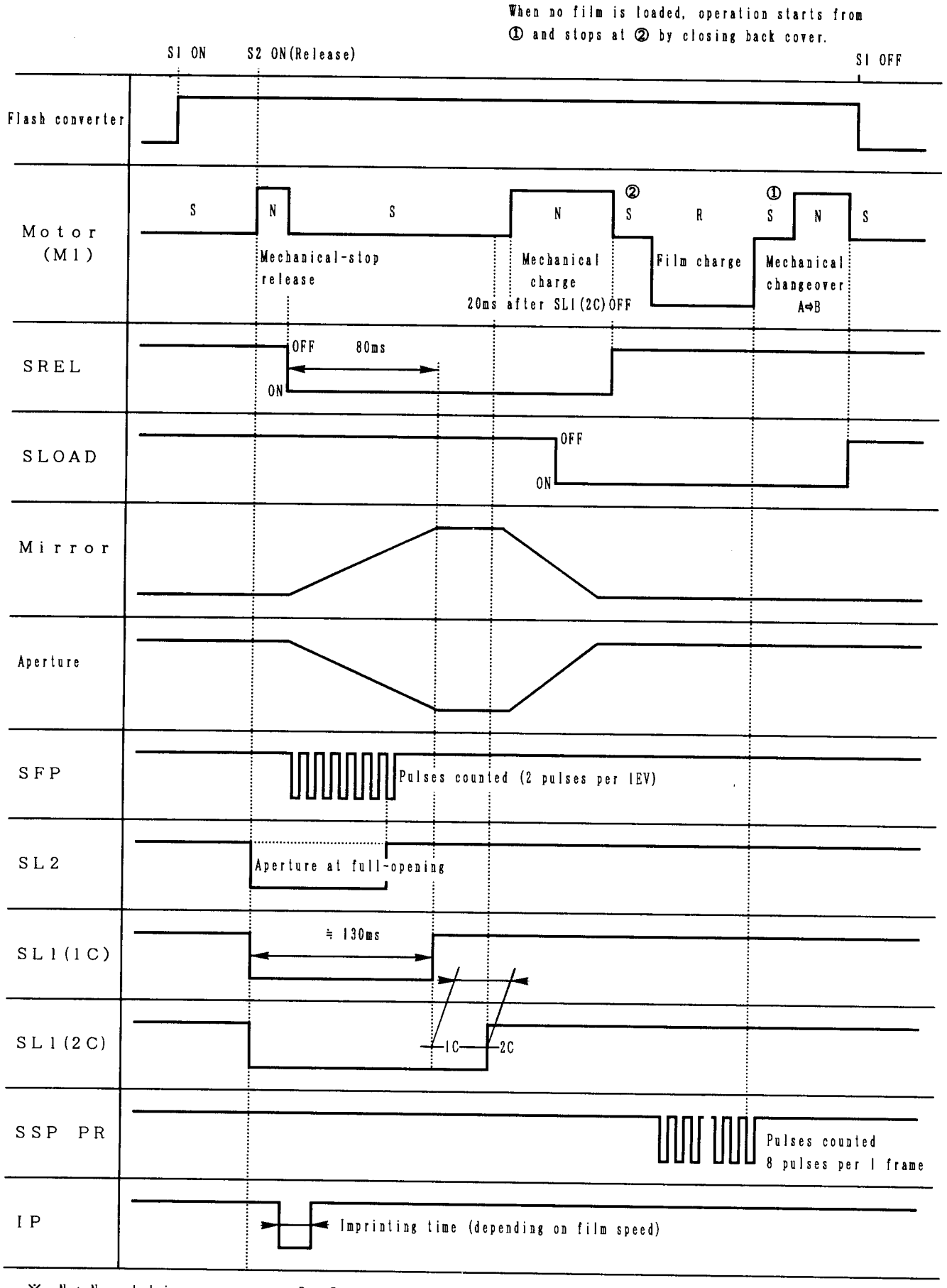

※ N : Normal drive R : Reverse drive S : Drive stop

■Circuit diagram
■回路図

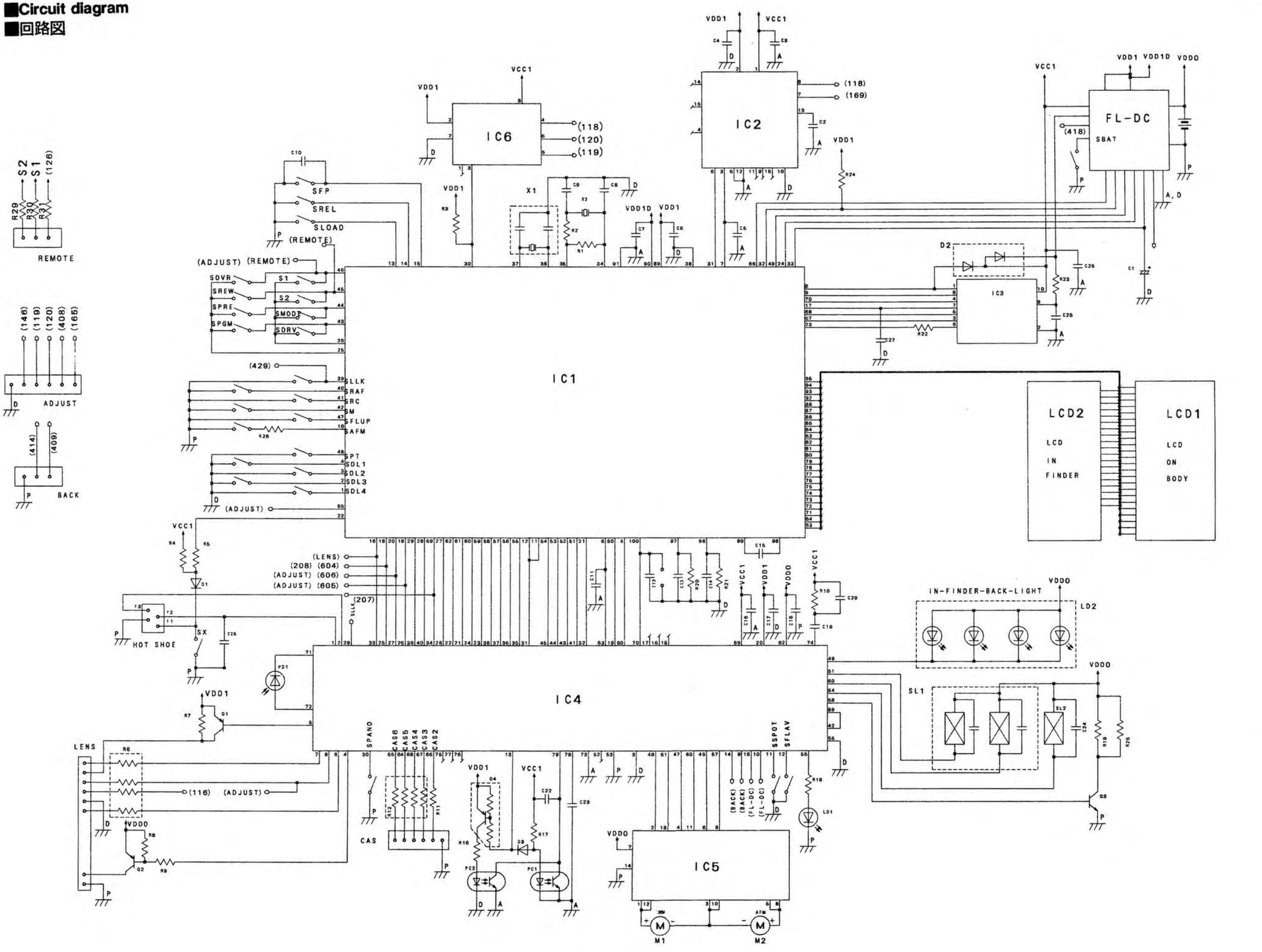
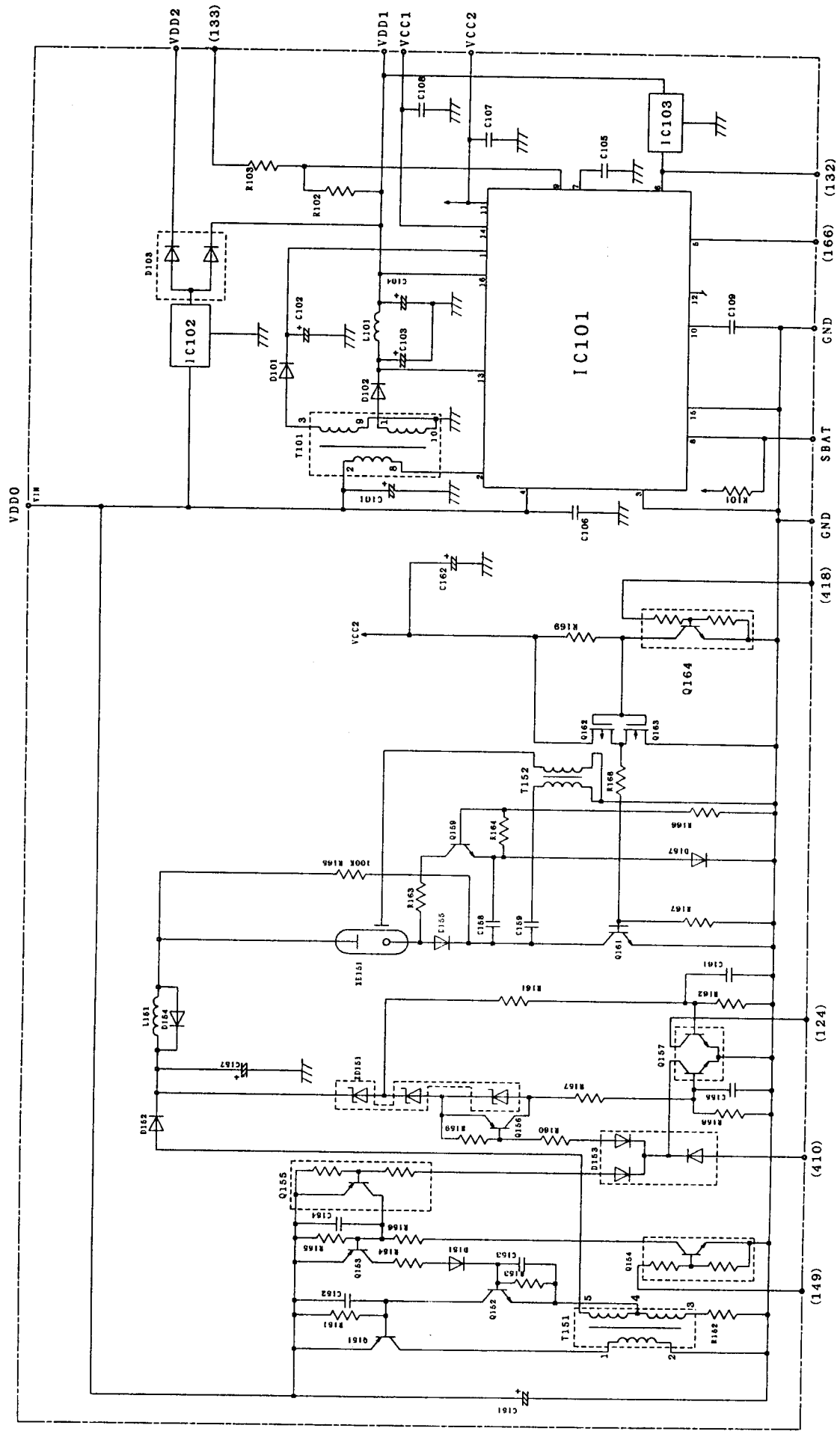
■Circuit diagram (Flash Converter PCB)
■回路図（フラッシュコンバーター基板）